CITY OF KOTZEBUE
PRELIMINARY ENGINEERING REPORT
WATER TREATMENT PLANT IMPROVEMENT STUDY

FINAL REPORT

Prepared for:

City of Kotzebue
PO Box 46
Kotzebue, Alaska 99752

USDA- RD
800 W. Evergreen, Suite 201
Palmer, Alaska 645

Prepared by:

GV Jones & Associates, Inc.
WATER AND WASTEWATER PROCESS ENGINEERS
1200 E 76th Avenue, Unit 1207
Anchorage, AK 99518
(907) 346-4123

In Association with:

R&M CONSULTANTS, INC.
R&M Consultants, Inc.
9101 Vanguard Dr.
Anchorage, AK 99507
(907)522-1707

August 2011

TABLE OF CONTENTS

List of Tables ..... **iii**
List of Figures ..... **iv**
Abbreviations ..... **v**
1.0 Introduction **2**
1.1 Project Background 2
1.1.1 Project Scope 2
1.1.2 Location and Planning Design Horizon 3
1.2 Planning Process 3
1.3 Water Treatment Plant Project Development Summary 3
2.0 Community Information and Project Description **9**
2.1 Community Information 9
2.1.1 Location and Access 9
2.1.2 Economy and Transportation 9
2.1.3 History and Culture 10
2.1.4 Population and Demographics 10
2.1.5 Population Projections 11
2.2 Environmental Conditions and Natural Resources 13
2.2.1 Climate 13
2.2.2 Geology and Soil Conditions 14
2.2.3 Water Resources 14
2.2.4 Wildlife and Vegetation 14
2.2.5 Flood Hazard 15
2.2.6 Seismic Hazard 15
2.3 Land Status and Ownership 15
2.4 Electricity and Fuel 15
2.5 Community Equipment and Resources 15
2.6 Community Economy and Financial Profile 17
2.7 Public Administration 17
3.0 Existing Water Treatment System **22**
3.1 Background Kotzebue Water Source and Treatment History 22
3.1.1 Initial Improvement Efforts 22
3.1.2 City Improvements to Water Treatment 24
3.1.3 City Improvements to Water Source 25
3.2 Description and Condition of Existing Water System 25
3.2.1 Water Source 25
3.2.2 Water Treatment and Storage 26
3.2.3 Water Distribution 27
3.3 Previous Pilot Study Reports 27
3.4 Existing Water Quality and Water Treatment Performance 29
3.5 Financial Status of Existing Facilities 37
4.0 Regulatory Requirements, Design Criteria, and Treatment and Performance Objectives **41**
4.1 Current and Proposed Regulatory Requirements 41
4.1.1 Regulatory Requirements for Water Systems 41
4.2 Design Criteria 49
4.2.1 Environmental Design Criteria 49
4.2.2 Water Use and Water Plant Flows 49

4.2.3 Water Treatment Design Criteria 52
4.2.4 Disinfection By-Products Treatment and Control 52
4.2.5 Water Treatment and Performance Objectives 54
5.0 Need for Project 57
5.1 Project Need 57
5.2 Health, Sanitation, and Security 57
5.3 System Operation and Maintenance 58
5.4 System Growth Capacity 58
6.0 Alternative Development, Analysis, and Recommendations 60
6.1 No Action Alternative 60
6.2 Upgrading the Existing Water Treatment Plant 60
6.2.1 New Dual Membrane Treatment System 64
6.3 Water Treatment Process Alternatives 64
6.3.1 Conventional Filtration--Enhanced Coagulation (Package Water Treatment) 64
6.3.2 Direct Filtration--Pressure Filters 66
6.3.3 Ion Exchange (MIEX and Conventional or Direct Filtration) 68
6.3.4 Membrane Filtration (Microfiltration/Nanofiltration) 69
6.3.5 Alternate Water Source (Sea Water / Shallow Well/ Reverse Osmosis) 72
6.3.6 Dissolved Air Flotation (DAF) Pre-treatment 74
6.3.7 Alternative Disinfection 75
6.4 Water Treatment Manufacturers' Recommendations 76
6.4.1 Gravity Conventional Filtration—Package Plant (Tonka Equipment Corporation) 77
6.4.2 Gravity Conventional Filter with GAC Media—Package Plant (Roberts Water Technologies) 77
6.4.3 DAF-Conventional Filtration-Nanofiltration (Corix Water Systems) 78
6.4.4 Oxidation—Immersed Membrane Ultrafiltration (GE Z-Box (Zenon)) 79
6.4.5 Oxidation—Membrane Microfiltration (Pall Corporation Aria AP system) 81
6.4.6 Microfiltration/Nanofiltration (Pall Corporation AP System) 82
6.5 Lead and Copper Treatment and Control 83
6.6 System Classification and Operator Considerations 84
6.7 Comparative Concept-Level Costs 85
6.7.1 Water Treatment Plant Capital Costs 85
6.7.2 Water Treatment Plant Operation and Maintenance Costs 86
6.7.3 Present Worth Analysis 87
6.8 Water Treatment Process Selection 88
7.0 Conclusions and Recommendations 101
8.0 Selected References 104
9.0 Appendix 106
Appendix A Community Information
Community Profile
Photographs
Flood Hazard Report
Permits and Approvals
Drinking Water Monitoring Compliance
Operator Certification
Water Quality Data
Water Rights
Appendix B Trip Reports and Memorandum
Appendix C Cost Estimates

Capital Cost Estimates
Operation and Maintenance Cost Estimates
Appendix D Calculations
Appendix E Manufacturers' Proposals
Appendix F 2005-2006 Water Treatment Pilot Study Report
Appendix G 2005 Water Treatment Plant Structural Evaluation
Appendix H Water and Sewer Enterprise Financial Reports 2008-2010

List of Tables

Table 2-1: Census Population History 10
Table 2-2: Environmental Criteria 13
Table 2-3: City Equipment 16
Table 2-4 Short-lived Assets and Replacement Costs 17
Table 2-5: Community Contacts 18
Table 3-1: Water Treatment Chemicals and Quantities - 2009 26
Table 3-2: Existing Water Treatment Unit Processes 27
Table 3-3: Source Water Quality Statistics 35
Table 3-4: Current Financial Status – Kotzebue Water and Sewer System 37
Table 4-1: Water Use Unit Quantities 51
Table 4-2: Water Treatment Process Compatibility with Source Water Quality[1] 52
Table 6-1: Water Treatment Process Classification Estimates 84
Table 6-2: Capital Costs for Alternatives 86
Table 6-3: Operation and Maintenance Costs for Alternatives 87
Table 6-4: Alternative Treatment Process Selection Matrix with Criteria Scoring and Weighting 92

List of Figures

Figure 1-1 Project Location and Vicinity Map 5
Figure 1-2 Water Treatment Plant Schematic 6
Figure 1-3 Water Treatment Plant Process Schematic 7
Figure 2-2: Historic Population 11
Figure 2-3: Linear Population Projection 12
Figure 2-1: Location and Vicinity Map 19
Figure 2-4 Water Treatment Plant Site Property Boundary 20
Figure 3-2: Daily Raw Water Turbidity 2007-2009 30
Figure 3-3: Raw Water Turbidity Frequency Distribution 31
Figure 3-4: Daily Raw Water Temperature and pH 32
Figure 3-5: Daily Raw Water Iron 33
Figure 3-6: Daily Raw Water Manganese 34
Figure 3-1: Water Treatment Process Schematic 39
Figure 4-1: TTHM and HAA5 Sample Results 45
Figure 4-2: First-Draw Lead 90th Percentile Values 47
Figure 4-3: First-Draw Copper 90th Percentile Values 47
Figure 4-4: Daily Water Use 2007-2010 51
Figure 6-7: Capital Costs of Water Treatment Process Alternatives 86
Figure 6-8: Alternative Treatment Process Annual Electrical and Chemical Costs 87
Figure 6-9: Present Worth of Alternative Treatment Process 88
Figure 6-10: Alternative Treatment Process Scoring Matrix 93
Figure 6-1: Conventional--Enhanced Coagulation 94
Figure 6-2: Two-stage Direct Filtration 95
Figure 6-3: MIEX and Conventional Treatment 96
Figure 6-4: MIEX and Direct Treatment 97
Figure 6-5: Microfiltration/Nanofiltration 98
Figure 6-6: Sea-Water Reverse Osmosis 99

Abbreviations

AAC	Alaska Administrative Code
ADEC	Alaska Department of Environmental Conservation
AEA	Alaska Energy Authority
AHFC	Alaska Housing Finance Corporation
ANTHC	Alaska Native Tribal Health Consortium
ANCSA	Alaska Native Claims Settlement Act
ATV	all-terrain vehicle
AWWA	American Water Works Associations
CCR	consumer confidence report
CIP	Capital Improvement Program
cfm	cubic feet per minute
cfs	cubic feet per second
CMP	corrugated metal pipe
CPE	comprehensive performance evaluation
COE	Corps of Engineers
CT	concentration time
CWS	community water system
D/DBP	disinfection/disinfection by-products
DBP	disinfection by-products
DCCED	Department of Commerce, Community and Economic Development
DCED	Department of Community and Economic Development
DEC	Department of Environmental Conservation
DIP	ductile iron pipe
DOC	dissolved organic carbon
DOTPF	Department of Transportation and Public Facilities
EDA	Economic Development Administration
EPA	Environmental Protection Agency
ESWTR	Enhanced Surface Water Treatment Rule
fps	feet per second
ft^2	square feet
ft^3	cubic feet
g	acceleration of gravity
gpcpd	gallons per capita per day
gpd	gallons per day
gpm	gallons per minute
GVJ&A	GV Jones & Associates, Inc.
HAA5	haloacetic acid
HDPE	high density polyethylene pipe
hp	horsepower
hr	hour
HUD	Housing and Urban Development
IBC	International Building Code
IHS	Indian Health Service
kg	kilogram

kW	kilowatts
kWh	kilowatt hours
lbs	pounds
LCR	Lead and Copper Rule
LRAA	locational running annual average
MCL	maximum contaminant level
mg/L	milligrams per liter
mL	milliliter
m/s^2	meters per second squared
mph	miles per hour
NTNCWS	Non-transient non-community water system
NTU	nephelometric turbidity units
O&M	operation and maintenance
^oC	degrees Celsius
^oF	degrees Fahrenheit
pcu	platinum cobalt units
PE	polyethylene
PER	preliminary engineering report
pga	pseudo-ground acceleration
pH	negative log of the hydrogen ion concentration
PHS	Public Health Service
POTW	public owned treatment works
psi	pounds per square inch
psig	pounds per square inch gauge
PVC	polyvinyl chloride
na	not applicable
RUBA	Rural Utility Business Advisor
RUS	Rural Utility Service
SCADA	supervisory control and data acquisition
SDWA	Safe Drinking Water Act
SNC	Significant Non-compliers
SWTR	Surface Water Treatment Rule
TDH	total dynamic head
THM	trihalomethanes
TNCWS	transient non-community water system
TOC	total organic carbon
TSS	total suspended solids
TTHM	total trihalomethanes
UBC	Uniform Building Code
ug/L	micrograms per liter
USDA	US Department of Agriculture
UV	ultraviolet light
VSW	Village Safe Water
vfd	variable frequency drive
WTP	water treatment plant
yd^3	cubic yard

Section 1

Introduction

1.0 Introduction

The City of Kotzebue (City) has commissioned the completion of a Preliminary Engineering Report (PER), following the US Department of Agriculture Rural Utilities Services (RUS) format, to evaluate current conditions and develop alternatives to upgrade and improve the water treatment plant for the City. The following sections summarize the project background, the scope of work, the process that was used in developing the report, and a water treatment plant development summary.

1.1 Project Background

The City of Kotzebue received a state planning study grant from the State of Alaska through the Alaska Department of Environmental Conservation (ADEC) with funds from the state and RUS for completion of a Preliminary Engineering Report (PER) and Environmental Assessment. The existing city of Kotzebue water treatment plant was initially constructed in the early 1970s and has undergone several upgrades and expansions over the years as the city demand has increased. In spite of the efforts of the operations staff, the treatment process is not in compliance with the revised drinking water standards for disinfection by-products. As such, upgrade or replacement of the treatment process with more modern equipment located in a new water treatment building is necessary for the City to provide safe and reliable drinking water to the residents of the community for now and into the future.

1.1.1 Project Scope

The scope of work for this study was developed by the City and consisted of a series of tasks which included the following items:

- Identify and evaluate the existing condition and operation of the water treatment process and associated facilities.
- Develop planning criteria to summarize background information, water quality data, water treatment performance information, regulatory compliance, and current condition assessment of the water treatment process and water plant.
- Summarize source water quality and treated water quality data and develop water treatment and design requirements for a new water treatment process and plant.
- Summarize the condition of the existing facilities based on available file information, record drawings, operator performance data, a site visit, and regulatory compliance information.

- Prepare a narrative justification for the water treatment plant upgrade or replacement and an alternative analysis. Develop alternative upgrade or replacement efforts that enable the plant to meet federal and state drinking water requirements.
- Complete an alternative analysis to consider both cost and non-cost evaluation criteria including capital, operation and maintenance, and life-cycle costs. Non-cost considerations are to include operational factors, finished water quality, and compatibility with the existing water system infrastructure, along with a recommended plan to proceed to design and construction.
- Prepare a summary report including configurations of alternatives, advantages and disadvantages, and cost data.

1.1.2 Location and Planning Design Horizon

A location and vicinity map of the project is shown in Figure 1-1. As specified by the grant-funding agency, the project plan assumes a 30-year design horizon for the proposed facilities.

1.2 Planning Process

The planning process started with an initial meeting held in Kotzebue on June 28, 2010. The meeting introduced the project participants and identified the study goals and objectives. Representatives of the City and the grant-funding agency had the opportunity to review and comment on a draft report. Those comments were used to prepare a final report.

In September 2010 a second site visit was conducted with representatives of the City and grant-funding agencies at which time highlights of the draft report were presented and a discussion of upgrades and improvements to the water treatment process was completed. A draft final report was prepared in September 2010, with review comments received from the City in December 2010 and RUS on March 31, 2011. A follow-up conference call was held on May 12, 2011, to clarify review comments and make final edits. Copies of the review comments and responses are contained in Appendix B.

1.3 Water Treatment Plant Project Development Summary

The water treatment plant is made up of multiple smaller building additions constructed over the course of the last 40 years. The building currently consists of a mix of different types of materials and structural supports with the majority of the structure consisting of metal and wood-frame construction. Past evaluations have identified varying levels of structural problems, concluding that total building replacement would be a more cost-effective solution than continued upgrades and repairs (see LCG, Inc. Mar 2005 in Appendix G and site visit evaluation in Appendix B).

Water quality and quantity information was collected from the operations staff as well as from state and federal regulatory agencies which served as a basis for establishing design parameters and water quality goals. This information was used to develop four alternative treatment technologies, along with the fifth alternative of seawater reverse osmosis (alternative water source). A final option to rehabilitate the existing infrastructure was also reviewed. Advantages and disadvantages of each of the alternatives were developed and are summarized in Section 7. The treatment options included the following:

- Conventional Filtration—Enhanced Coagulation
- Direct Filtration—Pressure Filters
- Ion Exchange (MIEX and Conventional or Direct Filtration)
- Membrane Filtration (Microfiltration/Nanofiltration)
- Alternate Water Source (Sea Water/Shallow Well/Reverse Osmosis)

Manufacturers who specialize in water treatment equipment were contacted for recommendations on equipment selection, preliminary engineering sizing, budgetary prices, and operation and maintenance costs and considerations. Five different treatment processes were proposed:

- Gravity Conventional Treatment-Package Plant (Tonka Equipment Corporation)
- Conventional Treatment with GAC Media-Package Plant (Roberts Water Technologies)
- Dissolved Air Flotation-Conventional Treatment-Nanofiltration (Corix Water Systems)
- Oxidation-Immersed Membrane Ultrafiltration (GE Z-Box (Zenon))
- Oxidation-Membrane Microfiltration (Pall Corporation Aria AP system)
- Microfiltration/Nanofiltration Membrane Filtration

From the information provided by the manufacturers, a schematic layout for each of these processes was used to size a new water treatment building. Estimates on heating and ventilation were included in the analysis. Capital, operation and maintenance, and present-worth analyses were completed for each of the upgrade or replacement alternatives. The review resulted in several processes being comparable in overall costs. As such, a matrix evaluation was used to further screen the options and develop a recommended treatment scheme. Based on this approach, a replacement water treatment plant configured with a microfiltration/nanofiltration membrane filtration process is recommended. The planning-level total construction cost for the new water treatment plant is estimated to be $11.6 million. The annual operation and maintenance cost is estimated to be $560,000. Details and assumptions used to develop these estimates are included in Appendix C. Figures 1-2 and 1-3 are schematics of the recommended plant and treatment processes.

Figure 1-1 Location and Vicinity Map

GV Jones & Associates, Inc.
WATER AND WASTEWATER PROCESS ENGINEERS

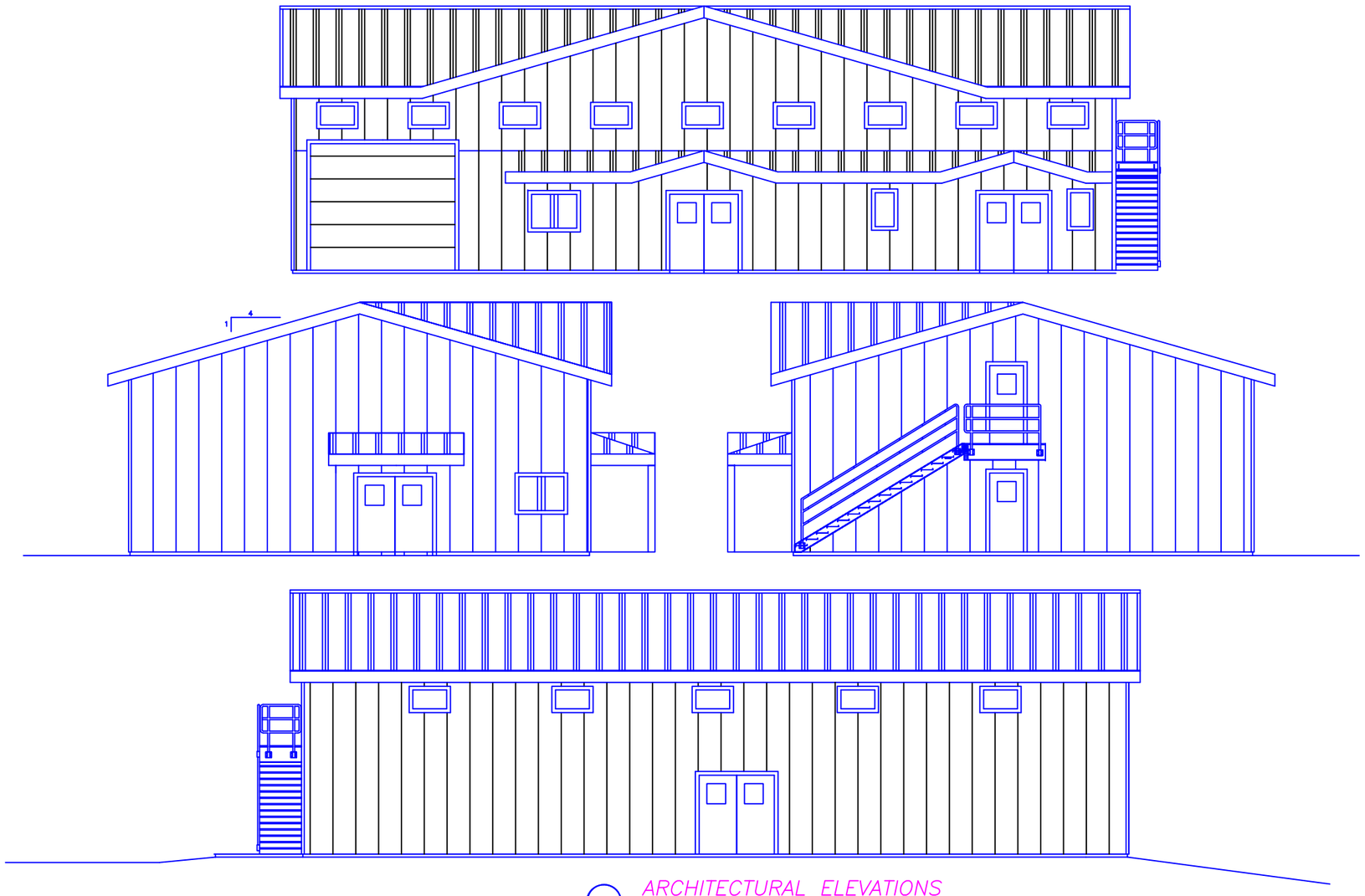

GV Jones & Associates, Inc.
WATER AND WASTEWATER PROCESS ENGINEERS
1200 E 76th AVE.
ANCHORAGE, ALASKA 99518

CITY OF KOTZEBUE
WATER TREATMENT PLANT
REPLACEMENT STUDY

FIGURE 1-2
NEW WATER TREATMENT PLANT
SCHEMATIC

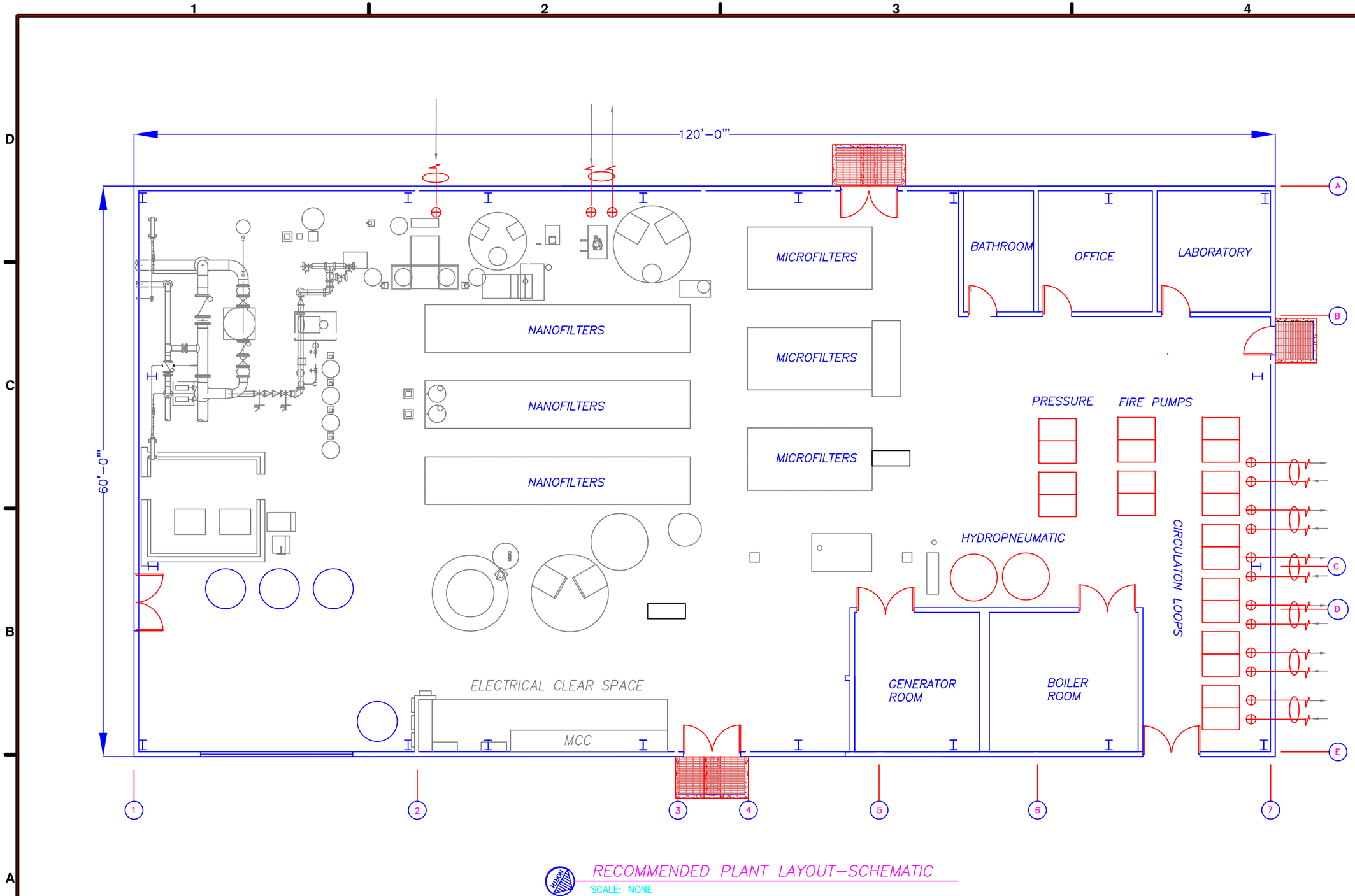

GV Jones & Associates, Inc.
WATER AND WASTEWATER PROCESS ENGINEERS
1200 E 76th AVE.
ANCHORAGE, ALASKA 99518

CITY OF KOTZEBUE
WATER TREATMENT PLANT
REPLACEMENT STUDY

FIGURE 1-3
NEW WATER TREATMENT PLANT
PROCESS SCHEMATIC

Section 2

Project Planning Area

2.0 Community Information and Project Description

2.1 Community Information

The following sections provide information on the City of Kotzebue.

2.1.1 Location and Access

Kotzebue, the largest city in the Northwest Arctic Borough of Alaska, lies on a gravel spit at the end of Baldwin Peninsula in Kotzebue Sound. It is 33 miles north of the Arctic Circle and geographically located at 66°53′50″N and 162°35′8″W. Figure 2-1 is a location and vicinity map of the town.

According to the United States Census, the city has a total area of 28.7 square miles, of which 27.0 square miles is land and 1.6 square miles is water. Kotzebue is a gateway to Kobuk Valley National Park and other natural attractions of northern Alaska and serves as a hub community for many smaller towns in the region.

2.1.2 Economy and Transportation

The majority of income is directly or indirectly related to government employment, such as the school district, Maniilaq Association, the City, and the Borough. The nearby Red Dog Mine is a significant regional employer. Commercial fishing for chum salmon provides some seasonal employment. In 2009, 115 residents held commercial fishing permits.

Most residents rely on subsistence to supplement income: Hunting of moose, caribou, small game, waterfowl, and marine mammals; fishing; and gathering of berries, roots, eggs and other edibles are common. Some income is obtained through the sale of crafts and sewing, and a few jobs are provided by tourism and outsider hunting and fishing.

Air is the primary means of transportation year-round. The state-owned Ralph Wien Memorial Airport supports daily jet service to Anchorage and several air taxis to villages in the area. It has a 5,900-foot-long by 150-foot-wide paved main runway and a 3,876-foot-long by 90-foot-wide crosswind gravel runway. A seaplane base is also operated by the state. The shipping season lasts 100 days, from early July to early October, when the sound is ice-free. Due to river sediments deposited by the Noatak River four miles north of Kotzebue, the town's harbor is shallow. Deep-draft vessels must anchor 15 miles out, and cargo is lightered to shore and

warehoused. Planning for a deep-water port located to the south is underway. During summer, the 26 miles of local gravel road are used by cars, trucks, and motorcycles, while snow machines are preferred in winter.

2.1.3 History and Culture

The site on which Kotzebue rests, known by natives as Kikiktagruk or Qikiqtagruk, which means "almost an island" in Inupiaq, has been occupied by Inupiat Eskimos for at least 600 years. Due to its coastal location near a number of rivers, it was the hub of ancient Arctic trading routes long before European contact. The German Lt. Otto Von Kotzebue "discovered" Kotzebue Sound in 1818 for Russia, and the community was named after Kotzebue in 1899 when a post office was established. Reindeer herding was introduced in the area in 1897. Although Alaska had caribou, the wild form of reindeer, the domesticated reindeer were brought to Alaska from Asia. Since the turn of the century, expansion of economic activities and services in the area has enabled Kotzebue to develop relatively rapidly. The City was formed in 1958, and an air force base and White Alice Communications System were later constructed.

A federally recognized tribe is located in the community--the Native Village of Kotzebue. The population of the community consists of 76.7% Alaska Native or part Native.

2.1.4 Population and Demographics

Kotzebue's population was listed as 3,082 persons in the 2000 Census. Based on 889 occupied housing units, the average household size is 3.47 individuals, and the average family size is 3.93. Table 2-1 summarizes US Census information along with the current estimated population.

Table 2-1: Census Population History

Year	Population		Year	Population
1930	291		1980	2,054
1940	372		1990	2,751
1950	632		2000	3,082
1960	1,290		2010	3,201
1970	1,696			

The recently released 2010 US Census lists the population for the city as 3,201. A graph of this recent historic population from US Census data is shown in Figure 2-2.

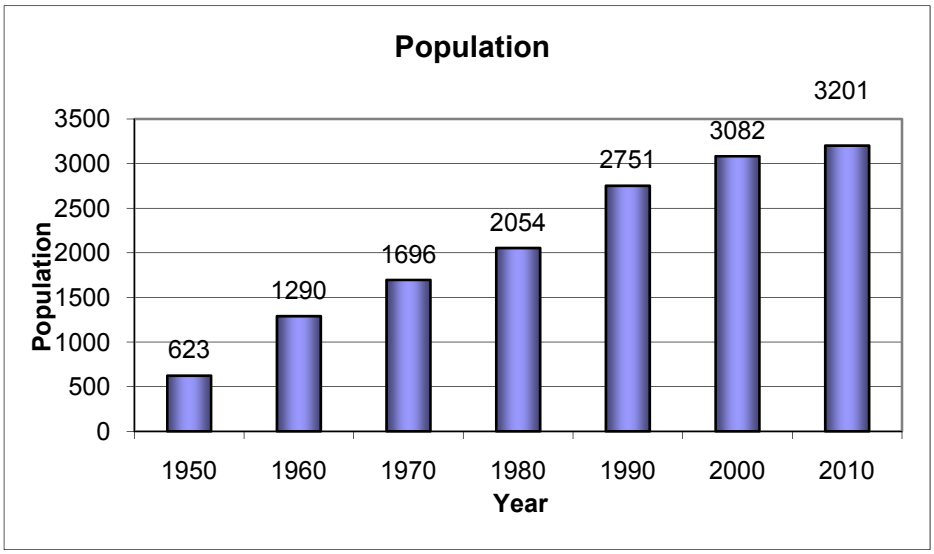

Figure 2-2: Historic Population

2.1.5 Population Projections

Estimates of future population are used to ensure that community sanitation facilities are adequately sized to meet the needs of the users. Predicting the rate of growth for small population groups is very difficult due to uncertainty in conditions and events which would not necessarily impact a larger population group. In order to arrive at a 20-year design population, several methods were considered. The first was a linear extrapolation of the historic population record which shows an annual average increase of approximately 1.2% for the period 1970 through 2010. A linear extrapolation for this time period results in a 20-year population of about 4,250 people, and a 30-year population of 4,560 people.

The second method of population estimation used fixed annual growth rates over the design life of the project. Figure 2-3 shows a graph of future population with growth rates ranging from 0.5% to 2.0%, along with the historic trend in population from 1970 through 2010. This results in a 20-year population for Kotzebue ranging from 3,485 to 4,687 people, and a 30-year population projection ranging from 3,736 to 5,914. The most recent sanitation facilities development plan (2005) estimated a 20-year design population of 4,544 people with a low estimate of 4,092 and a high of 4,995.

Finally, the Alaska Department of Labor and Workforce Development, Research and Analysis Section, Demographics Unit, estimates the future population through 2030 in 5-year increments for the local census unit using a cohort component technique in which population age groups are separated and aged forward in time with projected in and out migrations added and deaths

included. As such, births, deaths, and migration components are considered in the estimate. The model results show a 1.14% annual growth through 2015, a 1.05% rate between 2015 and 2020, a 0.94% rate from 2020 to 2025, and a 1.01% growth rate between 2025 and 2030. This approach indicates that future planning should use an overall 1.0% population growth factor for the 20- to 30-year planning horizon.

Based on the above and relying on information provided by the City, an estimated future 20-year population (2030) of 4,250 people and future 30-year population of 5,200 are proposed. Using the current occupancy rate of 3.4 people per household results in a future number of 1,250 equivalent households for 20 years and 1,529 households for 30 years, compared with the total current available housing inventory of 1,007. The selection of design population is conservative and does not significantly affect decisions concerning water treatment plant improvements for the community in that a greater population growth would reach system capacity earlier than the selected design period or require longer system operating hours. A lower population growth rate would extend the selected timeline or result in fewer operating hours.

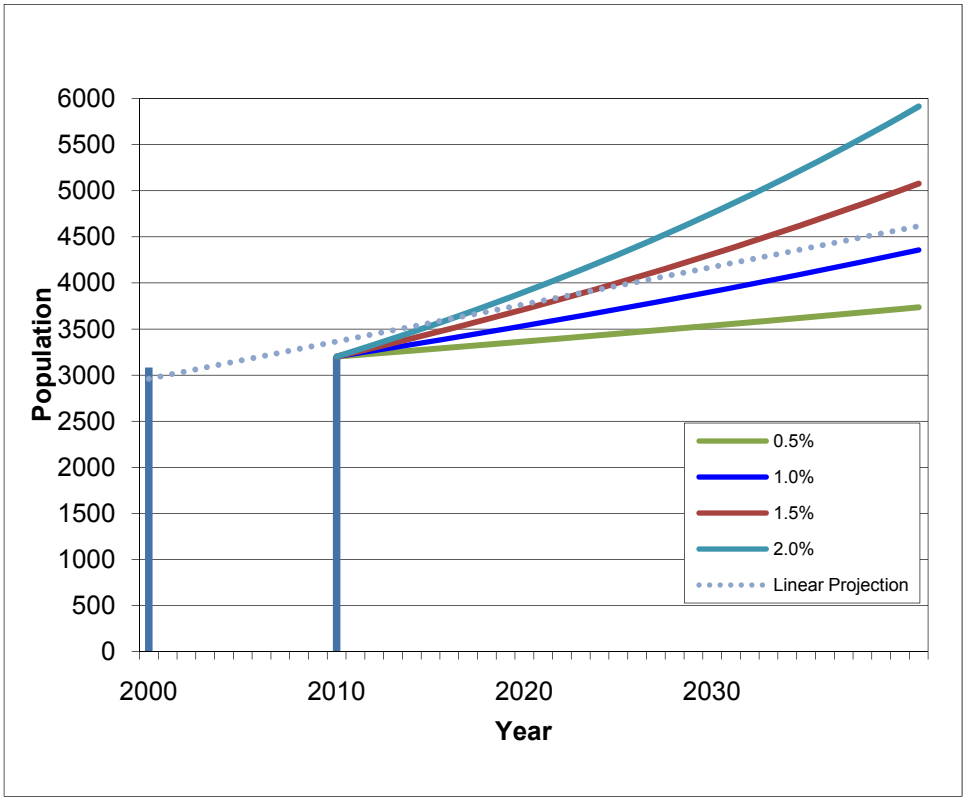

Figure 2-3: Linear Population Projection

2.2 Environmental Conditions and Natural Resources

2.2.1 Climate

Kotzebue is located in the transitional climate zone, which is characterized by long, cold winters and cool summers. The average low temperature during January is -12 °F; the average high during July is 58 °F. Temperature extremes have been measured from -52 to 85 °F. Annual snowfall averages 40 inches with total precipitation of 9 inches per year. Kotzebue Sound is ice-free from early July until early October.

Recent change in climate may be the cause of the later start of winter which has resulted in erosion of the town's shoreline from waves generated by high northwest winds in October and November. The prevailing annual wind direction is from the east in the months September through April and from the west during the summer. Kotzebue Electric Association's wind farm clocks the average wind speed at 14.1 mph with summer storms regularly producing wind speeds of 28 mph. Winter winds can be even stronger; the ten-year high velocity is 64 mph, and winds greater than 55 mph have been recorded from all directions except north and northeast. Table 2-2 summarizes climate data and additional information useful for design.

Table 2-2: Environmental Criteria

Parameter	Value	Notes/comments
Mean Annual Air Temperature, °F	21.9	WRCC[1]
Air Thawing Index, degree-days	2,400	Calculated
Air Freezing Index, degree-days	6,500	Calculated
Air Mean Amplitude, °F	36.6	WRCC[1]
Air Thaw Season, days	146.2	WRCC[1]
Air Freeze Season, days	218.8	WRCC[1]
n-thaw	1.9	Gravel surface
n-freeze	0.9	Gravel surface
Design Surface Thaw Index, degree-days	4,560	Calculated
Design Surface Freeze Index, degree-days	5,850	Calculated
Design Surface Amplitude, °F	44.7	WRCC[1]
Design Surface Thaw Season, days	173.3	WRCC[1]
Design Surface Freeze Season, days	191.7	WRCC[1]
Temperature Range, max/min °F	85/-52	WRCC[1]
Design Heating Degree Days, day- °F	15,708	WRCC[1]
Freeze Day Probability, days (90%)	286	WRCC[1]
Basic Wind Speed, mph	120	IBC 2009[2]
Ground Snow Load, psf	60	IBC 2009[2]
Maximum Credible Earthquake—0.2 sec (Ss)	0.427	IBC 2009[2]
Maximum Credible Earthquake—1 sec (S1)	0.129	IBC 2009[2]

[1] Western Regional Climate Center Database, 2009.
[2] International Building Code, 2009.

2.2.2 Geology and Soil Conditions

Unconsolidated Quaternary sediments deposited by wind, glacier, and marine sources make up most of the Baldwin Peninsula. Surface soils are also sedimentary in origin and consist of clays, silts, and fine sands. Samples from a petroleum exploration well drilled in 1974 in the area revealed bedrock at 900 feet. Kotzebue's topography varies between gently rolling hills and flat areas with the highest elevation at approximately 150 feet. Bluffs of 20 to 100 feet high along the coast are typical.

Four main types of soil can be found in Kotzebue: The majority is very gravely sand found in upper elevations while gravely sand is common in lower elevations. The third type is silt loam characterized as "poorly drained and non-acid with thick mats of organic material over stratified silt and sand alluvium." Last, peat, a poorly drained, neutral soil, is found in areas occasionally flooded by seawater.

2.2.3 Water Resources

Although Kotzebue is in an area of low precipitation, surface water is a major component of the physical environment. Saltwater nearly surrounds Kotzebue, and many small freshwater lakes and streams dot the landscape. Additionally, three major rivers, the Noatak, Kobuk, and Selawik, drain into the sea within 60 miles of Kotzebue (Figure 2-1). Local lakes are used to supply drinking water to residents; streams have been used in the past. Ground water is available above and below the permafrost; however, local aquifers have not been developed for public drinking-water supplies because they are commonly affected by saltwater.

2.2.4 Wildlife and Vegetation

Cotton grass tussocks and dwarf shrubs make up the primary vegetation on the Baldwin Peninsula. Trees in the area are few and small but can be found in the Noatak and Kobuk River drainages. Residents use driftwood--scattered along the coast of the Chukchi Sea, the Baldwin Peninsula and the south side of Kotzebue Sound--for fuel, drying racks, and temporary shelters.

During all seasons of the year, various edible plants are collected: greens, cranberries, salmonberries, blueberries, blackberries, and roots or tubers. In addition, "Eskimo potatoes," "spinach," "sourdock," cotton grass, wild rhubarb, wild onion, wild peas, and willow leaves and sprouts are also harvested.

2.2.5 Flood Hazard

The US Army Corps of Engineers reports that flooding caused by extremely high tides, storm surges, or tsunamis may occur. A copy of the flood hazard report is included in Appendix A.

Flooding of the coastal areas near Kotzebue occurred in 1963, 1965, 1982, 1986, 1990, 2002, and 2004 due to storm-driven waves; however, the flood hazard is considered low. Because of the shallow water and extensive offshore sandbars, damage during past flooding has consisted mainly of local erosion of the beachfront (U.S. Army Corps of Engineers, 1993). Construction of seafront improvements along Front St., which will reduce the flood potential, is underway. The water treatment plant site is not located in an area subject to flooding.

2.2.6 Seismic Hazard

The risk of major seismic activity in Kotzebue is low; however, the 2009 International Building Code places it in Seismic Design Category D, which means that structures must comply with the requirements laid out in the rating.

Table 2-2 summarizes the site-specific seismic design spectra parameters for this location.

2.3 Land Status and Ownership

The building site for the water treatment plant is owned by the City. A current map of the water treatment plant site property boundaries is shown in Figure 2-4 along with the proposed water treatment plant location.

2.4 Electricity and Fuel

Electricity is provided by Kotzebue Electric Association. Current (2010) regulated rates are $10.00 per month per meter for residential users and $50.00 per month for large power users. Residential users are charged $0.3275 per kilowatt hour (kWh), and large power, three-phase users pay $0.290 per kWh. The cooperative participates in the state Power Cost Equalization (PCE) program which reduces the rate from an estimated $0.51 per kWh. Additionally, Kotzebue uses sixteen 50-kilowatt wind turbines to supplement diesel generator electricity. Current (2010) contract fuel rates are approximately $4.82 per gallon for diesel and $4.73 for gasoline, with wide price variations over the course of several months.

2.5 Community Equipment and Resources

The following is a listing of the City's construction and operations equipment:

Table 2-3: City Equipment

CITY ID	DESCRIPTION	MAKE	YEAR	CONDITION	VALUE
PWH-6	Water Truck	Kenworth	1981	Fair	$6,000
PWH-7	Hydrojet	GMC	1980	Poor	$4,000
PWH-8	HydroVac	Ford	1993	Fair	$29,000
PWH-9	Hydrojet	Sterling	2002	Nearly New	$89,000
PWH-14	Steam Truck	Ford	1982	Fair	$4,000
PWH-15	Water Wagon	Ford	1984	Fair	$4,000
PWE-5	772C Grader	John Deere	1982	Fair	$23,000
PWE-6	163H Grader	Caterpillar	2001	Nearly New	$149,900
PWE-8	644C Loader	John Deere	1985	Fair	$35,000
PWE-9	644C Loader	John Deere	1985	Fair	$35,000
PWE-11	EX150 Backhoe	Hitachi	1989	Fair	$43,600
PWE-12	710 Loader/Backhoe	John Deere	1984	Poor	$27,400
PWE-13	Genset 185	Ingersol-Rand	1993	Good	-
PWE-14	Compressor	Ingersol-Rand	1993	Good	-
PWE-20	Bearcat 340	Arctic Cat	1995	Good	$1,500
PWE-21	Big Bear 350 4-wheeler	Yamaha	1995	Fair	$500
PWE-23	Snow Blower	Fair	1993	Fair	$2,000
PWE-25	Articulated Snowblower	Trackless MT	2005	New	$80,000
PWL-3	F250 4x4 Pickup	Ford	1995	-	-
PWL-7	1500 4x4 Pickup	Chevrolet	1999	-	-
PWL-13	F350 4x4 Flatbed	Ford	1995	-	-
PWE-28	Lowboy	Towmaster	2008	New	$49,412
PWE-29	D65EXEO Dozer	Komatsu	2008	New	$300,000
BA7000F	Asphalt Recycler	Bagela	2007	New	$139,225
PWL-18	F350 4x4 Flatbed	Ford	2010	New	$32,955
PWE-19	F350 4x4 Crewcab	Ford	2010	New	$32,762
PWE-20	F150 4x4 Pickup	Ford	2010	New	$20,554
PWE-21	F150 4x4 Pickup	Ford	2010	New	$20,554

Table 2-4 lists the city's short-lived assets and replacement costs.

Table 2-4 Short-lived Assets and Replacement Costs

FIVE YEAR REPLACEMENT ASSETS				
WATER	**Size**	**Number**	**Cost**	**Total**
Raw Water Pumps (Submersible)	7.5 HP	4	$4,500	$18,000
Raw Water Pumphouse Compressor	5 HP	1	$1,500	$1,500
Water Loops Pumps	7.5 HP	8	$2,000	$16,000
Water Loops Pumps	10 HP	2	$2,500	$5,000
Water Loops Pumps	15 HP	2	$3,000	$6,000
Booster Pumps	7.5 HP	4	$3,000	$12,000
WTP Backwash & Treated Water Pumps	20 HP	4	$6,000	$24,000
WTP Filters Multi-Media	units	2	$20,000	$40,000
WTP Chemical Feed Pumps	0.75 HP	6	$2,500	$15,000
WTP Chemical Feed Mixers	0.5 HP	6	$1,350	$8,100
WTP Lift Station Pumps	10 HP	2	$3,500	$7,000
SEWAGE				
Lift Station Submersible Pumps (#2,#9,#11)	3 HP	4	$4,000	$16,000
Lift Station Submersible Pumps (#5,#6,#8,#12,#13)	5 HP	14	$3,225	$45,150
Lift Station Submersible Pumps (#1,#4,#7,#10)	20 HP	6	$7,400	$44,400
WATER & SEWER MANAGEMENT				
Computers & Software	sum	2	$4,000	$8,000
Copier/printers, large copier, large printer (partial on all)	sum	1	$25,000	$25,000
Total five year replacement budget				**$291,150**
Annual contribution	(Total/5)			$58,230
TEN YEAR REPLACEMENT ASSETS				
WATER	**Size**	**Number**	**Cost**	**Total**
Flooring/ Carpeting	ft2	2000	$6	$12,000
Building Painting	ft2	7500	$3	$22,500
Water Dept. Service Utility Truck	units	1	$35,000	$35,000
SEWAGE				
Lift Station Submersible Pump & Level Controls	units	12	$6,000	$72,000
WTP Lift Station Pump & Level Controls	sum	1	$6,000	$6,000
Sewer Dept. Service Utility Truck	units	1	$35,000	$35,000
Combination Sewer Cleaner Truck	units	1	$280,000	$280,000
Lift Stations Building Painting	ft2	4500	$3	$13,500
Total ten year replacement budget				**$476,000**
Annual contribution	(Total/10)			$47,600
FIFTEEN YEAR REPLACEMENT ASSETS				
WATER	**Size**	**Number**	**Cost**	**Total**
Excavator/Backhoe	units	1	$220,000	$220,000
Loader / Dozer / Grader (Partial on each)	units	1	$180,000	$180,000
Water Tanker	units	1	$120,000	$120,000
Valves in WTP (4", 6", 8", 10")	units	50	$650	$32,500
SEWAGE				
Sewer Rodder Machine	units	1	$160,000	$160,000
Valves in Lift Stations (4", 6")	units	54	$600	$32,400
Total fifteen year replacement budget				**$744,900**
Annual contribution	(Total/15)			$49,660
TOTAL ANNUAL CONTRIBUTION, 5, 10& 15 Yr Needs				**$155,490**

2.6 Community Economy and Financial Profile

The City, School District and Kotzebue Tribal Corp. are the largest employers. At the time of the 2000 US Census, the per-capita income in Kotzebue was $18,289, and 13.1% of residents were living below the poverty level. The median family income was $58,068.

2.7 Public Administration

Kotzebue was incorporated in 1958, has a mayoral form of government, and holds its municipal elections on the first Tuesday in October. The City Council meets on the first and third Thursdays of each month. The City has a 6% local sales tax. Elected/Appointed officials include the following:

Mayor (term ends)	Eugene Smith (2012)
City Council (term ends)	Ernest Norton, Vice Mayor (2011)
	Jason Avery (2011)
	Clement Richards Sr. (2011)
	Matthew Tekker (2012)
	Pete Shaeffer (2013)
	Nathan Kotch, Jr. (2013)

Table 2-5 is a list of community contacts for several organizations represented in the Kotzebue region.

Table 2-5: Community Contacts

Organization **Primary Contact/Title:**		**Address** **Phone/Fax:**	
Native Village of Kotzebue, Kotzebue IRA		P.O. Box 296 Kotzebue, AK 99752-0296	
Cole Shaeffer President	Village Council	Phone: 907-442-3467	Email: info@kotzebueira.org
Kikiktagruk Inupiat Corporation		P.O. Box 1050, 373A Second Avenue Kotzebue, AK 99752	
Kris Lethin President	Village Corporation	Phone: 907-442-3165	Fax: 907-442-2165
City of Kotzebue		P.O. Box 46 Kotzebue, AK 99752	
Eugene Smith Mayor	City Government	Phone: 907-442-3401	Fax: 907- 442-3742 Email: lgreene@kotzebue.org
NANA Regional Corporation		P.O. Box 49 Kotzebue, AK 99752	
Marie Greene President	Regional Native Corporation	Phone: 907-442-3301	Fax: 907- 442-2866 Email: info@nana.com

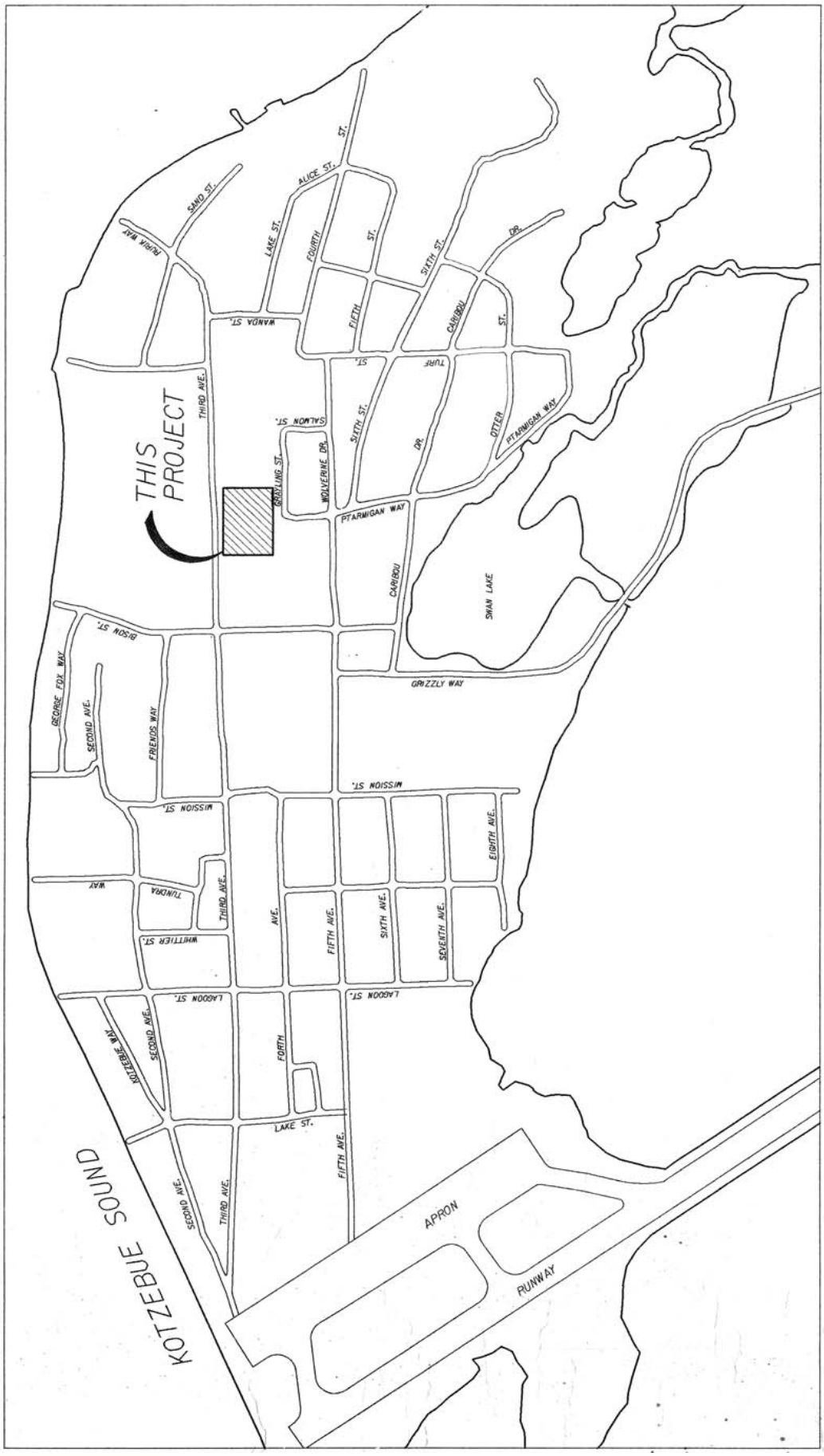

Figure 2-1 Location and Vicinity Map

GV Jones & Associates, Inc.
WATER AND WASTEWATER PROCESS ENGINEERS

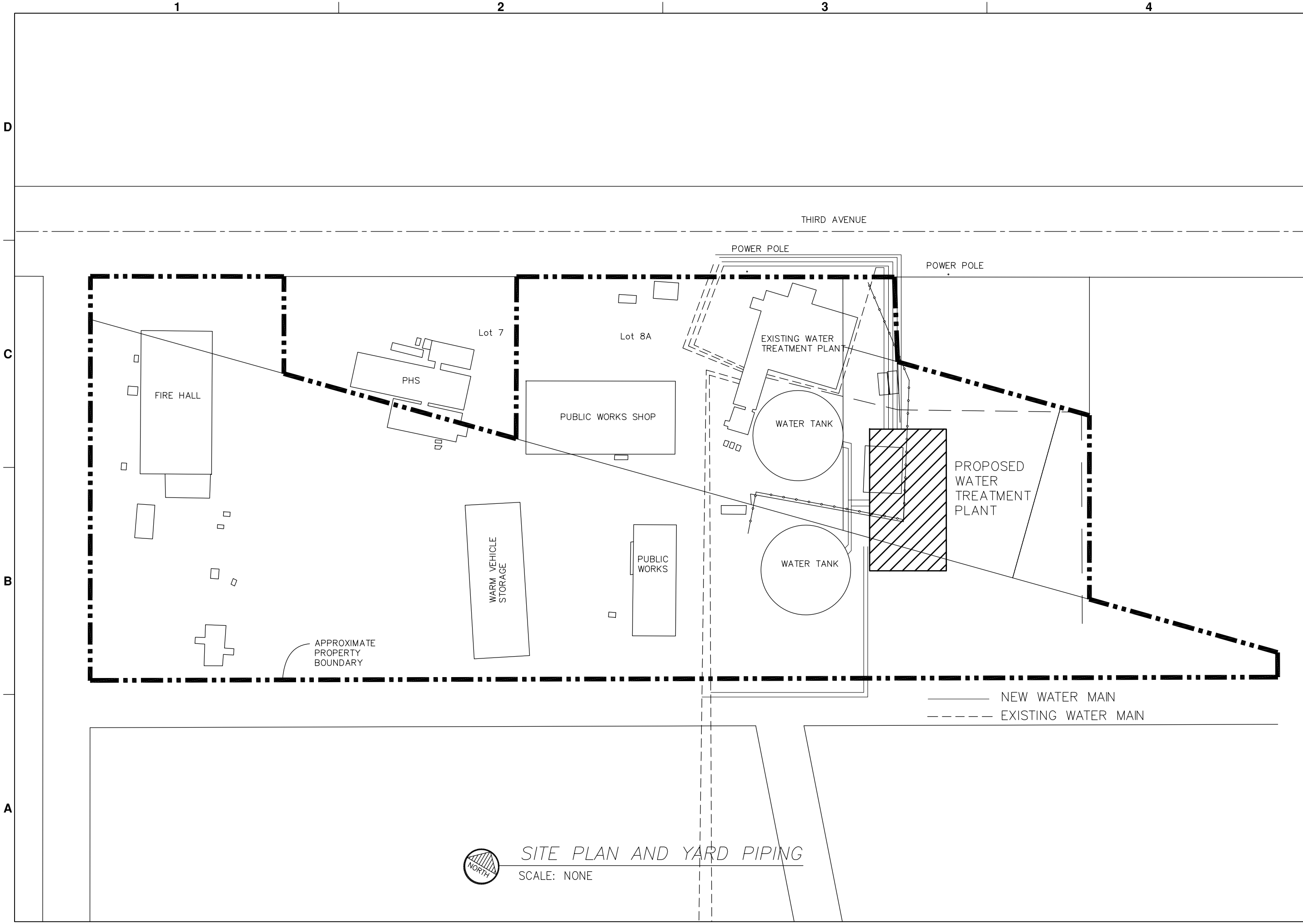

GV Jones & Associates, Inc.
WATER AND WASTEWATER PROCESS ENGINEERS
1200 E 76th AVE.
ANCHORAGE, ALASKA 99518

CITY OF KOTZEBUE
WATER TREATMENT PLANT
REPLACEMENT STUDY

FIGURE 2-4
NEW WATER TREATMENT PLANT
LAND OWNERSHIP

FIG
2-4

Section 3

Existing Water Treatment Facilities

3.0 Existing Water Treatment System

This section describes the City's existing water system.

3.1 Background Kotzebue Water Source and Treatment History

The physical location of Kotzebue has made it a difficult community to serve with water. The setting on a 3-mile-long, glacial-gravel and marine-sediment spit adjoining the Baldwin Peninsula has challenged the City to match the water supply with continued growth. In the early years and into the 1950s, the Native residents used water from June Creek (located 3 miles south) and local lakes during the summer, along with water from sporadic, individual, shallow wells within the community. Winter supplies came from ice harvested from local lakes across the lagoon east of the community. Wells withdrew shallow fresh water overlying the brackish ground water and were subject to contamination.

The PHS Kotzebue hospital, built in 1961, developed a water source from an ocean intake on Kotzebue Sound; this water was treated by a vapor-flash-distillation process and served the hospital complex and BIA school during the 1960s. Assistance for a community-wide water supply began in the early 1960s from the Public Health Service working through the Alaska Native Health Service with authority of PL 86-121. These initial PHS project efforts to build a piped utility system took over 18 years.

3.1.1 Initial Improvement Efforts

The initial water supply effort was to fund an engineering study of possible domestic water sources. This 1963 study recommended several alternatives including damming June Creek south of the community, damming the lagoon adjacent to the community, and using either the lakes on Baldwin Peninsula east of the community or a form of seawater distillation. With the study as a guide, soil exploration was conducted on June Creek to evaluate the feasibility of a water storage dam. This idea was abandoned due to poor foundation conditions in the permafrost soils and anticipated high costs. The lakes east of the community were evaluated and decisions made to utilize the closest small lake near the Very High Frequency Omni-Directional Radio Range Tactical Air Navigation Aid (VORTAC) beacon (hence the name Vortac Lake) as a site for a surface water impoundment. The watershed was limited but it appeared that a dam could be built to create an adequate water reservoir that could be filled in summer months from adjoining lakes. A plan was developed in 1963 to build what became one of the first permafrost dams in the arctic on Vortac Lake, followed by an adjacent raw water heating

plant, above-ground water transmission line, water treatment plant, and large, insulated, steel water reservoir near the hospital. From this beginning infrastructure, water could be supplied to the community. As additional limited funding was identified, planning continued on a multi-phased, piped-water distribution system for the community.

The use of the arctic surface water for a water source proved to be a challenge. The building of the dam required several years of construction to use the local permafrost soils to build a structure that had to be refrozen to serve as a dam. Adjacent soils became unstable as the water rose in the reservoir and the flooded organic tundra soils provided ever-changing water-treatment issues. As the dam was incrementally completed (1967–1971), additional water was pumped to Vortac Lake through a summer transmission line laid east to Devil's Lake. The treatment processes evolved as initial attempts to treat the changing water quality provided marginal results. Additional water quality regulations and growing public use demanded better quality. The supply from Vortac Lake was initially screened and chlorinated followed by storage in the new 1.5-MG storage tank (1968). Water was available at a boiler plant/watering point at the tank with a limited, hauled delivery service. Construction of a circulating piped system was started on the first of 4 distribution loops (1968). Water quality was soon improved (1972) by installation of a treatment process with direct polyelectrolyte injection followed by a 75-gpm upflow industrial filtration process and post-chlorination.

The treatment process was marginally successful at higher flow rates due to particulate breakthrough (the water being highly colored but with relatively low turbidity). Additional treatment testing was done and a heavy dose of alum was added to the treatment process to aid in color removal (1973). This resulted in improved water quality but also resulted in a process that passed much of the solids to the granular media filters, requiring frequent backwash and reduced plant efficiency. The expanding water distribution system along with added municipal service to the hospital and school increased water demands (1975).

The Water treatment plant was replaced in 1976 with a Neptune Microfloc-Aquarius 150 unit (300 gpm nominal capacity) with a gravity filter that was downsized for this water source to treat 240 gpm. This process improved the treatment capability, but the complex and variable water quality still provided many challenges. The dissolved gasses in the cold raw water drawn from under ice were released when heated at Vortac Lake, which later resulted in floating floc in the

mixing and settling tanks. This required installation of an aeration tower as the water entered the plant surge tank. Further testing and improved operation along with modification of the settling tanks (1979) helped to stabilize the treatment process.

The increasing demands on the water source required additional upgrades. During the 1970s the intake on Vortac Lake was rebuilt, heating plant was upgraded, and transmission line replaced to add protection from ocean storm-driven floods and to increase capacity. The water and sewer improvements constructed by PHS/Kotzebue between 1963 and 1981 included a dozen projects with one being the largest single project ever funded by the PHS to that date ($8.1 million). These projects were transferred from the PHS to the City in 1981.

3.1.*2* City Improvements to Water Treatment

In the 1980s, city growth continued, adding additional water demands. The water treatment process was subject to upsets and required close monitoring to control. Engineering studies completed for the City in the early 1980s recommended additional treatment capacity. A second Neptune Microfloc-Aqariius 150 unit was added to the treatment plant in 1984 along with modifications to the piping to serve both units and improve ancillary equipment. The new unit was down-rated for this water source, and both plants together were operated between 200 and 300 gpm.

The water treatment plant has undergone several modifications to meet changing water quality standards. Additional chemical additives were adopted to remove color and turbidity, reduce lead and copper corrosion, and attempt to reduce disinfection byproduct formation (TTHMs and HAA5s).

The plant was studied in the mid-1990s to improve efficiency, and several minor upgrades were made between 1997 and 1999. These included addition of filter to waste piping, installation of additional instrumentation, replacement of settling tubes and granular filter media, addition of skimmers in the flocculation chambers to remove floating material, addition of cationic polymer to reduce alum requirements, addition of a programmable logic controller (PLC) for operational control of the package plant, and installation of an on-site sodium hypochlorite generator to replace the original calcium hypochlorite feed system. An additional evaluation of the treatment system was conducted around 2004 which documented many of the changes made to the water

treatment process. At the present time, the water treatment plant is at capacity and is nearing the end of its functional operating life.

3.1.3 City Improvements to Water Source

The continued population growth of the city during the 1980s dictated that an additional water supply was needed. Prior studies were reviewed and alternatives evaluated including desalination using reverse osmosis or distillation, and construction of a new water storage dam south of the city. The City chose to utilize the much larger Devil's Lake east of Vortac Lake as the primary water source and use the Vortac Lake supply as a backup. A new road, power supply, and pipeline were extended to Devil's Lake; and a pile support intake and boiler plant built on the shoreline was constructed in 1986. This was followed by a dredging project to deepen the lake for additional capacity. Minor modifications to the water supply system have been made since the 1980s to improve the raw water quality or increase capacity. These have included modifying the water intakes to raise intake ports for better water quality, analysis of the lakes to determine water quality upsets with the changing seasons, and evaluation of methods to increase supply capacity. To date, the Devil's Lake source has been adequate, but it may not have sufficient watershed to sustain the long-term supply to the City.

3.2 Description and Condition of Existing Water System

3.2.1 Water Source

Raw water is supplied to the water treatment plant from two sources--Devil's Lake which is the primary source and Vortac Lake which serves as a backup supply. Vortac Lake is located approximately 18,500 feet from the water plant, and Devil's Lake is approximately 8,000 feet farther away. Water is pumped from Devil's Lake with a 7-1/2-hp submersible pump, with another 7-1/2-hp submersible stored on site for use as a backup. Pump operation is manually controlled from the water plant to vary flow to match the demand and tank levels. Water is transported to the plant through an above-ground, 8-inch HDPE arctic pipe with electric heat trace used for thawing. The City has periodically pumped water from Vortac Lake back to Devil's Lake to supplement this source. Very low water conditions have occurred over the past several summers in both of the reservoirs.

Water rights for the water source were issued by DNR in 1982 for 325,000 gallons per day. A copy of the water-rights document is contained in Appendix A.

3.2.2 Water Treatment and Storage

The water treatment process consists of two Micro-Floc Aquarius 150 package water treatment package units operated in parallel. Upon the flow stream's entering the water plant, potassium permanganate and alum are injected before it enters a 25,000-gallon contact tank which originally was a surge tank. Soda ash is added during the spring. After the flow stream leaves the tank, two polymers are added to it--primary cationic coagulant followed by a flocculent aid. In addition, powdered, activated carbon slurry is added as needed to adsorb dissolved organics and eliminate odor in the finished water. The flow then splits and enters the package treatment units. Each of the conventional filtration package units consists of a flocculation basin with a fixed-speed horizontal paddlewheel mechanical mixer, a clarifier with tube settlers, and a single multi-media granular filter. The original design for the filters indicated 18 inches of anthracite over 9 inches of sand, but field inspections in 2005 indicated 24 inches of anthracite over support gravel. Since then, both filters have been rebuilt with new multi-media (sand and garnet), and new under-drains installed. The plant operates at a maximum rated capacity of 300 gpm, and the filters include a hydraulic surface wash. Backwashing of the filters is initiated by the operators once every 24 hours. Backwash water flows through the filter media, through the tube-settlers, and into a 50,000-gallon, above-ground tank located behind the water plant. Waste backwash water flows from the tank to the community sanitary sewer system and out to the City wastewater treatment lagoon.

Post-treatment includes the addition of soda ash for pH control, fluoride, and hypochlorite, which is generated on site. Table 3-1 is a listing of chemicals and quantities used in 2009.

Table 3-1: Water Treatment Chemicals and Quantities - 2009

Chemical	Quantity Used	Notes
Potassium Permanganate	7,000 lbs	
Aluminum Sulfate	50,000 lbs	
Powder Activated Carbon	12,600 lbs	Taste and odor control
CMI EC-473	15 drums	
CMI 633	5 drums	
Soda Ash	36,000 lbs	pH control – corrosion control
Sodium Fluoride	1,700 lbs	

Finished water storage is directed to one of two 1.5-million-gallon, above–ground, steel water storage tanks which provide chlorine contact time as well as operational storage. Figure 3-1 is

a schematic of the water treatment process. Table 3-2 summarizes design parameters for the individual unit processes.

Table 3-2: Existing Water Treatment Unit Processes

Unit Process	Size	Parameter	Notes
Flocculation	Fixed velocity, rectangular	43 minutes	Hydraulic retention time
Sedimentation	175 ft^2 rectangular basin with 7.5^o tube settlers	1.7 gpm/ft^2	Surface loading rate
Filtration	150 ft^2	4.0 gpm/ft^2	
Disinfection	Hypochlorite	1,200 gpm	0.5 log inactivation, pH=7.5, T=0.5^oC, C=0.4 mg/L free chlorine residual, baffle factor 0.1, full tank condition

3.2.3 Water Distribution

The water distribution system for Kotzebue consists of buried HDPE arctic pipe and is a single main, recirculating (pitorifice) system, which replaced major portions of the original PVC water mains and increased their size as the community has grown. Water is circulated through six (6) separate loops with two end-suction centrifugal pumps on each loop. Makeup water is provided from the water storage reservoirs with pressure pumps and a hydropneumatic system. One of the circulation loops passes near the power plant, which can feed waste heat to the distribution system. Waste heat is not used in the current treatment process nor anticipated to be available for the future water plant (nor required).

3.3 Previous Pilot Study Reports

The City has commissioned a number of evaluations of the water treatment plant beginning in 1996 through 2006. The most recent pilot evaluation was conducted in November/December 2005 (winter study) and July 2006 (summer study). The tests were designed to represent winter and summer conditions and evaluated two portable pilot units. The first was a conventional treatment pilot plant consisting of chemical feed, flocculation tank, plate settler, and mixed-media filter consisting of 18 inches of 1.0-mm anthracite over 9 inches of 0.45- to 0.55-mm silica sand. The second was a contact adsorption clarification pilot unit which consisted of chemical feed, upflow adsorption clarifier (with plastic beads), and a mixed-media filter of the same configuration as the conventional pilot unit. Both pilots were run at a constant flow rate of 2.5 gallons per minute per square foot of filter media. Water and air backwash was included in the pilot units, with water quality measurements taken manually and filter head loss data collected electronically. The objectives of the study were to determine optimum chemical doses, establish plant design information, and meet or exceed the drinking water requirements. Details of the pilot study are contained in a report entitled *"Purification Technology, Inc. Light Media*

Adsorption Clarification and Mixed Media Filtration Conventional Clarification and Mixed Media Filtration Pilot Studies Report November 1 to December 16, 2005; and July 10 to July 31, 2006."

The conclusions of the winter study were that the conventional filtration pilot test system did not provide adequate performance due to floc passage through the clarifier resulting in high solids loading to the filter and short filter run times. The contact clarifier pilot performed well with a 47-hour filter run time with 3.56 feet of head loss (extrapolated in the report to 58 hours calculated for 8 feet of head loss) with finished water quality turbidity, iron, and manganese levels below the MCLs. The evaluation did not include disinfection by-products sampling so it was not possible to determine DBP regulatory compliance. The winter raw water turbidity averaged 1.26 NTU, true color 43 pcu, soluble iron 0.41 mg/L and soluble manganese 0.010 mg/L. Finished water turbidity was 0.010 NTU, true color less than 5 PCU, iron less than 0.030 mg/L and manganese less than 0.010 mg/L. Potassium permanganate feed rate was 2.2 mg/L, alum was 43 mg/L, EC 473 was 6.8 mg/L, CMI-633 was 0.19 mg/L.

Due to poor performance of the conventional pilot, it was not used for the summer study. The contact adsorption clarifier performed well for turbidity, iron, and manganese removal. The pilot filter was run 17 hours with 0.83 feet of head loss and extrapolated in the report to 318 hours. The raw water turbidity was 3.6 NTU, true color was 33 PCU, iron was 1.70 mg/L and manganese was 0.13 mg/L. The treated water turbidity at the end of the filter run was 0.051 NTU, color was less than 5 PCU, iron was 0.030 mg/L and manganese was 0.13 mg/L. A sample for TTHM and HAA formation potential at the end of the filter run had values of 177 µg/L and 137 µg/L, respectively. The chemical feed rates were 3.3 mg/L of potassium permanganate, 33 mg/L of alum, 5.5 mg/L of EC-473, 0.12 mg/L of CMI-633, 5.25 mg/L of soda ash, and 5.4 mg/L of powder-activated carbon.

The winter report concluded that alum and potassium permanganate should continue to be used based on historic precedent, with a 1-2 hour contact time. Two polymers (EC-473 and CMI-633) were recommended prior to the clarifiers; contact clarifier design rates should be 5 gpm per square foot with 10 gpm/square foot "flushing." No evaluation of alternate media or gradation was performed, but presumably the loading rate of 2.0 to 2.5 gpm/sq.ft. was used.

Although the contact clarifier has not been installed, the additional polymers, PAC, and soda ash have been utilized and adjustments to the chemical feed rates made to conform to the pilot plant optimized feed rates. As with the results of the pilot plant, the water quality and performance of the existing water treatment plant have been good, with the exception of disinfection by-products concentration in the distribution system, as discussed in subsequent sections of this report. The report results would indicate that contact adsorption clarification followed by granular media filters can be effective in the removal of oxidized iron and manganese by using potassium permanganate. Color and turbidity can be removed by alum and polymer, but PAC was not effective in reducing disinfection by-product formation of HAA5 to below the maximum contaminant level. Soda ash and greater amounts of alum have been used as enhanced coagulation methods to reduce total organic carbon as a treatment technique.

3.4 Existing Water Quality and Water Treatment Performance

Water quality data and operator plant performance data were analyzed for the last 3-1/2 years of operation. Figure 3-2 summarizes daily raw water turbidity data. Raw water turbidity has ranged from a minimum of 0.4 NTU to a maximum of 28.4 NTU, and a 95-percentile value range was 12.45 in 2009.

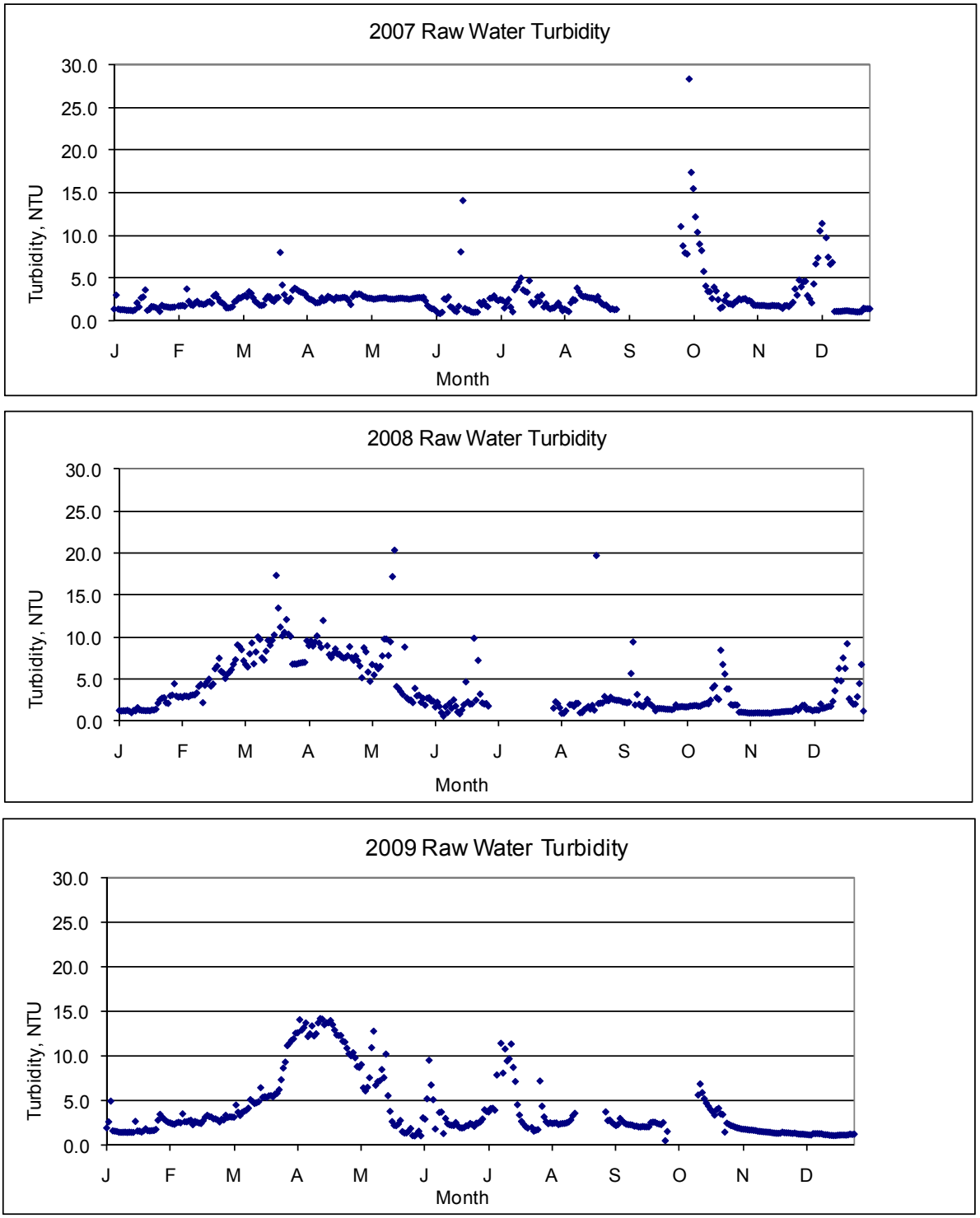

Figure 3-2: Daily Raw Water Turbidity 2007-2009

Figure 3-3 summarizes frequency distributions for the raw water turbidity for 2007 through 2009. Figures 3-4, 3-5, and 3-6 summarize daily values for raw water temperature and pH, and iron, and manganese concentrations.

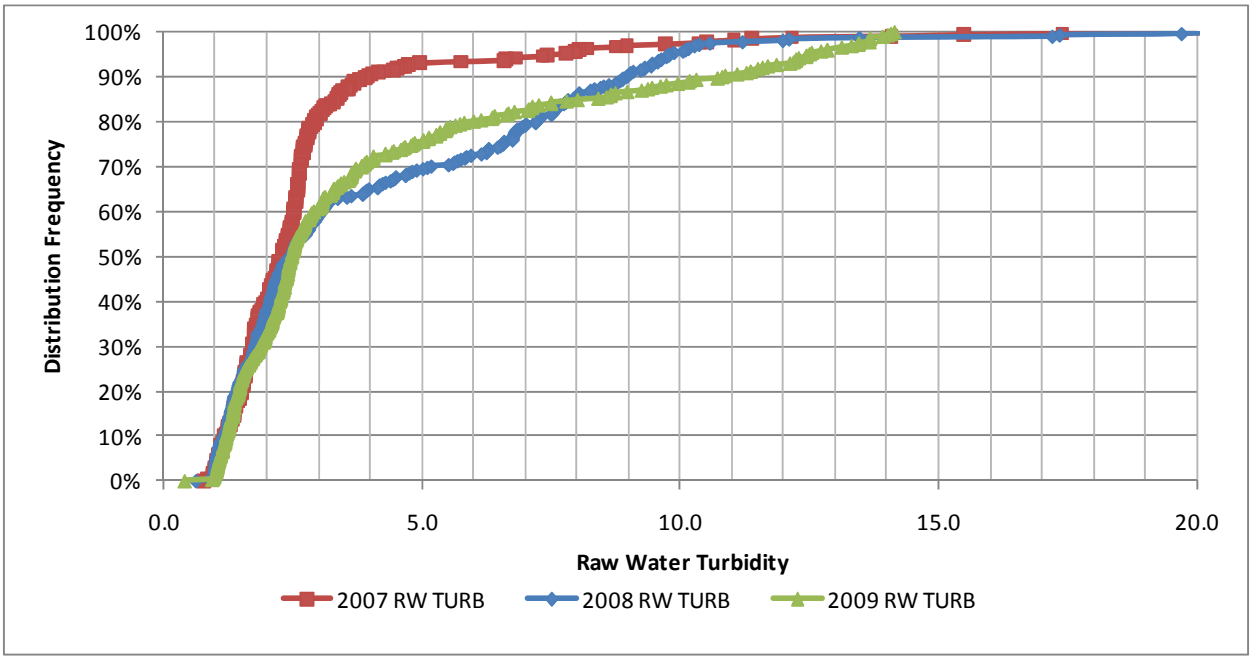

Figure 3-3: Raw Water Turbidity Frequency Distribution

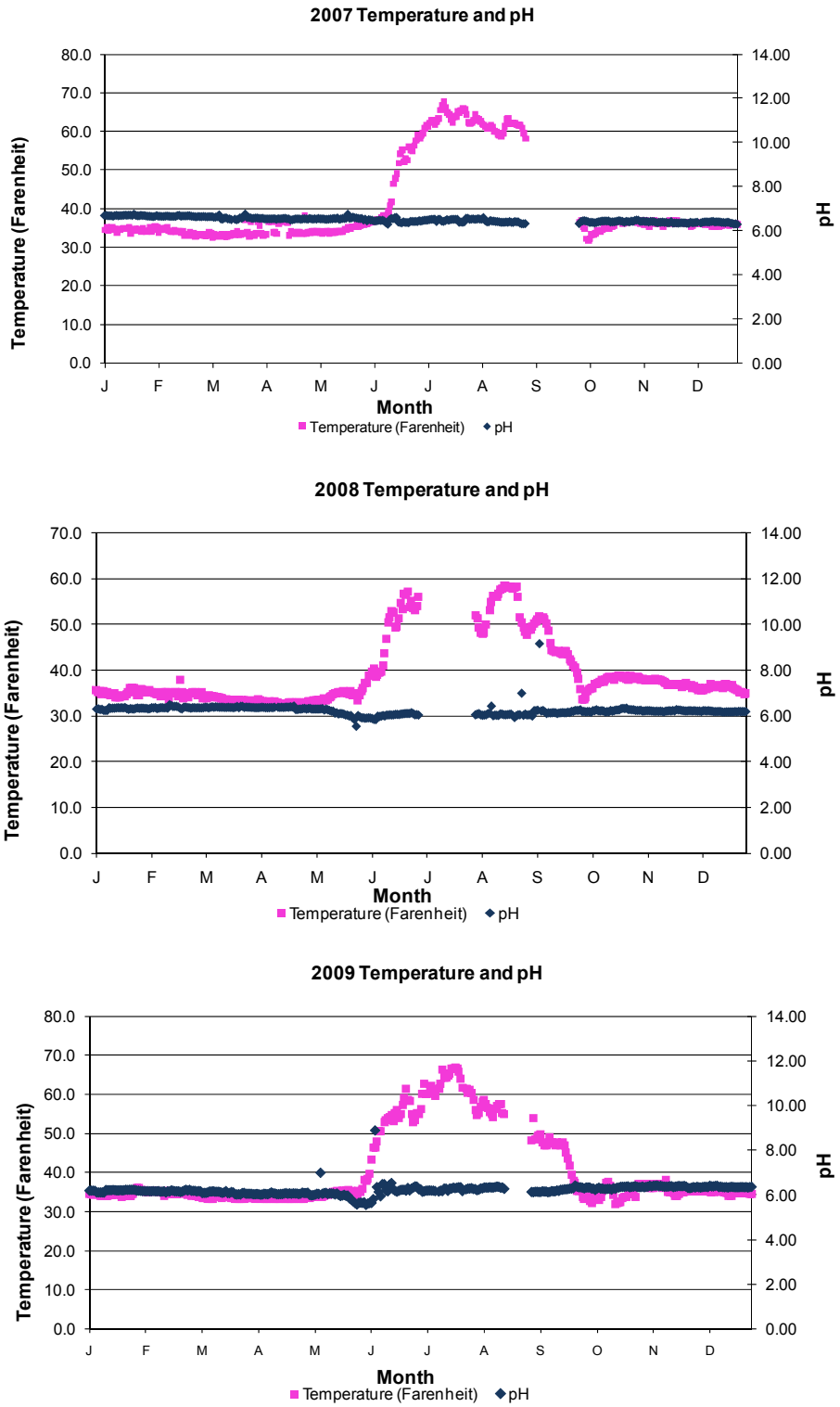

Figure 3-4: Daily Raw Water Temperature and pH

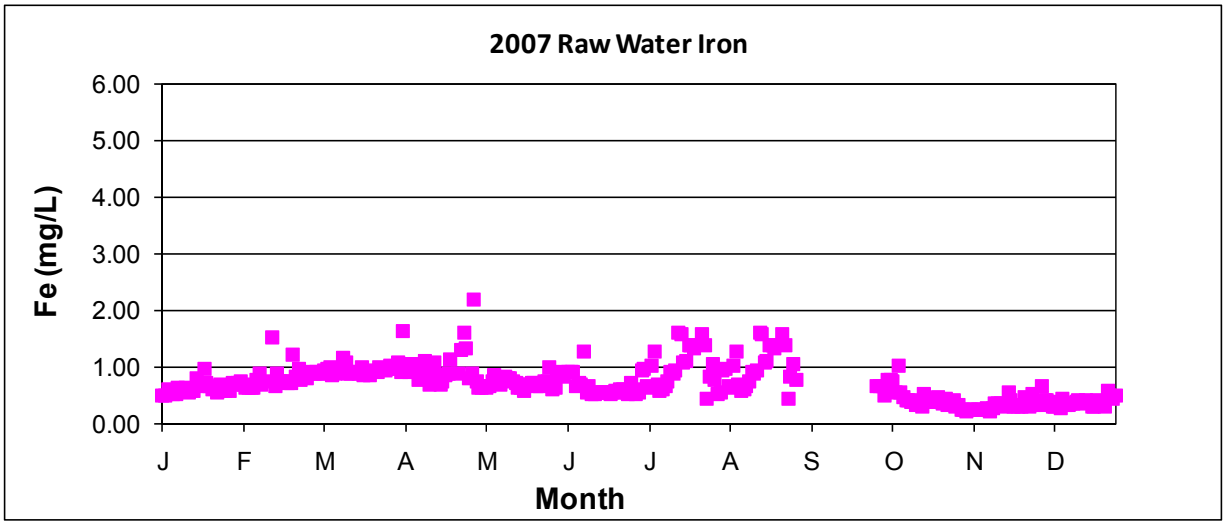

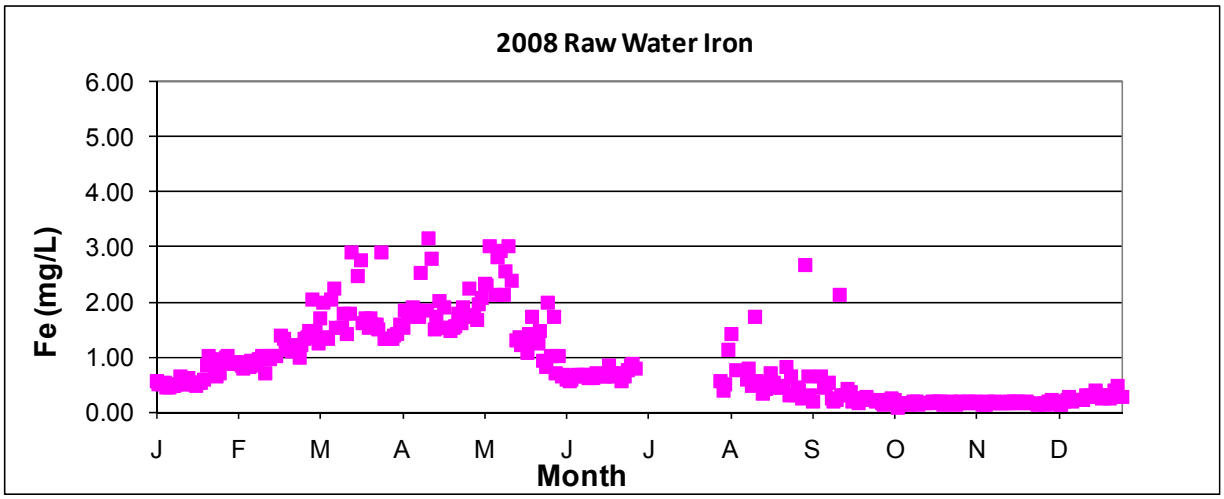

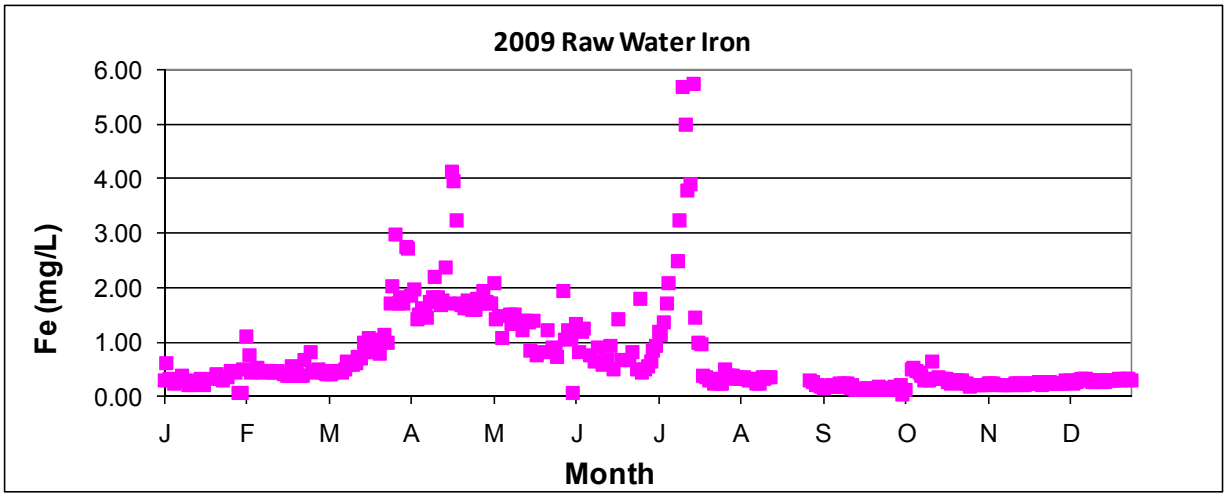

Figure 3-5: Daily Raw Water Iron

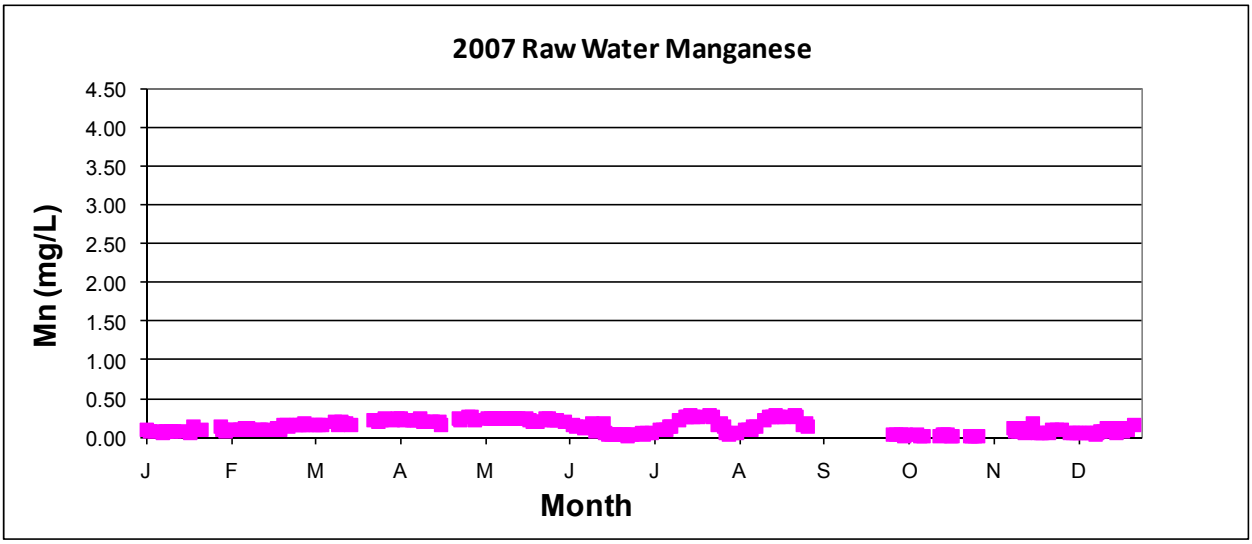

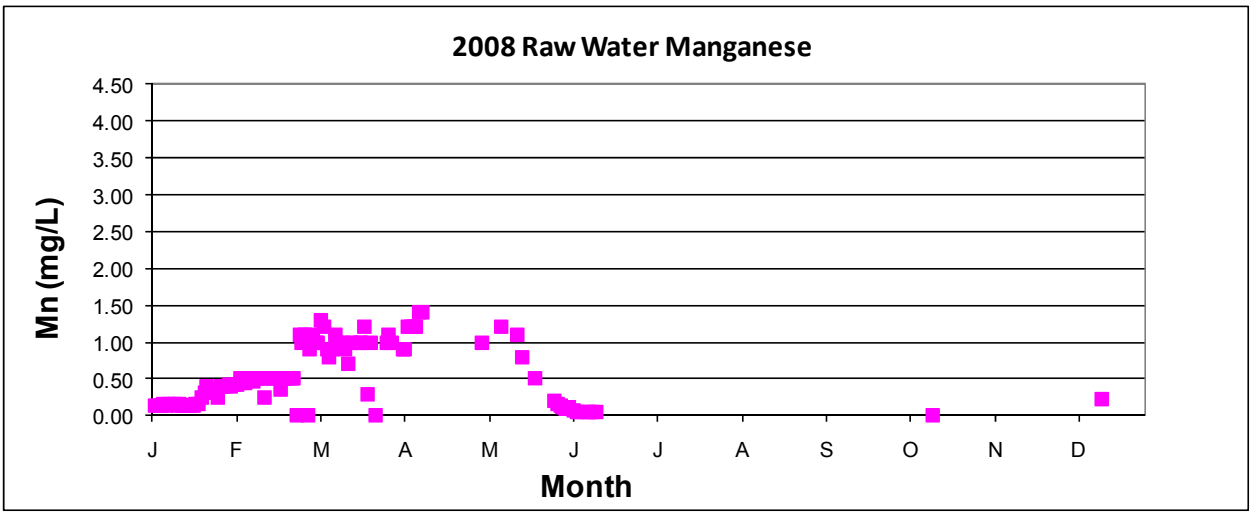

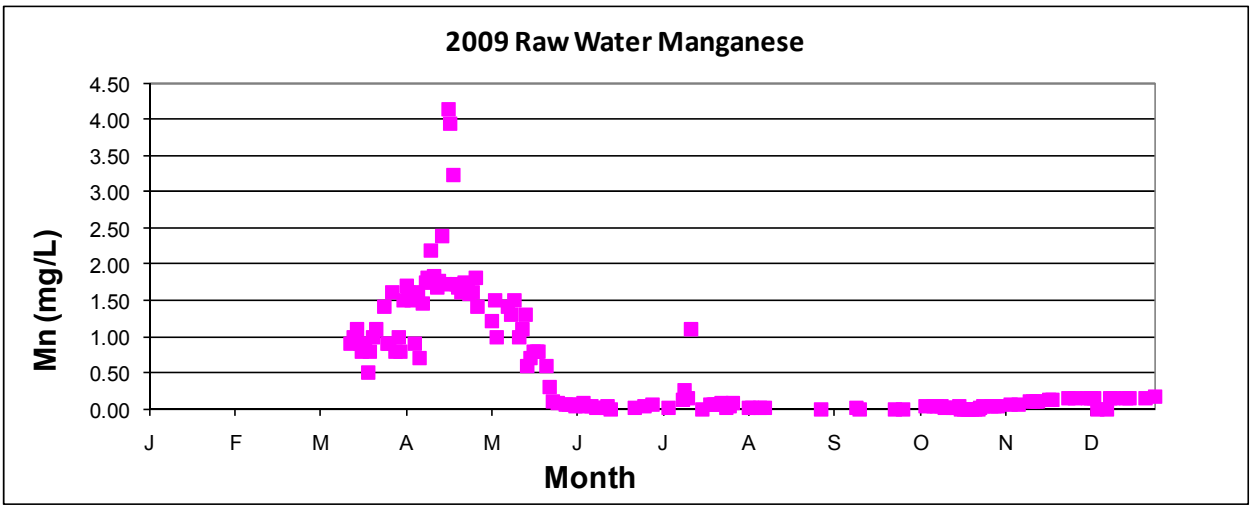

Figure 3-6: Daily Raw Water Manganese

Table 3-3 summarizes statistical information on source water quality based on operator data for the years 2007 through 2009.

Table 3-3: Source Water Quality Statistics

Statistic	Turbidity, NTU	True Color, PCU	Apparent Color, PCU	Total Alkalinity, as $CaCO_3$
Range	0.80 - 28.4	0 - 14	16 - 286	9 - 76
Median	2.49	2.0	52	39
95th Percentile	12.5	7.8	115	75.8

Statistic	Total Iron, mg/L	Total Manganese, mg/L	Total Hardness, mg/L as $CaCO_3$	pH	Temperature, º F
Range	0.04 - 5.74	0 - 4.14	33 - 111	5.54-9.14	32.4 - 67.8
Median	0.65	0.50	68	6.22	
95th Percentile	2.33	1.82	109		

Photographs of the water treatment plant are shown below.

Photograph – Water Treatment Plant with Backwash Tank

Photograph – Water Treatment Plant

Photograph – Water Treatment Interior

3.5 Financial Status of Existing Facilities

The City of Kotzebue is a well-managed community. All utilities are in working order and the City has made a concerted effort to obtain grants funds over the years to not only expand the system but to replace and upgrade aging infrastructure. The City's most recent financial data are available from the City office as a separate supplement to this PER and include audited financial statements including actual revenues, expenditures, and current budget. In addition, copies of the last three years of statements for the water and sewer utility enterprise fund are contained in Appendix H. The water and sewer system is operated as a separate enterprise administered by the City's Department of Public Works. Table 3-4 summarizes current financial information for the water and sewer system. As noted, the water and sewer revenues for 2010 exceed the operating expenses.

Table 3-4: Current Financial Status – Kotzebue Water and Sewer System

Item	2010	2009
Revenue		
Water use charges	$ 1,239,480	$ 1,211,749
Sewer use charges	$ 573,837	$ 523,900
Penalties/interest	$ 19,112	$ 20,344
Total Revenue	**$ 1,832,429**	**$ 1,755,993**
Expenses		
Administration	$ 346,974	$ 358,667
Water		
Personnel	$ 324,853	$ 387,416
Electricity	$ 129,195	$ 121,810
Heating Fuel	$ 221,142	$ 384,109
Building Maintenance	$ 1,773	$ 9,332
Supplies	$ 215,828	$ 205,832
Telephone	$ 6,361	$ 5,828
Travel	$ 4,522	$ 1,587
Training	$ 1,709	$ 430
Professional Services	$ 52,082	$ 49,559
Insurance	$ 37,562	$ 39,576
Repairs/Maintenance	$ 8,154	$ 6,363
Other	$ 1,454	$ 1,763
Total Water	$ 1,004,635	$ 1,213,605

Sewer		
Personnel	$ 295,683	$ 324,164
Electricity	$ 47,000	$ 47,252
Supplies	$ 27,422	$ 43,474
Travel	$ 1,431	$ 1,303
Training	$ 170	$ 370
Professional Services	$ 533	$ 1,300
Insurance	$ 27,541	$ 25,648
Repairs and Maintenance	$ 36,167	$ 64,505
Capital outlay		$ 6,384
Other	$ 509	$ 1,779
Total Sewer	$ 436,456	$ 516,179
Total Operating Expense	**$ 1,788,065**	**$ 2,088,451**

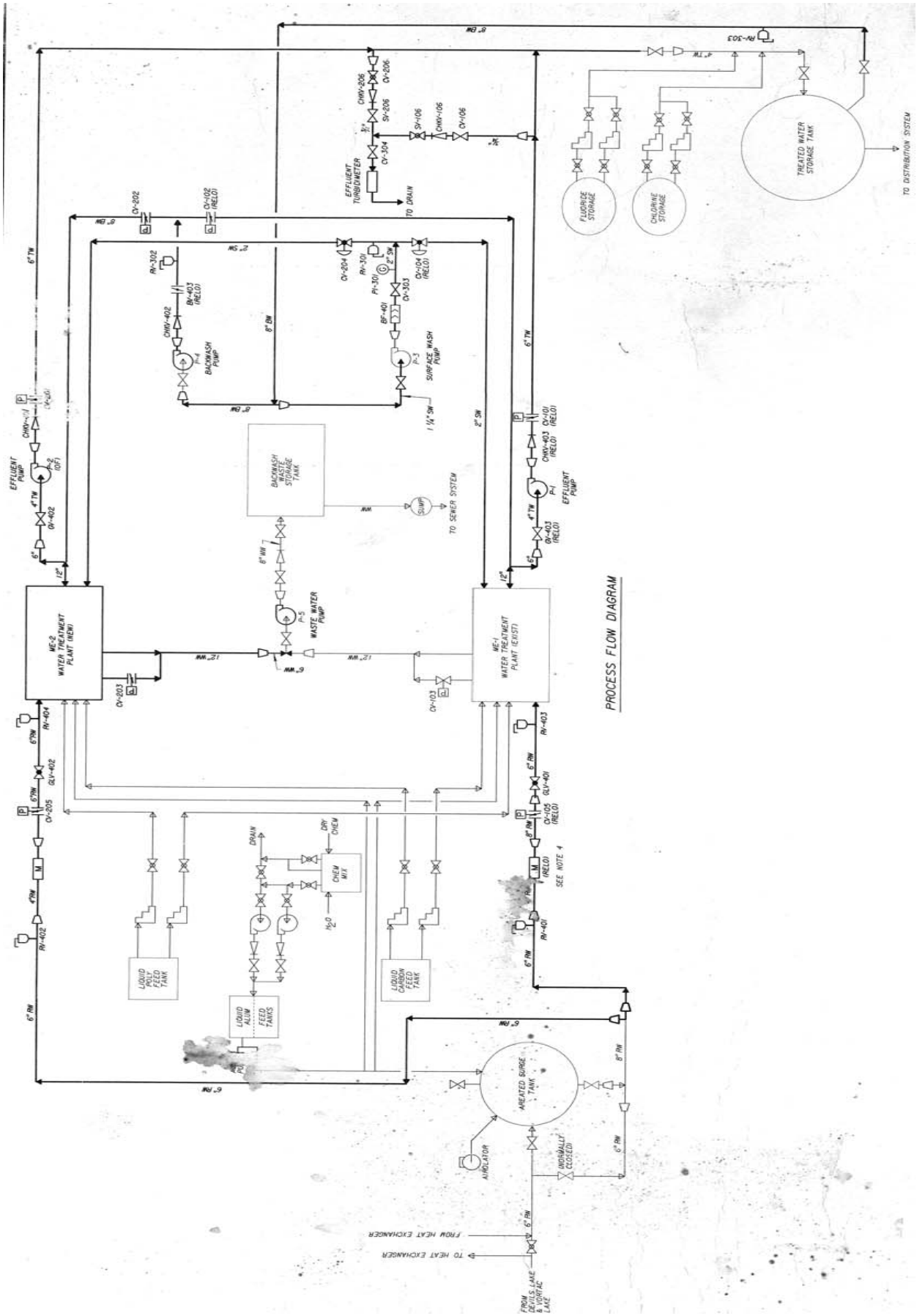

Figure 3-1 Water Treatment Process Schematic

GV Jones & Associates, Inc.
WATER AND WASTEWATER PROCESS ENGINEERS

Section 4

Regulatory Requirements, Design Criteria, and Treatment and Performance Objectives

4.0 Regulatory Requirements, Design Criteria, and Treatment and Performance Objectives

This section presents a summary of the state and federal regulatory requirements for drinking water along with design criteria and water treatment performance objectives used to develop treatment alternatives. Aspects of the proposed regulations that may affect present and future treatment practices are discussed below.

4.1 Current and Proposed Regulatory Requirements

The current water treatment and distribution system upgrades were reviewed and approved by the regulatory agencies at the time of construction with the exception of the original water system treatment plant which pre-dates the existence of the Department of Environmental Conservation. Based on discussion with the ADEC, the City is in compliance with their water system routine monitoring and permitting with the exception of the Disinfection/Disinfectant By-Products Rules (discussed below). The following sections summarize current regulatory requirements for new water treatment systems.

4.1.1 Regulatory Requirements for Water Systems

Public drinking water systems' design, operation, and routine monitoring are regulated by federal and state legislation. The US Environmental Protection Agency (EPA) has granted the State of Alaska the authority to administer federal drinking water regulations under primacy. The state has adopted the federal requirements into the Alaska Administrative Code (AAC) and designated the Alaska Department of Environmental Conservation (ADEC) as the state agency responsible for enforcement and compliance. Details on monitoring and reporting requirements are contained in the State of Alaska Drinking Water Regulations (18 AAC 80). ADEC also has a construction plan review and approval program which requires submittals for any alteration or upgrade to water systems. The process consists of a plan review submittal and request for ADEC Certificate to Construct. Upon project completion, a request is made to ADEC for a Certificate to Operate, based on completion of any stipulations and submittal of record drawings.

4.1.1.1 Current Regulatory Requirements

The water treatment system in Kotzebue is classified as a Class A community water system using surface water (Public Water System Identification Number AK2340060). In addition to establishing maximum contaminant levels (MCLs) for chemical, physical, and biological parameters, systems using surface-water sources have additional routine monitoring and

reporting requirements. Appendix A includes the most recent ADEC monitoring summary of regulatory compliance for the existing water system. Details of the monitoring and reporting requirements can be found in the State of Alaska Administrative Code 18 AAC 80. Newer rules and requirements are summarized below; specific issues related to Kotzebue are also included. The City's water treatment system is not in compliance with the current water quality and treatment requirements; specifically, they are in non-compliance for disinfection by-products. In 2005 the EPA and ADEC conducted a Comprehensive Performance Evaluation (CPE) of the water treatment plant and identified a number of operational issues. A follow-up site inspection was conducted by ADEC in September 2007 to review progress and responses (copy included in Appendix A). In 2009 the system was placed on the Significant Non-compliers List (SNC) for inadequate disinfection by-product precursor/TOC removal. The operators have since increased TOC removal by adjusting the chemicals so that they are no longer in non-compliance. The system is still exceeding the HAA5 running annual average (RAA) and has periodically exceeded the TTHM values. ADEC has stated that as long as the system is working toward upgrades and improvements, the state agency has no plans for immediate enforcement action.

The Safe Drinking Water Act (1996 amendments) also requires states to implement a source water assessment program. The assessment delineates the area that contributes to the drinking water, develops potential and existing contaminant sources, and presents a susceptibility or risk-potential evaluation. The report can be used by the community for planning purposes to establish controls to protect the source(s) of drinking water. A source water assessment of the Kotzebue water source was completed by ADEC in 2004. The overall protection area received a susceptibility rating of "high." The water system received a vulnerability rating of "low" for all six categories of contaminants.

4.1.1.2 Surface Water Treatment Rule and Interim Enhanced Surface Water Treatment Rule

The Surface Water Treatment Rule (SWTR) was published in the Federal Register on June 29, 1989, and the Interim Enhanced Surface Water Treatment Rule (IESWTR) was published on December 16, 1998. These rules are applicable to communities larger than 10,000 people. (Note: This rule was later extended to populations fewer than 10,000 by amendment as discussed below.) Under the Rule, the EPA set maximum contaminant-level goals of zero for specific disease-causing microbial contaminants. Requirements of the rule include using

filtration and disinfection processes that will result in both a prescribed level of pathogen inactivation ("log removal") and attainment of finished-water turbidity standards.

The current requirements of the SWTR are that the filtration system used, with disinfection, can demonstrate a 3-log (99.9%) removal of *Giardia lamblia* and a 4-log (99.99%) removal of viruses. The rule also requires turbidity monitoring of combined filter effluent every four (4) hours and individual filter effluent monitoring for systems using conventional or direct filtration if more than two filters are used.

4.1.1.3 Long-Term 1 Enhanced Surface Water Treatment Rule

The Long-Term 1 Enhanced Surface Water Treatment Rule (LT1ESWTR) was published in the Federal Register on January 14, 2002. This rule is a federal regulation that establishes treatment techniques to control *cryptosporidium*. It extended the requirements of the SWTR and the IESWTR to systems serving populations fewer than 10,000. The rule is applicable to systems that practice conventional or direct filtration. The rule requires a minimum of two-log (99%) removal of *cryptosporidium*, continuous turbidity monitoring of each filter (if over two filters), performance standard of a combined filter effluent of 0.3 NTU for 95% of the monthly readings (with no reading greater than 1 NTU), and disinfection profiling and benchmarking. Disinfection profiling is a graphical representation of the system's level of microbial inactivation during the course of the year, while a benchmark is the lowest monthly average microbial inactivation during the profile period.

In Kotzebue daily turbidity readings of the combined treated effluent are recorded in the operator's log with new electronic data-logging equipment installed in 2007. Data spanning the period from 2007 to date indicate that the effluent turbidity was less than 0.3 NTUs greater than 95% of the time. The combined filter effluent maximum value was less than the required 1 NTU. As such, the system was compliant with the 0.3 NTU / 95% regulation. The requirement for periodic sanitary surveys has been met with the most recent survey completed in December 2009. The next sanitary survey is due December 31, 2012.

4.1.1.4 Long-Term 2 Enhanced Surface Water Treatment Rule (LT2ESWTR)

The most recent of the surface water treatment rules is currently the Long-Term 2 Enhanced Surface Water Treatment Rule, published in the Federal Register on January 5, 2006. LT2ESWTR is meant to supplement existing regulations by focusing on those systems at the highest risk for microbial contamination and requiring greater protection for treated water in

distribution systems. Following initial monitoring, systems are assigned to risk-category bins, each with different monitoring and action requirements. All systems are required to provide 2-log *cryptosporidium* removal, but systems with higher risk may be required to provide an additional 1.0- to 2.5-log reduction. Determination of "bin" classification is based on source water for coliform sampling. Based on past low coliform reports, Kotzebue may be placed in the lowest-risk bin; the most likely effect of this rule for Kotzebue would be increased monitoring costs.

4.1.1.5 Stage 1 Disinfectants and Disinfection By-Products Rule

Research into the health effects of chlorination has demonstrated that disinfection by-products (DBPs), including total trihalomethanes (TTHMs), five haloacetic acids (HAA5s), chlorate, bromate, and other compounds, are formed when naturally occurring dissolved organic material (DOM) is exposed to chlorine. Health-effects research has indicated that ingestion of DBPs could result in cancer or other illness. As a result of this information, EPA promulgated the Stage 1 DBPR. The rule was finalized in November 1999 and became applicable to systems serving populations fewer than 10,000 on January 1, 2004 (later extended to smaller systems by the Stage 2 DDPR). The rule establishes an MCL for total TTHMs and HAA5s of 0.080 mg/L and 0.060 mg/L, respectively. For Kotzebue, compliance is based on a running annual average of quarterly samples taken from the system. ADEC placed Kotzebue on the Significant Non-compliers List for exceeding the MCL and for inadequate treatment technique (TOC removal); the City is currently working to correct the problem by upgrades to the treatment process although HAA5 values have exceeded the Running Annual Average (RAA).

4.1.1.6 Stage 2 Disinfectants and Disinfection By-Products Rule

The Stage 2 Disinfectants and Disinfection By-Products rule was promulgated January 4, 2006, to supplement the existing DBP regulations by requiring compliance with MCLs at each monitoring site in the distribution system instead of a system-wide running average. The rule requires the water system to evaluate the distribution system to find a location that has a high DBP concentration and use this as a sampling site for monitoring compliance. Rather than system-wide averages, the monitoring compliance is based on a locational running annual average (LRAA). The rule also requires systems to determine if they experience short-term "significant excursions" from normal DBP concentrations.

The D/DBP rules are applicable to all sizes of community water systems that add a disinfectant and require water systems to remove specified percentages of organic material measured as total organic carbon (TOC) if they use conventional treatment. If this removal is not possible with

current treatment, then the system is allowed to achieve the best percent removal of TOC it can demonstrate using enhanced coagulation. Enhanced coagulation is defined as adjusting the pH and increasing the primary coagulant dose to achieve greater TOC removal. The basis of the prescriptive requirement for treatment is that for source water with a high TOC, only a percentage of the TOC contributes to DBPs. By reducing the amount of TOC, DBPs presumably will be reduced to below the maximum contaminant level or at least to the best practical level. The current treatment process for Kotzebue is considered conventional filtration, thus the rules require a specified TOC removal percentage based on source water TOC and alkalinity. The fact that a system uses something other than conventional filtration does not eliminate the requirement to meet the DBP maximum contaminant level, but TOC reduction offers a reasonable and cost-effective approach toward compliance.

Based on data collected, the Kotzebue treatment system is in non-compliance with the MCL set for TTHM and HAA5. Figure 4-1 shows the HAA5 and TTHM sample results from the ADEC database. As shown, the levels of TTHM and HAA5 have periodically exceeded the MCL.

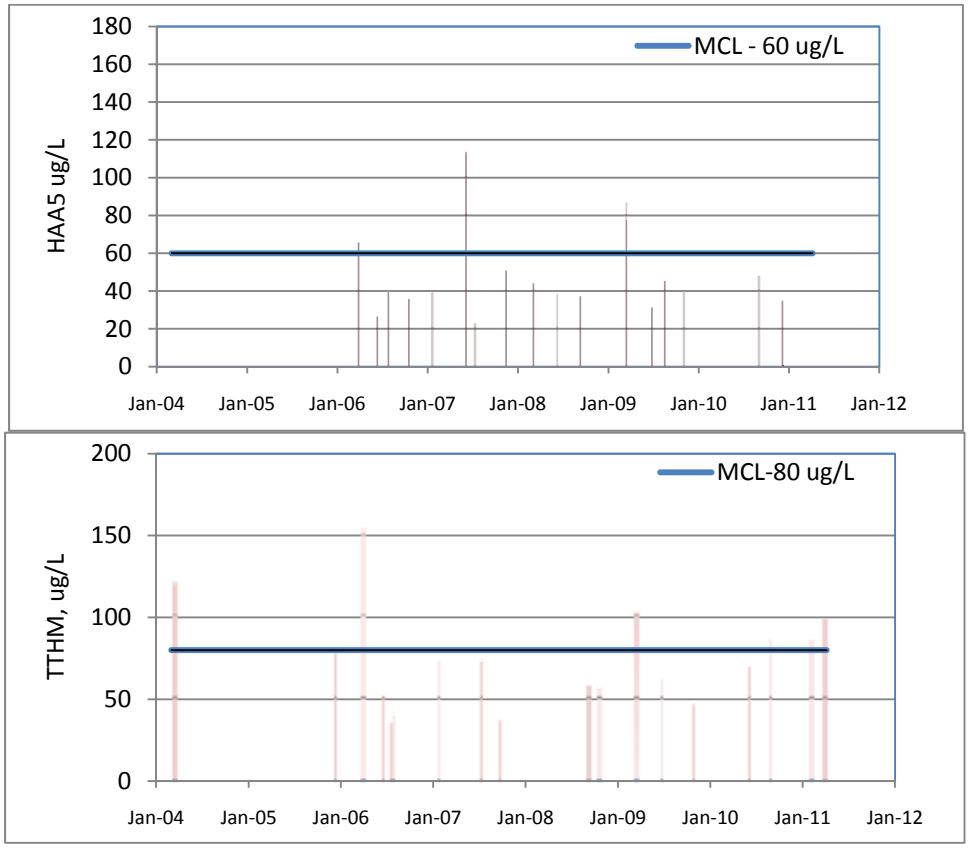

Figure 4-1: TTHM and HAA5 Sample Results

4.1.1.7 Lead and Copper Rule

The Lead and Copper Rule (LCR) was developed to limit the levels of lead and copper at consumers' taps. First-draw (stagnant) samples are collected from home taps at prescribed intervals (quarterly) to determine the 90th-percentile values which are used to determine compliance or action levels. For systems that exceed the action levels for lead (0.015 mg/L) and copper (1.3 mg/L), a three-pronged mitigation approach is required. The initial step for public water systems not in compliance with the Lead and Copper Rule is to complete a desktop study. The goal of the desktop study is to identify a corrective action program that will eliminate the lead and copper from the source water or, if the metals are coming from corroding pipe materials, to control the aggressive nature of the water. The recommendations of the desktop study are to be submitted to the state for review and approval prior to implementation. Once the corrective action program is installed, the state requires additional testing to verify that the upgrade will bring the system into regulatory compliance. In some instances follow-up testing may still result in non-compliance. If this is the case, the state is obligated to work with public water systems to optimize the corrosion-control program it approved for use, thereby achieving the best possible water quality. The Lead and Copper Rule does allow states to approve installed upgrades that have been optimized but that do not completely achieve the targeted action levels.

Figures 4-2 and 4-3 show the results of first-draw sampling for Kotzebue. Information on first-draw lead and copper samples collected prior to 2005 indicate that the Kotzebue water system exceeded the action levels for both lead and copper, but the addition of soda ash and adjustment of pH have resulted in levels below the action level for both lead and copper. As such, future treatment processes need to consider corrosion control in the design to ensure continued compliance with the rule.

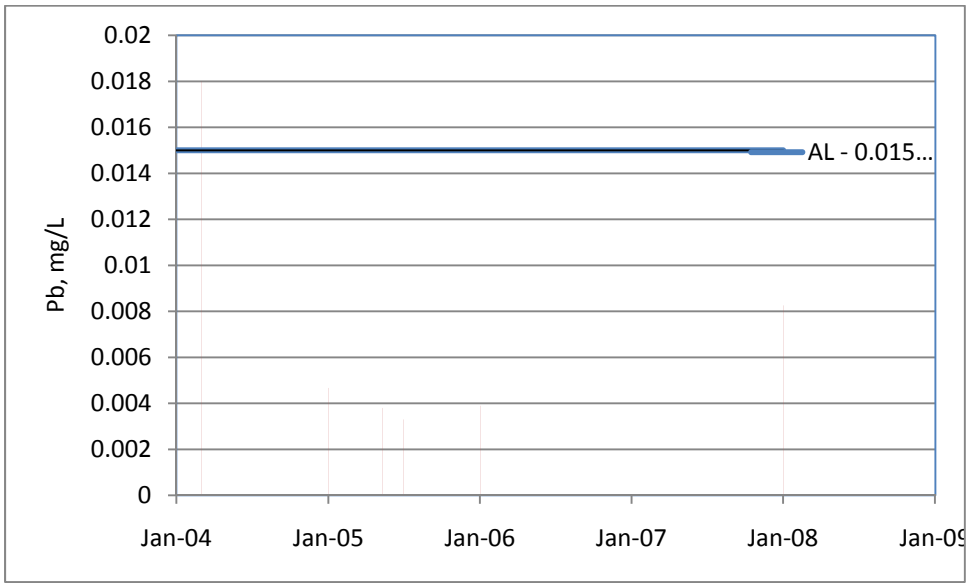

Figure 4-2: First-Draw Lead 90th Percentile Values

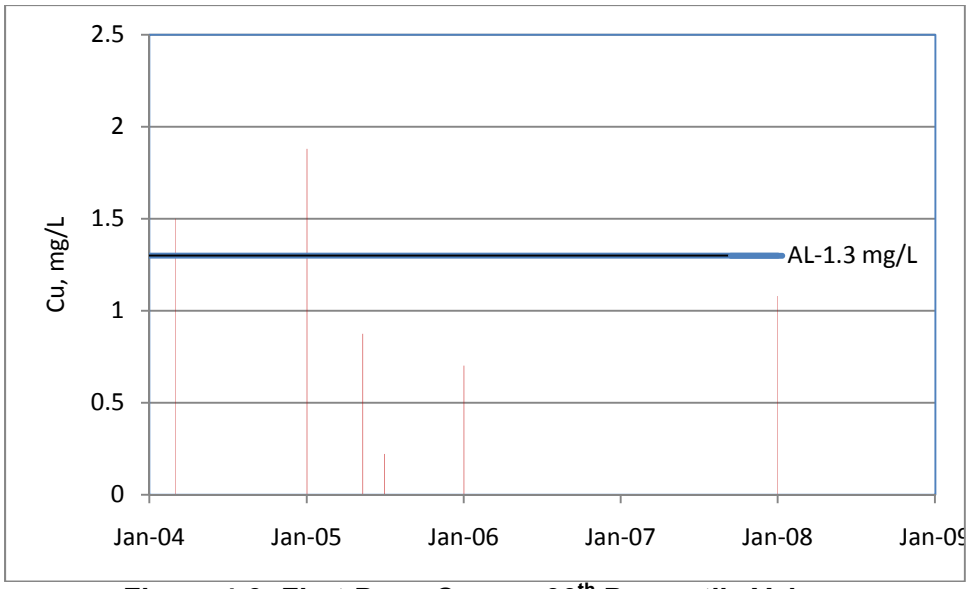

Figure 4-3: First-Draw Copper 90th Percentile Values

4.1.1.8 Arsenic Rule

The 1996 amendments to the Safe Drinking Water Act required EPA to propose an arsenic regulation which effectively reduced the MCL from 50 ug/L to 10 ug/L and to establish a monitoring framework for routine sampling that is consistent with some of the other monitoring requirements.

Available results from the ADEC drinking water database show that Kotzebue's drinking water is in compliance with the requirements of this rule. No additional compliance issues are expected for Kotzebue.

4.1.1.9 Radionuclides Rule

The Radionuclides Rule, promulgated December 7, 2000, applies to all PWSs. The rule imposes MCLs for radioactive contaminants including combined radium-226 and radium-228 at 5 picoCuries per liter (pCi/L), gross alpha particles at 15 pCi/L, beta/photon particles at 4 millirems per year, and uranium at 30 µg/L. Initial monitoring was to be completed by December 31, 2007.

A Radon in Drinking Water Rule was proposed by EPA in 1999. The rule would set an MCL of 300 pCi/L and an alternate MCL of 4,000 pCi/L for radon in drinking water. EPA is currently not publishing a schedule for final rule making.

4.1.1.10 Sanitary Surveys

Class A systems are required to complete a sanitary survey of their water systems every three years. Sanitary surveys are intended to review the overall condition of the water system, including the source, treatment, distribution and storage. A checklist format is used to determine compliance with the sanitary survey elements, and significant areas of non-compliance are resolved through compliance orders between the state and system owner. The survey is to be completed by an ADEC-certified inspector or by the state. The last ADEC sanitary survey was completed in 2009 with the next one due in 2012.

4.1.1.11 Certified Operators and Classification of Water System

A CWS must be actively supervised, as described in 18 AAC 74.010 and 18 AAC 74.410, by operators who are certified in accordance with Alaska Statutes (AS) 46.30 and 18 AAC 74. The current ADEC classification level is Class 2 with a system score of 35. The current operators and certification levels are listed in the ADEC database at: https://myalaska.state.ak.us/dec/water/opcert/Home.aspx?p=OperatorSearch.

4.1.1.12 Water Treatment Waste Water Discharge and Sludge Disposal Regulations

Water treatment waste waters may require a discharge permit unless discharged to a sewer. ADEC refers to water treatment waste waters discharge as nondomestic water treatment waste (or an industrial waste water) regulated per 18AAC72 as administered by the ADEC Industrial Wastewater Section of the Division of Water.

CFR 503.6(i) and 18 AAC 60.500(c)(5)(F) indicate use or disposal of sludge generated from drinking water treatment processes is not regulated under these respective regulations. Common water treatment sludge disposal alternatives include discharge to wastewater collection system and discharge to an onsite lagoon/holding pond. Depending on sludge production of the water treatment system, a lagoon/pond may require periodic sludge removal and disposal of solids. Removed solids may require dewatering prior to final disposal as a solid waste, and land application of water treatment solids under certain conditions may be an alternative suitable to ADEC.

4.2 Design Criteria

The following sections summarize the criteria used to design the water treatment components for future growth and development. The tables summarize design criteria for both current populations and future growth using the population projections previously presented. Estimates of water use, and other parameters, include data collected in the community, information from past project designs in Kotzebue, and values for other utilities in the region.

4.2.1 Environmental Design Criteria

Environmental design criteria were previously summarized in Table 2-2.

4.2.2 Water Use and Water Plant Flows

Water use data from daily records of the operator logs for the period from January 2007 through May 2010 were available and analyzed. Figure 4-4 shows daily water use for 2007 through 2010. Water use averaged 300,000 gallons per day (gpd) for this time period; per-capita use ranged from 95 to 100 gallons per day (population adjusted).

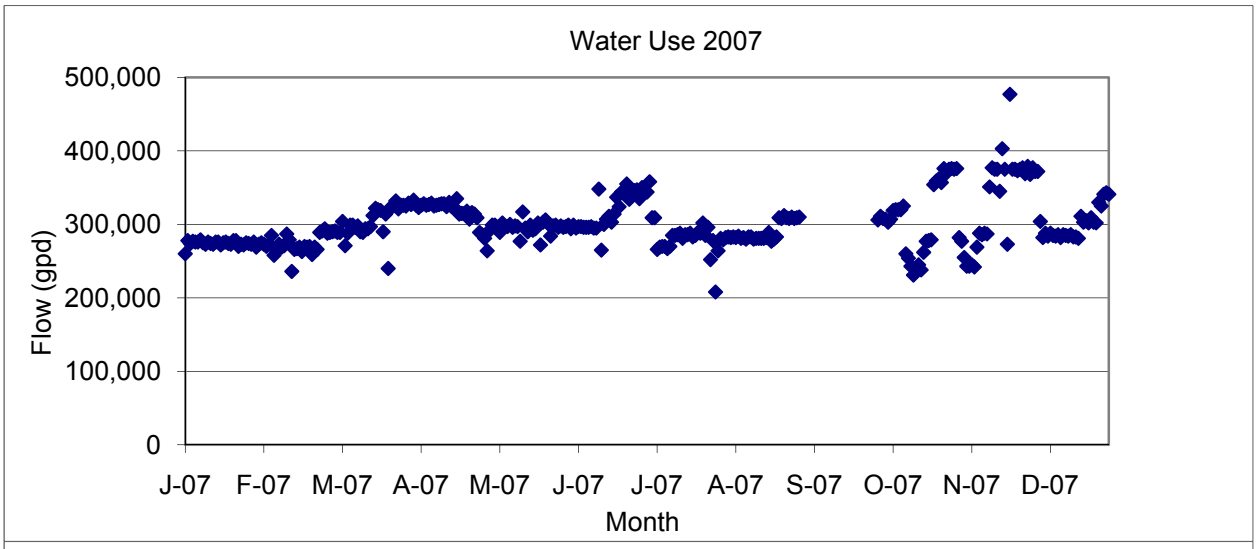
Water Use 2007
500,000
400,000
300,000
200,000
100,000
0
Flow (gpd)
J-07 F-07 M-07 A-07 M-07 J-07 J-07 A-07 S-07 O-07 N-07 D-07
Month

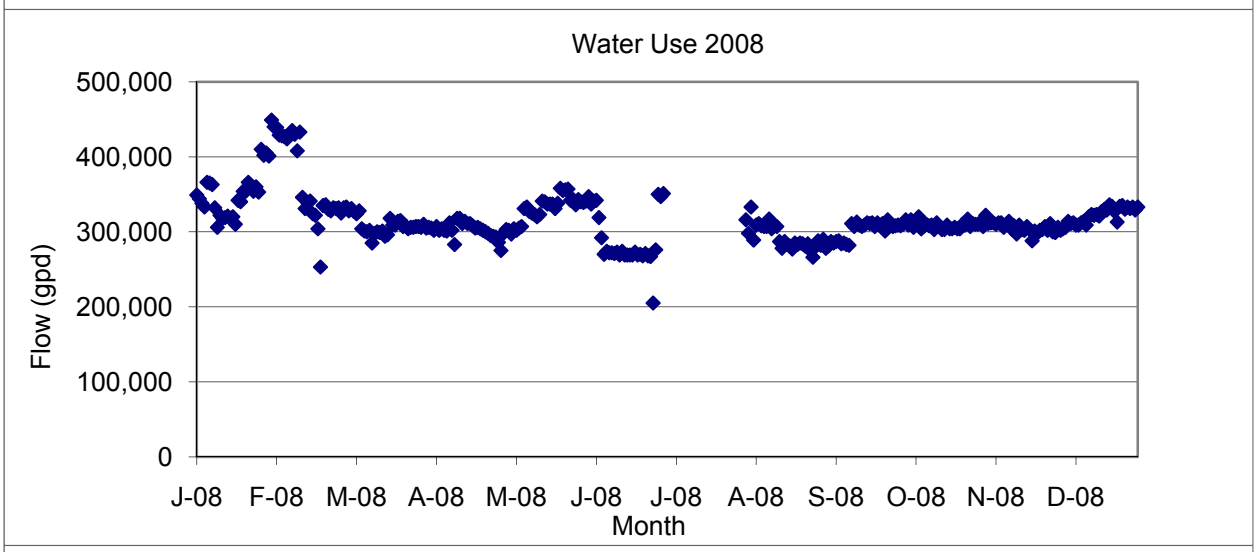
Water Use 2008
500,000
400,000
300,000
200,000
100,000
0
Flow (gpd)
J-08 F-08 M-08 A-08 M-08 J-08 J-08 A-08 S-08 O-08 N-08 D-08
Month

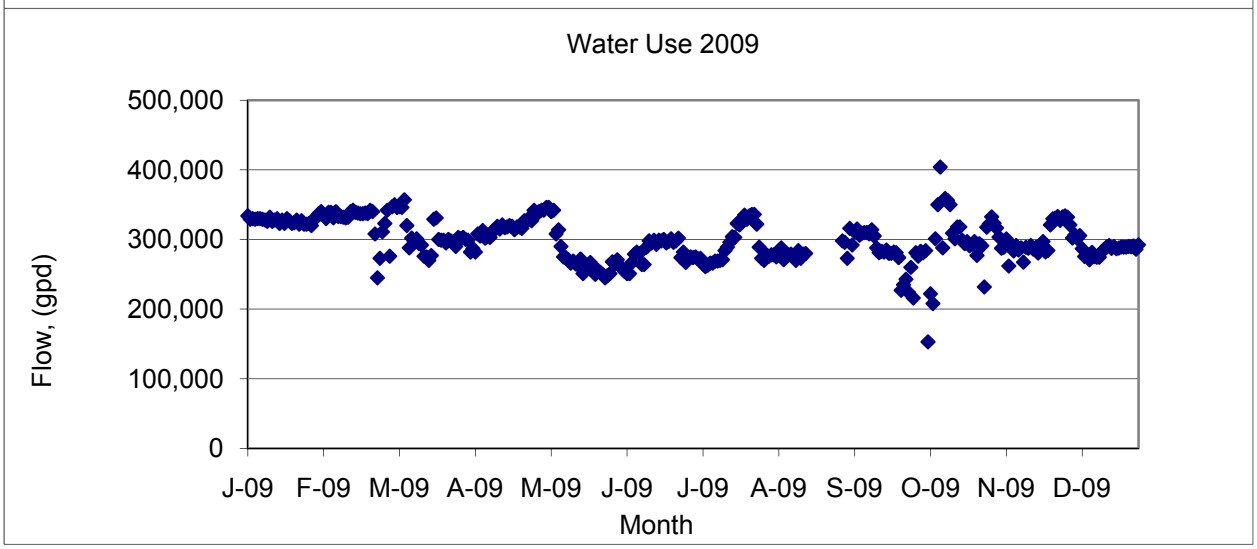
Water Use 2009
500,000
400,000
300,000
200,000
100,000
0
Flow, (gpd)
J-09 F-09 M-09 A-09 M-09 J-09 J-09 A-09 S-09 O-09 N-09 D-09
Month

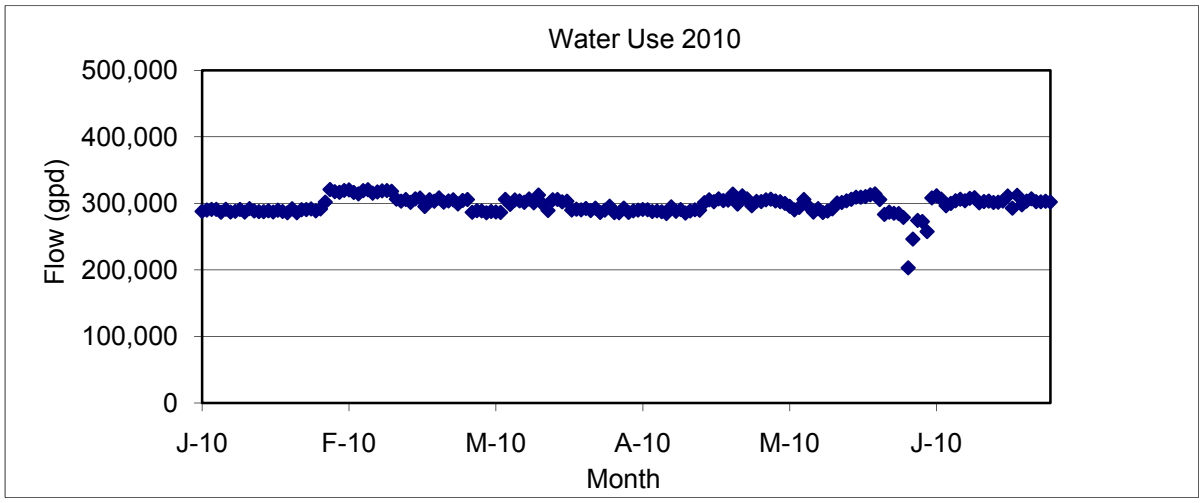

Figure 4-4: Daily Water Use 2007-2010

The proposed parameters for the water plant improvements and upgrades are summarized in Table 4-1:

Table 4-1: Water Use Unit Quantities

Parameter	2010	2020	2030	Notes/Comments
Average per capita, gpcpd	100	100	100	
Population	3,154	3,700	4,250	Linear projection
Average daily use, gpd	315,400	370,200	425,000	Current and projected population
Average daily use, gpm	219	257	295	24 hours per day operation
	329	386	443	16 hours per day operation
	438	514	590	24 hours per day operation
	657	771	885	24 hours per day operation
Maximum/average ratio	1.5	1.5	1.5	Daily water records
Peak hourly/average ratio	4	4	4	Considered typical[1]
Maximum daily flow rate, gpd	473,100	555,300	637,500	1.5 x average daily
Peak hourly flow rate, gpm	876	1,028	1,180.6	4 x average daily- used for CT calculations
Number of equivalent houses [2]	928	1,089	1,250	2009 State Demographer/4.0 people/house design population
Peak instantaneous flow rate, gpm	588	625	657	Cold Region Utility Manual [1]

[1] Smith, D.W., ed., "Cold Climate Utilities Monograph," American Society of Civil Engineers, Reston, VA, 1996.
[2] Used for peak instantaneous flow rate determination

Based on a presumed two-shift plant operating schedule, a 500-gpm net production water-treatment plant is recommended.

4.2.3 Water Treatment Design Criteria

Criteria for water treatment design and analysis are typically based on source-water quality, water-quality variation, water-quality goals, site-specific bench or pilot evaluation, or typical published values for the selected treatment processes. As a conventional filtration plant, the system capacity is based on the plant's ability to meet treated water-quality goals, with the pre-treatment process (chemical selection and addition) critical to the overall performance. Capacity potential can be based on projected maximum unit processes such as filter-loading rates or can be controlled by state regulation but is more appropriately determined by performance in producing water that meets all the water-quality goals. Although the focus of filtration is on turbidity, color, and particle removal, additional water-quality objectives may control the process selection. In particular, new regulations related to microbial inactivation and disinfectant by-products ultimately dictate water-treatment capacity and design criteria as some processes are better than others at meeting regulatory compliance. Additional discussion of this is contained in subsequent sections of this report.

The following table summarizes the water treatment process compatibility with Kotzebue's source water quality.

Table 4-2: Water Treatment Process Compatibility with Source Water Quality[1]

Treatment	Turbidity NTU	Color unit	TOC mg/L	Iron mg/L	Mn mg/L
Conventional	No Restrictions	<75			
Direct Filtration with Flocculation	<7 – 14, <20[2]	<40, <20[2]	<2.5[2]	<0.5[2]	<0.1[2]
In-line Filtration	<7 – 14	<10			
Kotzebue Raw Water	12.5	7.8	8.1	2.33	1.82

[1] Alaska Water Treatment Guidance Manual, 1994
[2] Kawamura, S., Integrated Design and Operation of Water Treatment Facilities, 2000

4.2.4 Disinfection By-Products Treatment and Control

Concern about disinfection by-products (DBPs) in drinking water dates to the first published reports of the occurrence of trihalomethanes (THMs) in 1974. Shortly thereafter, the EPA began a nationwide survey to determine the occurrence and distribution of THMs. The National Cancer Institute evaluated the health effects of chloroform, one of the THMs, and classified it as a suspected human carcinogen. In 1978 the THM regulation with a maximum contaminant level of 0.100 mg/L was adopted for communities with populations greater than 10,000. The rule was a compromise with the expectation that the MCL was readily achievable and that as experience was gained with treatment techniques, the MCL would be lowered. The exclusion of smaller

water systems was based on the concern that if smaller systems tried to alter their disinfection practices with limited practical expertise in the approach, an increased risk of microbial contamination might occur. As analytical developments improved and additional health-effects research was conducted, other disinfection byproducts in addition to the four halogenated methanes were added to the regulations, including a group of five haloacetic acid compounds (HAA5s). These two categories of disinfection by-products are of current regulatory interest based on frequency of occurrence and their potential health effects. The categories of DBPs include these halogenated organic byproducts as well as other disinfection residuals (chlorine, chloramines, chlorine dioxide) and inorganic byproducts (bromate, chlorite). The relative risk issues linked to microbial disinfection and chemical risks from organic compounds led to a negotiated approach to DBP control contained in the most recent additions to the drinking water regulations.

Natural organic matter (NOM), a mixture of humic and nonhumic substances in surface and ground water, is the primary precursor for disinfection byproduct formation. The molecular composition of NOM depends on its source as well as the conditions within the watershed. All chemical disinfectants can form various types of DBPs, with TTHMs and HAA5s forming the largest class of compounds. DBP formation is influenced by a number of factors including precursor concentration and seasonal variability. The presence of organic precursors and the formation of DBPs are increased with increasing temperatures, leading to higher chlorine demand and the need for greater chlorine addition in order to maintain residuals. This is the regulatory rationale for sampling during summer months when only one sample is required by the drinking water regulations for small systems such as Kotzebue.

The pH of the water also has an important influence on formation, with TTHM formation increasing with increasing pH while HAA5s slightly decrease with increasing pH. Disinfection of water that may contain the bromide ion, such as may occur in coastal areas, can lead to the formation of brominated DBPs. Sample results collected to date for Kotzebue show low levels of brominated DBPs, with the majority of species related to chlorine.

The concentration of DBPs increases with reaction time as may occur with longer storage. The rate, extent, and distribution of DBP formation are also affected by the chlorine dose and

residual. The nature and characteristics of the natural organic material (NOMs) have a significant effect on the levels and distribution of DBP types.

While the understanding of the details of DBP formation is far from complete, available information as to the mechanisms involved with DBP formation and occurrence as well as past experience with treatment approaches have resulted in several general courses of action to consider for small water systems. These include:

- source water control
- precursor control and removal
- alternative disinfectants
- disinfection by-product (DBP) removal
- operational controls

Additional details are discussed in subsequent sections of water treatment unit process alternatives.

4.2.5 Water Treatment and Performance Objectives

Based on the information on source-water quality, the performance objectives for the potable water treatment system are as follows:

- Removal and inactivation of microbial contaminants per state and federal regulations for surface water treatment
- Removal of dissolved organics to minimize formation of disinfection byproducts to less than 80% of the MCLs for 95% of the time
- Removal of dissolved gases (CO_2) to minimize potential for filter binding
- Ability to remove algae from treatment process feed water to extend filter operations
- Post-treatment conditioning for control of lead and copper corrosion in the treated water distribution system
- Addition of fluoride for dental hygiene
- Reduction of secondary contaminants, including iron and manganese, to 80% of the secondary drinking water limits of 0.3 mg/L and 0.05 mg/L, respectively

Alternatives to meet these objectives are developed in the next section of the report. To control microbial contaminants, surface water systems are required to both filter and disinfect as part of the overall treatment process. Most treatment systems use chlorine for disinfection primarily due to the requirements to maintain entry-point and distribution-system residuals but also to

provide a minimum 0.5-log inactivation of *Giardia lamblia* as a supplement to filtration and to provide a second barrier (18 AAC 80.635(d)).

Additional recommended performance goals for conventional filtration systems may include the following:

- Settled water turbidity of less than 1.0 NTU
- Filtered water turbidity less than or equal to 0.10 NTU 95% of the time
- Filtered water turbidity less than or equal to 0.10 NTU when the filters are returned to service from filter-to-waste operation
- Filtered water turbidity less than 0.30 NTU within 15 minutes of backwash
- Filter runs in excess of 24 hours
- Backwash and filter-to-waste of less than 5% of the total plant production for conventional or in-line filtration processes

Section 5

Need for Project

5.0 Need for Project

This section describes the need for the project; health, safety, and environmental concerns; and other factors that will be identified during the design phase of the project.

5.1 Project Need

Project need is determined by a number of factors. In some cases, regulatory concerns over public health and environmental pollution dictate the need for a project. In other cases, community concerns and proactive involvement define needs. In the case of Kotzebue, meetings with City officials and on-site visits indicate that all homes in the study area have adequate water and wastewater facilities but that the infrastructure is aging and in need of a major upgrade and improvement in order to continue to provide adequate sanitation for the future. The water treatment plant has been upgraded and expanded since initial construction in the early 1970s. During this time, the space allocated for the water circulation loop pumps and piping, along with instrumentation and controls, has become extremely congested, making maintaining and servicing equipment very difficult. A structural and electrical evaluation of the water plant building was completed in October 2006 (see Appendix G for copy of report), and building replacement or major structural upgrades and improvements were recommended.

In 2009 the system was placed on the Significant Non-compliers List (SNC) for inadequate disinfection by-product precursor/TOC removal. The operators have since increased TOC removal by adjusting the chemicals so that they are no longer in non-compliance. The system is still exceeding the HAA5 running annual average (RAA) and has periodically exceeded the TTHM values. ADEC has stated that as long as the system is working toward upgrades and improvements to the treatment plant, they have no plans for immediate enforcement action.

5.2 Health, Sanitation, and Security

Capital improvements for water and sewer positively impact the health and safety of any community. As the infrastructure ages without substantial upgrades and improvements, the overall quality of service may degrade and pose health and safety concerns to the residents. The occurrence of disinfectant by-products above the maximum contaminant level as well as lead and copper concentrations above the action level indicate that water treatment improvements are needed in order for the drinking water to be considered in compliance with the federal and state standards and for the consumers to be confident of the safety of their water. Likewise, failure to maintain the integrity of the sewage collection, treatment, and

disposal system can directly impact the health and safety of the community if sewage overflows occur. As such, water and wastewater system upgrades are important to the overall health and safety of the residents of this community.

Over the years, the number of circulation loops has been increased, resulting in very crowded conditions in the plant; this limits the ability to install new equipment such as dedicated fire pumps, which are an essential health and sanitation concern for the overall water distribution system. While the scope of work does not address the water distribution system, the inability to install code-rated fire pumps in the existing building is considered a significant defect in the overall water system.

5.3 System Operation and Maintenance

The water treatment system is maintained by a staff of dedicated employees who are ADEC-certified water system operators. The operators work to maintain and operate the plant in spite of a number of difficulties with the existing system, included limited access to the pumps and other components of the water treatment process which make repairs very difficult and time consuming. Due to these limitations, the system is confined to the additional service that can be provided. The water treatment components are periodically operated above their rated capacity to provide service to the community.

5.4 System Growth Capacity

System growth capacity is related primarily to the issue of existing water, sewer, and solid waste facilities that may be exceeding their design life or are not in compliance with current regulations. The system infrastructure continues to age beyond its original design life and merits replacement to maintain system capacity and integrity of the entire water distribution system.

Section 6

Alternative Development, Analysis and Recommendations

6.0 Alternative Development, Analysis, and Recommendations

Alternatives to meet the water treatment objectives for surface water treatment (turbidity removal, color removal, and pathogen inactivation), as well as disinfection by-product and lead and copper compliance as defined in Section 4, are presented in this section.

6.1 No Action Alternative

The “no action alternative” is normally considered in environmental reviews and is used to set a risk or cost baseline for other alternatives, which is implicit in engineering reports such as this. This “alternative” states that no action would be taken for any planning, design, or construction; there would no change in the current operation of the water plant; and no activity would be taken to reduce the risk of providing drinking water that is not in compliance with federal and state water quality standards. This alternative is an acknowledgement by the City and the agencies as to the risks and consequences and that they assume the responsibility for those risks.

Under the scenario of no action, the city water plant would operate as at present. Water service would continue as is the present case, the water quality would continue to be non-compliant with federal and state requirements, and the plant infrastructure would continue to function at the same state of conditions with the expectations that more and more of the city resources would be expended to perform repairs just to maintain the current system in operable condition. It is probable that the City would not be able to meet the needs of future users, no new services would be provided (which could limit its financial base), and at some point the City would be faced with administrative fines, penalties, and compliance orders for not complying with federal and state law.

6.2 Upgrading the Existing Water Treatment Plant

As previously noted in the scope of work, the purpose of this study was to evaluate treatment processes to upgrade the existing treatment plant, or replace it with a new facility that is capable of meeting health-based drinking water standards and bringing the facility into regulatory compliance for current and future conditions, as well as meeting the needs of the community for the next 30 years.

The following addresses methods and infrastructure configurations which might be deployed if the existing water treatment plant were to be rehabilitated rather than replaced. Rehabilitation of the existing water treatment and distribution system infrastructure would likely include the following work scope items:

1. Water treatment process
   A. Chemical Pretreatment
      i. Raw water oxidation
         (a) Replace permanganate with iron tetra oxide (ferrate) as raw water oxidant
      ii. Coagulation
         (a) Replace alum with polyaluminum chloride or ployferric chloride liquid coagulant with basicity commensurate with City's source water
         (b) Install liquid coagulant product storage tank and offloading equipment for ISO bulk containers delivered annually by barge.
         (c) Disperse dosed coagulant with mechanical rapid mixing equipment
      iii. Activated carbon
         (a) Remove and dispose of powered activated carbon slurry and dosing equipment
         (b) Organics control will be provided by upgraded water treatment process
   B. Existing two package conventional filtration units
      i. Replace horizontal flocculation paddles and immersed drive shaft with vertical mixers
      ii. Replace existing tube settler package with steeper tubes
      iii. Modify drainage of settled sludge system to accommodate sludge production rates created from processing City's surface water
      iv. Remove and replace surface coating systems
      v. Insulate tanks and process piping for condensation control
      vi. Replace granular filter media
      vii. Replace underdrain system with upgraded configuration to include air scour capability
   C. Supplemental Filtration Equipment
      i. Install new membrane filtration equipment
         (a) Dual membrane filtration including microfiltration (MF) and nanofiltration (NF) processes
      ii. Size new process equipment for the following

(a) Provide supplemental treated water production equal to the difference between the capacity of the existing two package filter plants and the targeted production capacity recommended for this project, a difference of approximately 0.44 MGD or roughly 305 gpm.

(b) Provide nanofiltration of both the MF filtrate and the filtrate produced by the upgraded existing conventional package plant filtrate flows. This enables organics removal and control of disinfection byproduct formation.

D. Post treatment

i. Use ribbon flow hydraulics in storage tanks to improve CT, minimizing short circuiting

ii. Use ortho-phosphates as alternative to soda ash for control of Pb/Cu in distribution system

E. Chemical dosing equipment

i. Remove and dispose of existing chemical equipment including chemical stock solution tanks, mixers, and dosing pumps

ii. Replace chemical equipment with updated equipment that is currently supported by their manufacturers

2. Distribution pumping

A. Provide working clearances around pumps

i. Expand/enlarge pumping room floor space

(a) Remove existing horizontal cylindrical hydropneumatic tank

(b) Replace hydropneumatic tank with smaller sized tank, approximately 500 gallons capacity

(c) Extend building footprint out to the south approximately 10 feet.

ii. Relocate pumps on new floor

B. Use variable speed drive control on circulation pumps to maintain set point distribution system temperatures

C. Upgrade instrumentation and system monitoring with SCADA

D. Process Piping and Conduits

i. Route pipe and conduits below new walking surface configured to maintain access to key elements such as valves and instrumentation

E. Pumps

i. Re-install pumps on equipment pads with top surfaces above walking surfaces in room.

   ii. Replace pump electrical raceways near pumps with quick disconnect cabling and junction boxes to enable rapid replacement of failed equipment with shelf spare

3. Building upgrades
   A. Remove and replace building enclosures over raw water metering/permanganate solution tank area, and distribution system pumping equipment area.
   B. Replace building framing, walls and roofing systems everywhere with SIPs panels rated for arctic environments and energy economy
   C. Refinish interior walls with water repellent surfaces
   D. Remove and replace lower level floor slab with insulated system
      i. In distribution pump room
         (a) Remove all pumps and piping systems
         (b) Install elevated flooring system
      ii. In remainder of plant's lower level
         (a) Remove process equipment
         (b) Remove existing floor slab
         (c) Install new insulated slab with slopes and troughs that provide positive drainage for floor and treatment process wastes
   E. Remodel upper level space to accommodate
      i. Upgraded water quality laboratory
      ii. Meeting space for training and operations management
      iii. Superintendent's office space
      iv. Documents archives storage area for drawings and operations manuals
      v. SCADA primary control station and City wide computer network interface portal
4. Mechanical plumbing, heat and ventilation
   A. Provide ventilation and temperature control for entire plant and office spaces.
   B. Upgrade toilet areas to include women's restroom
   C. Install emergency eyewash and shower stations
   D. Install fire sprinkler mist supply and distribution grid system
5. Electrical power system upgrades
   A. Install new emergency power supply generator with auto transfer switch
   B. Install new lighting system with power saving LED lighting fixtures
6. SCADA upgrades for water treatment, storage and distribution system infrastructure

6.2.1 New Dual Membrane Treatment System

As previously noted, the existing water treatment plant is configured with two each parallel conventional package plants. Currently the City operates both parallel trains at full capacity throughout the year, at an average of 0.3 MGD of potable water production. It is expected that rehabilitation of the existing plant will require removing them from service.

There are multiple options for maintaining potable water treatment and distribution operations and service to the community while the existing water treatment plant is rehabilitated. One option would be to construct new treatment production capacity for the difference between the City's existing production capacity and the treated water production rate recommended by this report of 500 gpm or approximately 0.75 MGD. For purposes of addressing the option of rehabilitating the existing water treatment plant, the additional production capacity would be furnished and installed as permanent treatment infrastructure configured as a dual membrane microfiltration/nanofiltration (MF/NF) treatment system. The downstream NF treatment train would process both MF filtrate and filtrate produced by the rehabilitated conventional treatment train so as to provide control of DBP precursors in the final treated water. The recoveries of the MF and NF equipment would be expected to be 95%, and 80%, respectively. Under these conditions, to produce a total of 500 gpm for the service area, the MF equipment would be sized to produce an average of 0.65 MGD and the NF equipment sized to produce 0.75 MGD.

The dual membrane treatment equipment would be constructed in separate building to the north of the two water storage tanks and connected to the raw water transmission main, and the backwash water storage tank for disposal of filter wash water and NF concentrate. Treated water from the dual membrane system would be directed to the water storage tanks.

6.3 Water Treatment Process Alternatives

Of the many options for water treatment, five treatment processes were considered applicable to meet the needs and treatment objectives previously defined for Kotzebue based on past experience, studies, and research. The following summarizes these alternatives and contains a discussion of alternative disinfection considerations:

6.3.1 Conventional Filtration--Enhanced Coagulation (Package Water Treatment)

Conventional filtration systems treat water by passing it through granular media filters to remove particulate contaminant. The process uses pre-treatment chemicals (coagulants) such as mono-, or polymeric inorganic iron or aluminum salts, or organic polymeric coagulant products

added to the source water. The coagulated water is slowly stirred to induce suspended particles to aggregate and form floc. Sedimentation removes some of the floc by gravity separation; the water then passes through the granular media filters to remove remaining particles. The chemical addition destabilizes the particles' surface charge, allowing them to agglomerate and readily form floc and also attach to the filter media. There are several variations in the sedimentation process including parallel plate-packing material such as lamellas, or small particles (ballasted floc), to increase removal efficiency and result in longer filter runs. Conventional filtration is effective for a wide range of source water qualities.

Enhanced coagulation and filtration together were identified as a treatment technique as part of the D/DBPR as applicable to conventional treatment plants. The treatment technique uses total organic carbon (TOC) removal as a performance measure for reducing NOMs, hence lowering DBP formation in the finished water. The rationale for the regulatory specification to remove a percentage TOC as relates to source water alkalinity and TOC is based on laboratory and plant performance data which indicated that adjustments to chemical addition, pH control, and/or addition of organic polymers were a reasonable and effective method of meeting compliance. Bench-scale and pilot-scale testing is normally conducted to determine if in fact this is the case. Enhanced coagulation becomes more difficult as alkalinity increases and TOC decreases and focuses on pH adjustments to lower levels (5.5 to 6.5), followed by optimizing chemical addition for TOC removal. A balance is required to ensure continued filtration performance based on turbidity and particle removal while increasing NOM removal through the coagulation/filtration process as well as through shorter filter runs.

A conventional filtration treatment process for Kotzebue would consist of chemical addition and mixing with in-line static mixers, flocculation, sedimentation, and filtration, followed by post-treatment for corrosion control, chlorine addition (continued on-site chlorine generation), and

Photograph – Conventional Package Treatment Plant – Coffman Cove

fluoride addition. A schematic of the treatment process is shown in Figure 6-1.

6.3.1.1 Advantages and Disadvantages

Advantages of the conventional (enhanced) treatment process include:

- The process is flexible and capable of meeting drinking water quality parameters under a variety of source water conditions.
- The treatment process, with enhanced coagulation, is recognized by EPA as capable of meeting the disinfection by-products rule.
- The current operating staff is knowledgeable about the process and capable of operating this type of treatment process.
- The system is compact and reliable under constant operating conditions.
- The system can be automated to operate unattended for limited periods of time.
- The technology is well developed and has a long history of successful operation under a variety of conditions.

Disadvantages include:

- The process is limited to relatively high source water quality. Events of elevated source water turbidity or color may result in short filter run times.
- Operator attention and control are required to ensure consistent operation over varying source water quality conditions.
- The process may not be completely effective in removal of sufficient percentage of organics to result in DBPs below the regulated limit.
- Operating costs can be high due to re-pumping and chemical addition.

A photograph of a conventional package treatment plant at Coffman Cove, Alaska is shown.

6.3.2 Direct Filtration--Pressure Filters

Direct or in-line filtration is a process similar to conventional filtration, but the flocculation and sedimentation steps are eliminated. A chemical coagulant is added to the source water and mixed to induce particle formation. As with conventional filtration, chemical addition serves to de-stabilize the particles to allow them to aggregate to form larger particles and promote adherence to the filter media. Direct filtration allows for the use of pressure filters in which the granular filter media is enclosed in a pressure-rated vessel that can operate under higher pressures and eliminate the need for breaking hydraulic head for the treatment process. The higher pressures also allow for greater head loss across the filters and longer time between backwashing. As such, it offers an economical advantage over conventional filtration in terms of

capital cost and operating expense. Direct filtration is applicable to systems with high source water quality and relatively consistent influent source water characteristics. In some cases, a flocculation tank can be added to improve performance efficiency by removal of higher solids loads and to extend the time between filter backwashes. Direct filtration systems are typically limited to source water with turbidity less than 10 NTU and peak values less than 20 NTUs in order to allow for longer filtration between backwashing, hence improving the overall plant productivity, although higher values of raw water turbidity have been reported.

A two-stage direct filtration is a modification of the direct-filtration process intended to extend the viability of direct filtration to poorer source water quality conditions or where water quality has seasonal variability. It has seen success when the first stage is used for the reaction contact time to allow for the oxidation and removal of iron and manganese as well as for use as an initial solids roughing filter, followed by a second stage which is used for turbidity and color removal. Potassium permanganate is used to oxidize the iron and manganese, followed by the first state of filtration. Turbidity and color are removed by chemical addition (metal salts and polymer) before the second filter. Figure 6-2 is a schematic of a two-stage direct-filtration process for Kotzebue.

6.3.2.1 Advantages and Disadvantages

Advantages of direct or in-line filtration include:

- Direct filtration with the correct use of cationic polymers has been effective in removing a sufficiently high percentage of organics such that DBP formation levels are below regulated limits.
- The roughing filter ahead of the primary filter can remove a greater percentage of the solids, hence extend the time between backwashes.

Photograph – Direct Filtration Treatment Plant – Kake

- A smaller footprint results because the flocculation and settling steps as used in conventional filtration are eliminated.
- Few pumps are required to transfer the treated water; pressure from source through treatment occurs as the water remains under pressure.
- Higher headloss through the filter media can be sustained, resulting in longer filter run times.
- Higher loading rates can result in small footprints. There is greater ability to control filtration rates by adjustments to the feed pumping rate.

Disadvantages include:

- The process may not be completely effective in removal of a sufficient percentage of organics to result in DBPs below the regulated limit, less so than conventional treatment plants.
- The process is relatively inflexible under changing source water conditions. High solids-loading results in more frequent backwashing, hence lower production rates.
- Inspection of the filter media can be difficult.

A photograph of a direct filtration water plant is shown. Source water quality may limit this option.

6.3.3 Ion Exchange (MIEX and Conventional or Direct Filtration)

Humic substances can be removed by selective anion exchange due to the negative charges at near neutral pH. One proprietary process (MIEX) uses a continuously stirred reactor vessel to exchange portions of the DOC with the resin. Resin is fed to a gravity separator where it is recovered, regenerated, and returned to the raw water at the head of the process. In the separator, the fine resin beads magnetically agglomerate into rapidly settling particles, allowing for high resin recovery. The ion exchange process is normally combined with conventional or direct filtration to remove turbidity and other particulate matter. Recent pilot work by ANTHC at several locations has given promising results, with plans underway for full-scale installation at a community in Southeast Alaska.

The media is regenerated with a brine solution, which eventually must be disposed of. This may be an issue for Kotzebue as the current filter backwash is discharged to the sewer system which discharges to the City's wastewater treatment lagoon. Water treatment waste waters (i.e., backwash, concentrate, regeneration waste) not discharged to sewers are required to be

permitted under the ADEC's regulatory requirements which may include individual or general permits through the Industrial (Nondomestic) Wastewater Section. Depending upon receiving environment conditions, disposal practices for brine wastes may require special consideration. Figure 6-3 and 6-4 are schematics of these processes.

6.3.3.1 Advantages and Disadvantages

Advantages of the MIEX and conventional or direct filtration treatment processes include the following:

- MIEX has been shown to be effective as a pretreatment step to remove dissolved organics and DBP precursors.
- The process is unaffected by increases in turbidity and results in relatively low head loss.
- No chemical addition is required to precondition the raw water prior to use.

Disadvantages include:

- Limited practical operating experience with cold, arctic water sources. Saxman in Southeast Alaska is considering installation of a MIEX process.
- Product must be shipped "wet" and is subject to freezing, which can damage the resin. As such, warm storage of material is required. This also adds to the shipping weight, increasing the cost in remote portions of Alaska in which air or barge shipment is expensive.
- The resin must be regenerated with brine solution; the cost of chemical shipping (salt) can be expensive.
- Disposal of spent regenerate brine may be an issue to the biological wastewater treatment process, such as the existing facultative wastewater lagoon.
- A percentage of the resin must be periodically replaced due to abrasive damage.

6.3.4 Membrane Filtration (Microfiltration/Nanofiltration)

Two methods of membrane treatment are considered. Tubular membrane nanofiltration (NF) is a membrane filtration process that is able to reject large molecular contaminants including those responsible for creating color and DBPs. A roughing filter able to remove particles and debris larger than 400 microns is needed ahead of the tubular membranes. Tubular membrane elements are 1/2-inch-diameter elements which are inserted into a pressure vessel to create a module. Permeate is collected on the outside of the membrane, with a small fraction of the concentrate wasted and the majority recycled and combined with the raw water stream. Tubular membranes are not as easily fouled by particulates and only a limited amount of pretreatment is

required. Some manufacturers use an automated cleaning process where a foam ball is periodically run through the elements to scour off the fouling material on the membrane surface. A high-flow velocity is also maintained through the elements to reduce fouling.

Spiral-wound nanofilters are more commonly used in membrane systems where production capacity exceeds 30,000 to 60,000 gallons per day (gpd). They consist of flat sheets of membrane material and a spacer channel which are then wrapped around a central perforated tube to form membrane elements. These elements are inserted into a pressure vessel, and individual pressure vessels are then operated in a hydraulic array. The construction results in a large membrane surface area relative to the smaller volume of the pressure vessel.

Without adequate pretreatment for particle removal, spiral-wound membranes are subject to fouling; as such, they are typically preceded by pretreatment processes for greater particulate removal. One effective pretreatment alternative for spiral-wound NF membranes is deployment of microfiltration (MF) or ultrafiltration (UF) membranes. The MF or UF membranes are able to provide excellent removal of colloidal material and produce feed water to downstream spiral-wound NF membranes that significantly reduces NF cleaning requirements.

Typical NF configurations are able to recover 75% to 85% of the influent raw water as permeate. Because no chemical addition is required during normal operation, the treatment is simple to operate and relatively stable; normal operation is fully automatic and controlled by a microprocessor. Chemical cleaning is typically required every three to four months and consists of preparing a relatively low-strength caustic solution and acid (such as citric acid) or hypochlorite solution. Each solution is re-circulated for approximately one hour, the membrane rinsed, and the process repeated, with total cleaning time of three to four hours.

Both tubular and spiral-wound membranes have been used in Alaska to treat surface water containing high concentrations of TOC, specifically for TTHM and HAA5 control. For Kotzebue, a spiral-wound NF membrane configuration would be used to meet anticipated production capacity. Dual-membrane MF/NF systems are operating successfully in Alaska at 7 sites all using tundra-pond source waters. An 8th project is currently in construction. Figure 6-5 is a schematic of this process.

6.3.4.1 Advantages and Disadvantages

Advantages of the membrane treatment process include:

- Membrane treatment systems for removal of organics have been very effective in producing very high-quality drinking water in Alaska under a variety of source water and operating conditions.
- They have higher removal efficiencies for removal of microorganisms, turbidity, and other inorganic constituents.
- Chlorine demand of finished water is lower and more stable than other media filtration processes, which allows for lower chlorine addition.
- They are a mechanical process which relies on valves and pumps for effective operation. They can be automated to reduce the amount of operator time and control.
- Lower chemical costs occur with a resulting lower solids disposal volume.
- The size of the modular unit is relatively small.
- The system can be readily expanded with the addition of modules as demand increases.

Photograph – Microfiltration/nanofiltration Treatment Plant – Barrow

Disadvantages include:

- Membranes must be periodically removed from service for chemical cleaning; this period may range from once each three to four months, or even longer.
- Membranes must be replaced periodically; common frequencies are on the order of 5-7 years, although longer durations are being experienced.
- They are able to convert feed water at 75-80% (20-25% waste or concentrate).

A photograph of a microfiltration/nanofiltration water treatment plant is shown.

6.3.5 Alternate Water Source (Sea Water / Shallow Well/ Reverse Osmosis)

This alternative is proposed due to the potential limits of the source water quantity and operational costs of pumping and heating the raw water (the evaluation of which is beyond the scope of this study). EPA has determined that the use of seawater as a drinking water source does not meet the definition of a surface water as defined in the Surface Water Treatment Rules. As such, the multi-barrier, performance-based treatment objectives of filtration and disinfection required for treatment of fresh surface waters do not apply to seawater desalination. Therefore, the primary treatment objective for potable water production from seawater is to reduce source water total dissolved solids (TDS) concentrations to less than the recommended regulatory limit of 500 mg/L. Of course, removal of TDS results in the removal of the larger microbial-sized particles and by nature is effective in removal of those contaminants of health concern. Secondary water quality objectives include producing stable final water that is non-corrosive and maintains the disinfection residual in the storage and distribution system for longer periods of time due to the very high water quality produced.

Desalination of seawater is commonly achieved by either thermal distillation or membrane filtration. Thermal distillation is commonly deployed where waste heat or energy is inexpensive and available. Membrane desalination of seawater uses reverse osmosis membranes and therefore the process is referred to as seawater RO or SWRO. The Red Dog mine uses a SWRO process that operates on water produced by a beach well. The advantage of using sea water wells as source water is that the pretreatment requirements are significantly diminished.

Similar to NF membranes, SWRO membranes for systems as large as would be required for Kotzebue would be configured as spiral-wound membranes. For Kotzebue, pretreatment for this process could be provided with natural seabed filtration using wells as an intake structure.

The SWRO process requires membrane filtration to operate at high pressure. Fortunately, there are alternatives available to reduce energy consumption by configuring the process to include mechanical energy recovery devices. The amount of pressure is related to the salinity of the source water processed. For Kotzebue, salt water dilution caused by the influence of the Noatak River water may further reduce process-energy requirements.

Disadvantages of this type of system for Kotzebue are twofold: one, the uncertainty of developing the water source, which may be challenged due to occurrence of permafrost and

history of offshore disposal of community wastes, and two, the relatively low treatment process recovery rate, which would require a relatively large array of membranes. Figure 6-6 is a schematic of this process.

6.3.5.1 Advantages and Disadvantages

Advantages of the SWRO membrane treatment process are similar to the NF/MF and include:

- The source water is relatively close to the treatment plant and eliminates the need for maintenance and operation of a long source water transmission line.
- The quantity of source water is not limited, assuming sufficient yield can be obtained from the existing sub-seabed geologic formations.
- Pre-filtration from the seabed material eliminates the need for any pretreatment, with the exception of scale inhibitor.
- Due to the pumping energy required, heat is added through the treatment process.
- There is no requirement to meet chlorine contact time as required for a fresh water source, based on the determination that seawater is not a surface water source. Likewise, there should be no obligation for other requirements of the Surface Water Treatment Rule (such as surface water sanitary surveys).
- A lower operator-certification level may result due to reduction in the number of chemicals and the nature of the treatment process.
- Permeate from the SWRO process would be expected to have a high quality.
- Chlorine demand of SWRO permeate is lower and more stable than for granular media filtration processes operating on fresh tundra water sources which allow for lower chlorine addition.
- Both SWRO and NF/MF are mechanical processes which rely on valves and pumps for effective operation that can be automated to reduce the amount of operator time and control.
- Lower chemical costs occur with a resulting lower solids disposal volume.
- The size of the modular unit is relatively small.
- The system can be readily expanded with the addition of modules as demand increases.
- The process configured with a sub-seabed intake structure is not impacted by the occurrence of seasonal algae in the water column.

Disadvantages include:

- The availability and quality of seawater from bank or seabed filtration can be determined only through geotechnical evaluation such as test well drilling, which is a relatively expensive operation. Results cannot be determined prior to construction.
- Membranes must be periodically removed from service for chemical cleaning; this may range from one to three months, or even longer.
- Membranes must be periodically replaced; common frequencies are on the order of 5-7 years, although longer durations are being experienced.
- They are able to convert feed water at 40-50% (50%-60% waste or concentrate), which must be disposed of through the sewer system or ocean outfall.
- High-pressure pumps (on the order of 800-1200 psig) are required.
- The intake screens of the wells may plug periodically.
- As with other treatment processes, post-treatment for corrosion control may be necessary.
- A larger volume of water consisting of brine must be disposed of, presumably back to the ocean as an outfall pipeline which will require regulatory permitting and approval.

6.3.6 Dissolved Air Flotation (DAF) Pre-treatment

Dissolved air flotation (DAF) is a pretreatment process used to remove suspended material by dissolving air under pressure in a flotation tank or basin. The air forms small bubbles which rise and adhere to the suspended material; this then floats to the surface for removal by skimming. Feed water can be added after the addition of the primary coagulants. The process has the advantage of removal of algae and other larger particles which may clog filters or not be effectively removed during sedimentation. This pretreatment step may also have the advantage of dissolved gas removal (carbon dioxide, etc.), which may form under-ice due to anoxic conditions and may lead to off-gassing and reduced filtration rates due to binding. As such, this process can be used seasonally in response to source water quality conditions.

6.3.6.1 Advantages and Disadvantages

Advantages of dissolved air flotation include:

- Algae and other particles are removed prior to their entry into the filters; this can extend the operating cycle and result in greater overall throughput.
- Dissolved gases, as may be present in the winter months, are effectively removed during the process and do not result in filter binding.

- Large floc is not required, which results in a lower chemical addition requirement, thus saving in chemical costs.
- High loading rates may result in smaller footprints.
- Effectiveness of solids removal results in longer filter runs due to reduced solids loading on the filters.
- A higher solids concentration results, saving on solids handling costs.
- Process is relatively rapid in start-up.
- Operates well under a variety of source water conditions.
- Process improves with decreasing water temperatures.

Disadvantages include:

- Operating cost due to air blower requirements can be high.
- Addition of air can result in moisture issues within the enclosed structure during winter conditions.
- Convective heat loss from the water due to cold air addition can be problematic during extreme cold events (the addition of heat from the air compressor partially compensates for these conditions; cold-region aeration has been practiced for many years in wastewater lagoons).
- Addition of air can result in super-saturated water conditions, which may be an issue with filter operations.

6.3.7 Alternative Disinfection

In lieu of treatment processes to remove dissolved organics, options to alternative disinfectants other than chlorine have been used. Options for alternative disinfection include ozone, chlorine dioxide, chloramination, and UV. Ozone requires downstream treatment to remove the organic byproducts of oxidation that would support the growth of biomass in the storage tanks and distribution systems. Most systems that add ozone follow the process with chlorination to provide a nominal residual. This may be problematic for surface waters high in organics but may be appropriate if sufficient amounts of the organics can be removed prior to disinfection. Ozone followed by a secondary disinfectant such as chlorine at a much-reduced concentration has been used, but the formation of DBPs below the MCL would need confirmation prior to installation.

Chlorine dioxide has been used in some installations but may not be a good option for Kotzebue. On-site generation and subsequent degradation form inorganic DBPs and the handling and storage of the materials needed for its use are hazardous.

Chloramination is the most common method used by water systems which have DBP-compliance problems and whose operators select an alternate disinfectant. This may be an option for Kotzebue as well, but additional testing is needed to decide whether (1) NDMA, an unregulated DBP, is formed at significant concentrations; (2) the source water includes significant concentrations of organic nitrogen which would react with the chloramines and render them ineffective as disinfectants; (3) there would be significant taste and odor issues with the dosed water; and (4) there would be any significant nitrification of the dosed water leading to biological re-growth in the distribution system. Recent experience with conversion of chlorine to chloramination has resulted in secondary results on water quality including increases in lead released from the water distribution piping and damage to pipeline rubber gasket o-rings.

UV disinfection would be satisfactory as a primary disinfectant but would have to be coupled with a secondary disinfection process that would (1) achieve a measurable residual, (2) provide control of biological growth within the storage tanks and distribution systems, and (3) provide more efficient inactivation of viruses. As with ozone, the use of a lower level of chlorine as a secondary disinfectant may lead to lower DBPs below the MCL but would need to be confirmed before being implemented. The advantage of using UV combined with chloramination as opposed to using chloramination alone is that the combined UV/chloramination process would provide a more effective inactivation of the regulated pathogens with much less CT (for the chloramines).

6.4 Water Treatment Manufacturers' Recommendations

Based on the prior evaluation of alternatives, information requests were sent to eight (8) manufacturers which specialize in water treatment equipment. The request included a summary of the available source water information and treatment objectives. Five (5) manufacturers responded with recommendations to meet the treatment objectives as well as with planning-level budgetary information, estimated operation costs (electrical and chemical), and other information. All vendors recommended that pilot plant evaluations be completed prior to design to ensure that performance objectives could be met and to refine process design criteria. Pilot studies are standard industry practice in order to establish design and operating parameters for

full scale design. The following summarizes equipment recommendations using the general treatment methodologies previously summarized. Copies of the proposals are contained in Appendix E. A schematic layout for each of the processes is also included in this appendix.

6.4.1 Gravity Conventional Filtration—Package Plant (Tonka Equipment Corporation)

This package water treatment plant is similar to the existing treatment process equipment in which chemicals are added both for oxidation of the iron and manganese and for turbidity and color removal. Enhanced coagulation, consisting of pH adjustment and primary coagulant optimization, is conducted to establish chemical constituents and feed rates but is expected to include potassium permanganate, pH adjustment, and primary coagulant (alum or ferric sulfate), and polymer. A 30-min floc chamber, followed by tube settler clarification and mixed media filtration at 3 gpm/sf is proposed. Chlorine would continue to be added to provide a residual. Planning-level budgetary equipment costs received for this study was $964,000 (assuming two parallel trains from the proposal), with a 40-foot-wide by 20-foot-long footprint for each. A photograph of the treatment process is shown.

Photograph – Tonka Equipment Unitized Treatment System (UTS)

6.4.2 Gravity Conventional Filter with GAC Media—Package Plant (Roberts Water Technologies)

This package water treatment plant is also similar to the existing treatment process equipment in which chemicals are added both for oxidation of the iron and manganese and for turbidity and color removal. Enhanced coagulation by pH adjustment and chemical addition is assumed, and the manufacturer also assumes that sufficient TOC cannot be removed. The filter media is proposed to be granular-activated carbon (GAC), with an expected replacement every 1-3 years. Chlorine would continue to be added to provide a residual. Planning-level budgetary

equipment costs received for this study was $370,000. The equipment manufacturer estimates approximately 2 hours per day of operational control and estimated chemical costs of $431 per day. A photograph of the treatment process is shown.

Photograph – Roberts Filter Pacer II System

6.4.3 DAF-Conventional Filtration-Nanofiltration (Corix Water Systems)

This proposal anticipates that oxidation of iron and manganese will occur (with potassium permanganate), followed by a treatment package consisting of dissolved air flotation (DAF), gravity filtration, and nanofiltration (NF). The process would consist of two trains of DAF and mixed-media filtration rated at 320 gpm, followed by a single train of nanofilter membranes. Details include:

- Flocculation time: 17 minutes
- DAF surface loading rate: 3.56 gpm/ft^2
- Filter surface loading rate: 3.56 gpm/ft^2
- Air scour: 2.5 scfm/ft^2 at 3 psig
- Backwash rate: 15 gpm/ft^2 (1350 gpm at 45 ft TDH)
- 5 micron pre-filters
- NF feed pumps: 2 each 625 gpm @ 230 psig
- Recovery: 80%
- Flux: 14.3 gfd
- Membrane type: Hydranautics ESNA-LF2. Two stages:
    - Stage 1 □ 12 vessels with 7 – 8”x40” elements
    - Stage 2 – 6 vessels with 7 □ 8”x40” elements
- CIP system:
    - Sodium bi-sulfate, anti-scalant, pH balance
    - Pump – 288 gpm@65 psig
- 1500-gallon chemical tank (heated)
- 2500-gallon waste tank

Planning-level budget proposal is $522,000, with an estimated daily power use of 158 kWh and daily chemical cost of $117. A proposed equipment layout is shown.

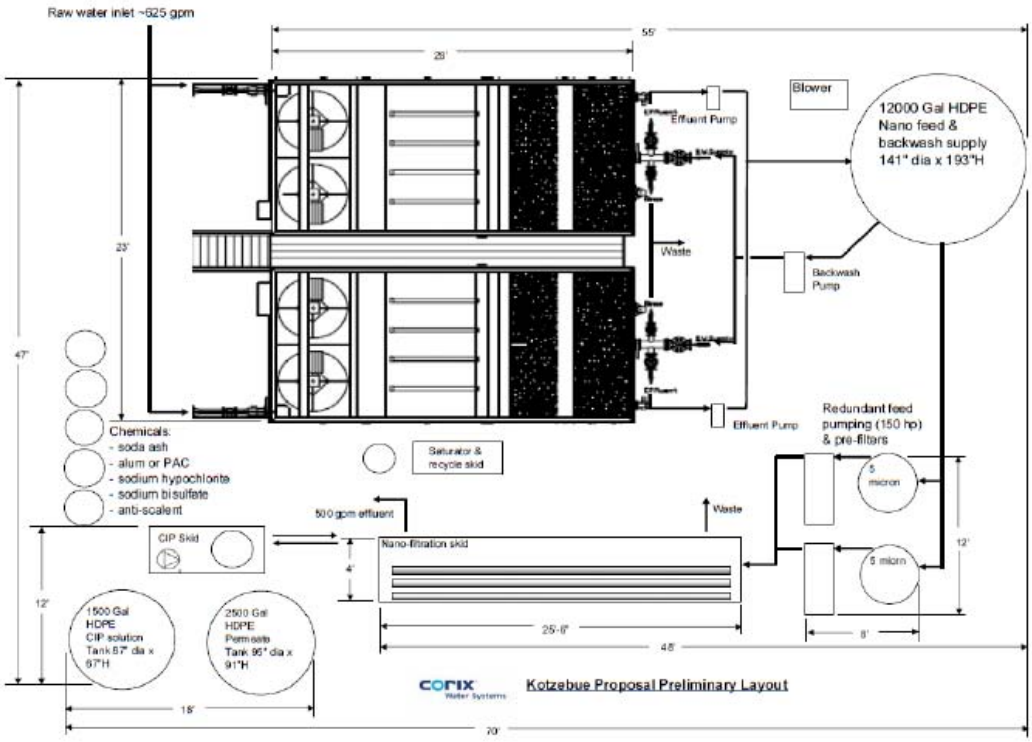

6.4.4 Oxidation—Immersed Membrane Ultrafiltration (GE Z-Box (Zenon))

This packaged system consists of an enhanced coagulation system followed by an immersed, low-pressure ultrafiltration membrane system. The membrane replaces the clarifier and granular media filter. Water flows from the outside of the fibers into the hollow tubes by means of the permeate pumps creating a vacuum on the elements. Periodic back-pulsing by reversing the flow dislodges particles on the outside of the fibers; supplemental air is introduced at the bottom of the modules to create turbulence on the outside surface to restore permeability. Specific details include the following:

- 300 micron self-backwashing pre-filter
- Enhanced coagulation system
    - Coagulant feed
    - Static mixer
    - Flocculation tank with mechanical mixer
    - pH adjustment
- Membrane tank
- 44 modules
- Permeate pump
- Membrane air scour

- CIP
    - Pump
    - Tank
    - Chemical feed system

Planning-level budget proposal is $1,496,000. A graphic and proposed equipment layout are shown.

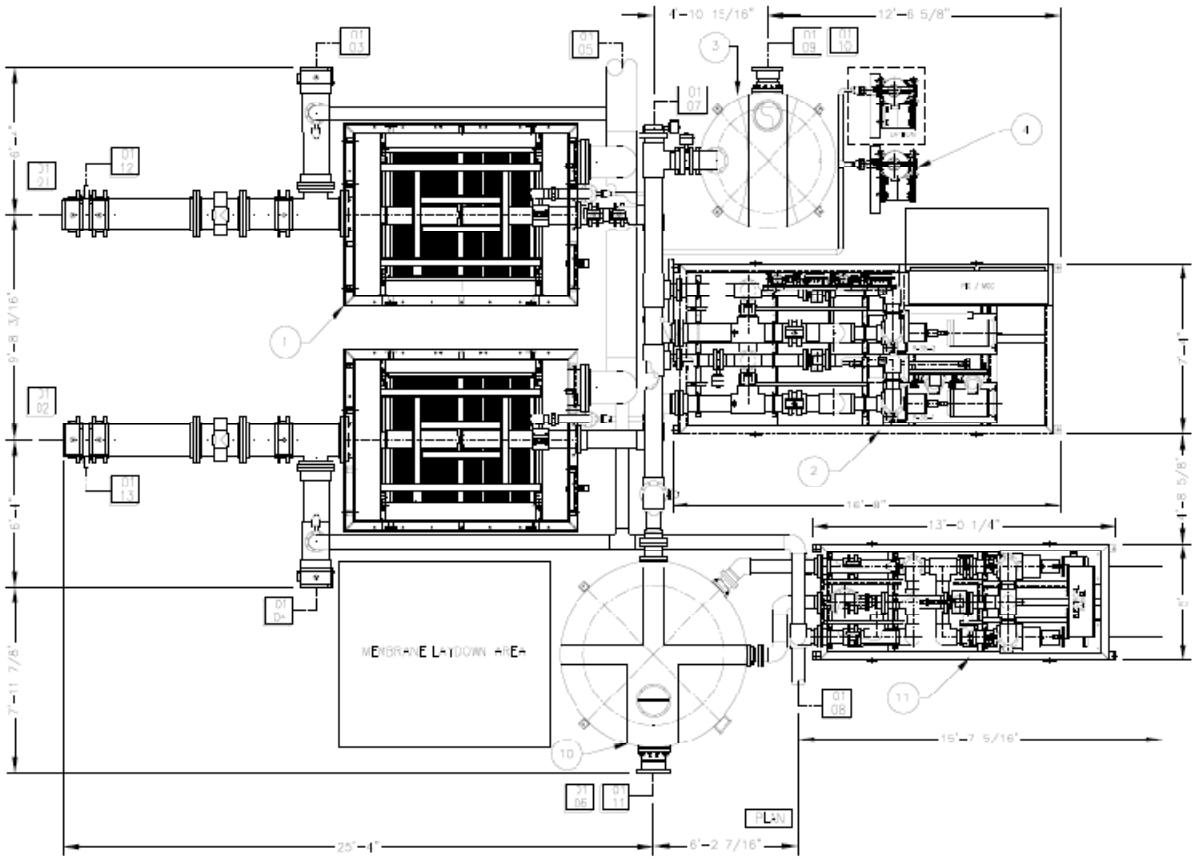

6.4.5 Oxidation—Membrane Microfiltration (Pall Corporation Aria AP system)

This system consists of a 300-micron pre-filter, feed/recirculation tank, feed pump, microfilter hollow-fiber modules, and CIP pumps and tanks. Specific details include:

- 300-micron Filtomat 104 C self-backwashing pre-filter
- Feed pump: 30 hp 3-phase centrifugal
- Return flow pump: 20 hp 3-phase centrifugal
- Feed tank: 1,100-gallon HDPE
- Return flow tank: 1,100-gallon HDPE
- Microfilters:
    - 32-6”x80” Pall 0.1-micron filters
    - Flux: 500 gfd
- Air compressor
- CIP tank:
    - 2,500-gallon HDPE with heater
    - 3 hp, 3-phase transfer pump

The total estimated weight is 5,715 lbs. Planning-level budget proposal is $475,000. A graphic of the skid system is shown below:

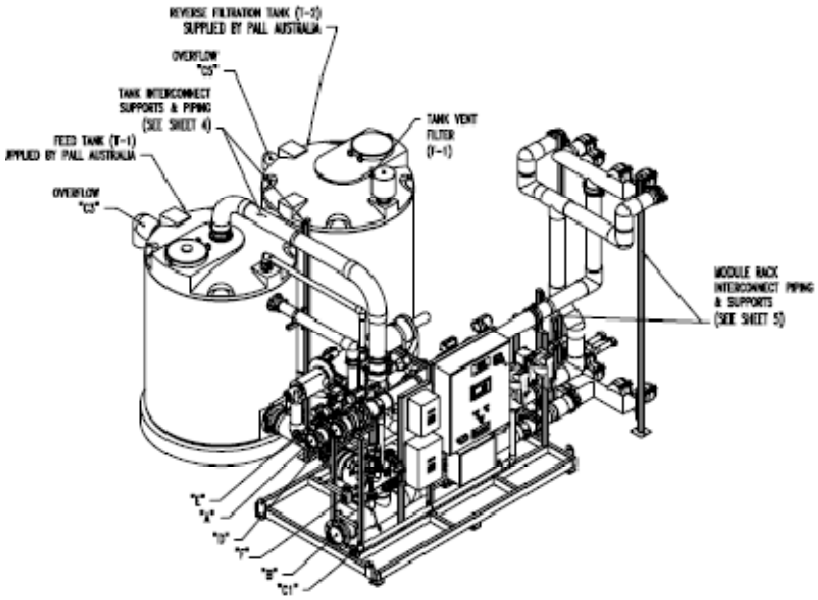

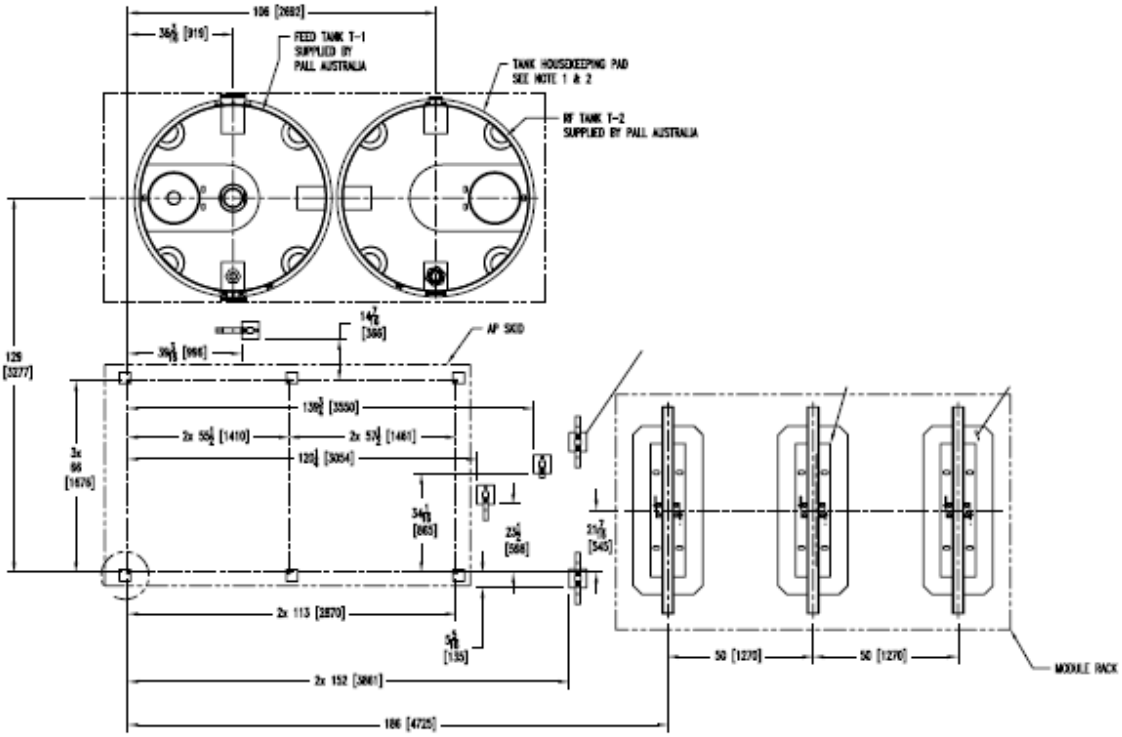

6.4.6 Microfiltration/Nanofiltration (Pall Corporation AP System)

This system consists of two main unit processes, a microfiltration module and a nanofiltration module. Raw water passes through an initial pre-filter to remove larger particles; the pre-filter is followed by flow through the microfiltration module which consists of a sequence of pressure vessels. Feed pumps provide up to 100 psig pressure to maintain a constant flow and produce between 80-85% filtrate. The filtrate is then pumped through the nanofiltration module. Higher pressures are required (150-300 psig), and less filtrate is produced (75-80%). Over time, as the membranes foul, feed pressure is increased to maintain a filtrate set-point. Periodically during the day, the modules will go through a reverse flow/air scrub. A more thorough cleaning consists of a maintenance clean or clean in place (CIP) in which the system is taken off line and warmed; cleaning chemicals are then circulated through the system. The frequency depends on the source water quality and varies from 1 to 3 months. The duration of CIP is on the order of several hours. Cleaning chemicals typically consist of citric acid (2% solution), sodium hypochlorite (300 mg/L), and sodium hydroxide (1%). Depending on source water quality, an anti-scalant may be required prior to water entry into the nanofilters. This prevents the formation of scale on the membranes caused by the reduced pressure and solubility

considerations of the minerals in the source water. Specific manufacturer's details as to size, weight and cost were not provided in time for report completion. It should be noted that a continuous stream of concentrate (waste water from the treatment process) is generated. A preliminary estimate is on the order of 30-35 gpm. This continuous stream would be disposed of to the city sewer system. Since there is no back-wash of a filter, there is no need for a surge tank, which can be removed during the course of construction. An estimated construction cost prepared from similar projects is included in the following section.

6.5 Lead and Copper Treatment and Control

Sampling results for first-draw lead and copper analysis from the distribution system prior to 2005 show non-compliance with the Lead and Copper Rule (LCR). The addition of soda ash to filtrate prior to treated water storage has resulted in compliance with the LCR action levels although elevated levels of copper continue to occur. Depending on the treatment process selected, continued lead and copper control in the treatment plant is anticipated as the finished water quality is expected to differ from the current process.

The EPA's *Lead and Copper Guidance Manual, Volume II Corrosion Control Treatment* provides recommended treatment alternatives for control of lead and copper corrosion. Depending on water chemistry, there are several alternative treatment options that may be used. The manual considers alkalinity, calcium, and pH as key criteria in screening treatment alternatives; EPA-recommended treatment alternatives include carbonate passivation and/or addition of phosphate or silicate inhibitors.

Carbonate passivation is the process by which a metal pipe is protected against corrosion by metal complexes formed on the pipe surface. Although these may be metal carbonates, as is the case in carbonate passivation, this technique is different from calcium carbonate precipitation where a layer of calcium carbonate is formed on the pipe to prevent corrosion.

Phosphate addition is a second EPA-recommended means of corrosion control. Phosphate added to water is intended to develop a metal-phosphate film on the wetted surfaces of the distribution system, protecting the pipe from corrosion. However, the film is subject to removal by erosion or periodic exposure to low pH conditions as might result from biofilm formation or changes in source water quality. To maintain the phosphate film integrity, a maintenance dosage of 1-5 mg/L of phosphate is added to the water entering the distribution system. Historic

success with phosphate inhibitors has been highly variable and difficult to predict. Phosphate addition alone has been very successful with some waters while in others, phosphate addition must be complemented with pH or other water condition adjustments.

EPA's third recommended alternative is the use of silicates to form a protective film on the wetted surfaces of the distribution system. Silicates can act as sequestering agents for soluble iron and manganese and therefore have an advantage if the source water includes high concentrations of these contaminants. Use of silicates is less common than phosphates for corrosion control. It is believed that the film formed does not bond as well to the wetted surface as the phosphate film and can occasionally slough off, resulting in turbid water at the tap. Historic success with silicate inhibitors has been highly variable.

After a new treatment process has been selected, a re-evaluation of the methods to reduce lead and copper concentrations will likely be required.

6.6 System Classification and Operator Considerations

The State of Alaska classifies water treatment systems based on the system size, source, and treatment unit processes. Points are assigned to different categories, and the total is used to establish a system class. The system class determines the qualification requirements or operator levels needed to operate and maintain the system. Details of the classification system are contained in state regulations (18 AAC 74). The state reserves the final determination of system classification to the DEC. Table 6-1 was prepared based on information provided in the manufacturers' proposals and on a preliminary scoring of the different treatment options. As noted, the DAF-conventional-nanofiltration process would result in an increase to a Class 4 system from the current Class 3 designation. Of note is that the membrane (ultrafiltration) and microfiltration/nanofiltration options score a Class 2 designation. Details of the scoring are contained in Appendix D.

Table 6-1: Water Treatment Process Classification Estimates

Alternative Treatment Process	Classification
Gravity Conventional Filtration – Enhanced Coagulation	3
Gravity Conventional Filtration – Enhanced Coagulation – GAC	3
DAF- Conventional Filtration– NF Membrane Filtration	4
Oxidation - Immersed Membrane Ultrafiltration	3
Oxidation - Membrane Microfiltration	2
Microfiltration/Nanofiltration	2
Rehab Existing WTP and New MF/NF	4

6.7 Comparative Concept-Level Costs

The concept-level costs presented here are not based on preliminary design, include a significant contingency factor, and represent a rough order of magnitude accuracy range of +30% to -15%. The estimates include percentage factors for contractor overhead and profit, bonding, design engineering and construction services costs, contract administration, regulatory permitting and legal, as well as geotechnical and surveying. Estimated operations and maintenance (O&M) costs include labor, fuel for heating the building structure, as well as electrical and chemical costs specific to the treatment alternatives. Many assumptions were made for this concept-level cost analysis which should be confirmed prior to initiating final design.

6.7.1 Water Treatment Plant Capital Costs

Concept-level estimates of the total capital cost for the treatment plant alternatives are presented in this section. Conceptual design was completed using the criteria and regulatory requirements previously presented. Estimates of capital costs were solicited from several manufacturers of equipment based on available source water quality information and pilot testing previously completed by the City. Table 6-2 summarizes the capital costs for the alternative treatment processes. These costs show the budgetary costs from the equipment manufacturer as well as estimated construction costs which include a percentage allowance for miscellaneous equipment, metals, materials shipping, and labor for installation of equipment, along with an allowance for instrumentation, electrical, mechanical, and related contracting expenses as a percent of equipment costs. The third cost column includes the total estimate of capital costs including a new building and related building specific components (HVAC, electrical, mechanical, etc.), yard piping, demolition and site preparation, or other appurtenances necessary for completion of a new water treatment plant and pumping facility. The cost estimate does not include the demolition of the existing treatment building and components. Appendix D contains details and assumptions used to develop the estimates in the table. A separate cost estimate has been prepared and also includes the appendix for demolition of the existing water treatment plant. This cost is estimated to be $588,000 and is not included in the capital cost for the water treatment plant total.

Table 6-2: Capital Costs for Alternatives

Alternative Treatment Process	Installed Process Equipment Cost Estimate	Total Construction Cost
Gravity Conventional – Enhanced Coagulation	$3,035,341	$14,010,000
Gravity Conventional – Enhanced Coagulation – GAC	$1,528,050	$12,500,000
DAF – Conventional – NF Membrane Filtration	$3,357,843	$14,330,000
Oxidation - Immersed Membrane Ultrafiltration	$4,330,181	$13,230,000
Oxidation - Membrane Microfiltration	$1,671,925	$12,640,000
Microfiltration/Nanofiltration	$2,660,434	$11,560,000
Rehab Existing WTP and New MF/NF	$2,160,000	$22,140,000

Figure 6-7 shows a graphical comparison of the capital costs of the alternatives.

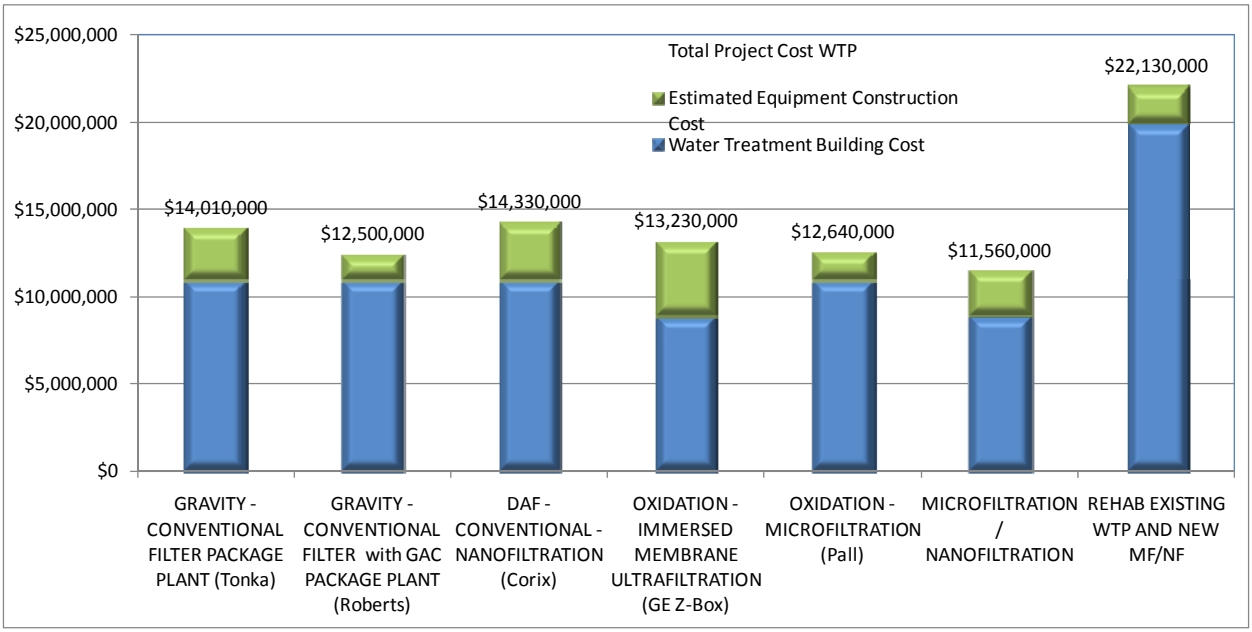

Figure 6-7: Capital Costs of Water Treatment Process Alternatives

6.7.2 Water Treatment Plant Operation and Maintenance Costs

The estimated operation and maintenance costs for the alternative treatment processes include costs for electricity and treatment chemicals and were provided by the equipment manufacturers or estimated from similar processes. Costs for building operations (heating), administration, operations labor, laboratory analyses, insurance, and other consumables are also estimated for each of the alternatives. Full or partial depreciation of the capital investment is not included in order to allow for comparison between alternatives only. Details of the assumptions used and

basis for the operation and maintenance costs are provided in Appendix D. Table 6-3 summarizes water treatment process operation and maintenance costs.

Table 6-3: Operation and Maintenance Costs for Alternatives

Alternative Treatment Process	Annual O&M Cost
Gravity Conventional – Enhanced Coagulation	$569,000
Gravity Conventional – Enhanced Coagulation – GAC	$825,000
DAF – Conventional – NF Membrane Filtration	$617,000
Oxidation - Immersed Membrane Ultrafiltration	$532,000
Oxidation - Membrane Microfiltration	$560,000
Microfiltration/Nanofiltration	$553,000
Rehab Existing WTP and New MF/NF	$852,000

Figure 6-8 is a graphic representation of the operation and maintenance costs components of the process alternatives.

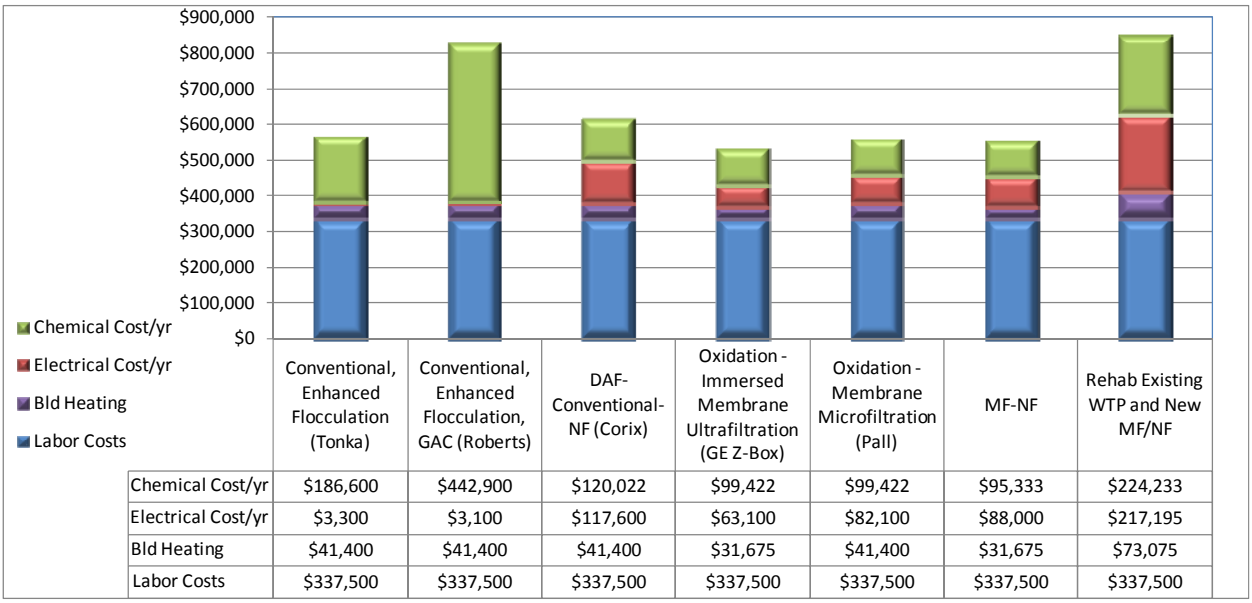

	Conventional, Enhanced Flocculation (Tonka)	Conventional, Enhanced Flocculation, GAC (Roberts)	DAF-Conventional-NF (Corix)	Oxidation - Immersed Membrane Ultrafiltration (GE Z-Box)	Oxidation - Membrane Microfiltration (Pall)	MF-NF	Rehab Existing WTP and New MF/NF
Chemical Cost/yr	$186,600	$442,900	$120,022	$99,422	$99,422	$95,333	$224,233
Electrical Cost/yr	$3,300	$3,100	$117,600	$63,100	$82,100	$88,000	$217,195
Bld Heating	$41,400	$41,400	$41,400	$31,675	$41,400	$31,675	$73,075
Labor Costs	$337,500	$337,500	$337,500	$337,500	$337,500	$337,500	$337,500

Figure 6-8: Alternative Treatment Process Annual Electrical and Chemical Costs

6.7.3 Present Worth Analysis

Present worth or value analysis is used to compare alternatives that include a capital expenditure and a series of estimated annual expenditures while combining the time-value of money through selection of a reasonable interest rate. For example, a higher capital cost may be offset by lower annual costs over a given time period, presumably the operating life of the facility. A present-worth analysis of the alternatives proposed by the process manufacturers was completed using the capital and annual operation and maintenance costs. The 30-year interest

rate (2010) from Appendix C of OMB Circular A-94 was used in the analysis. Figure 6-9 summarizes the net present worth of the alternatives.

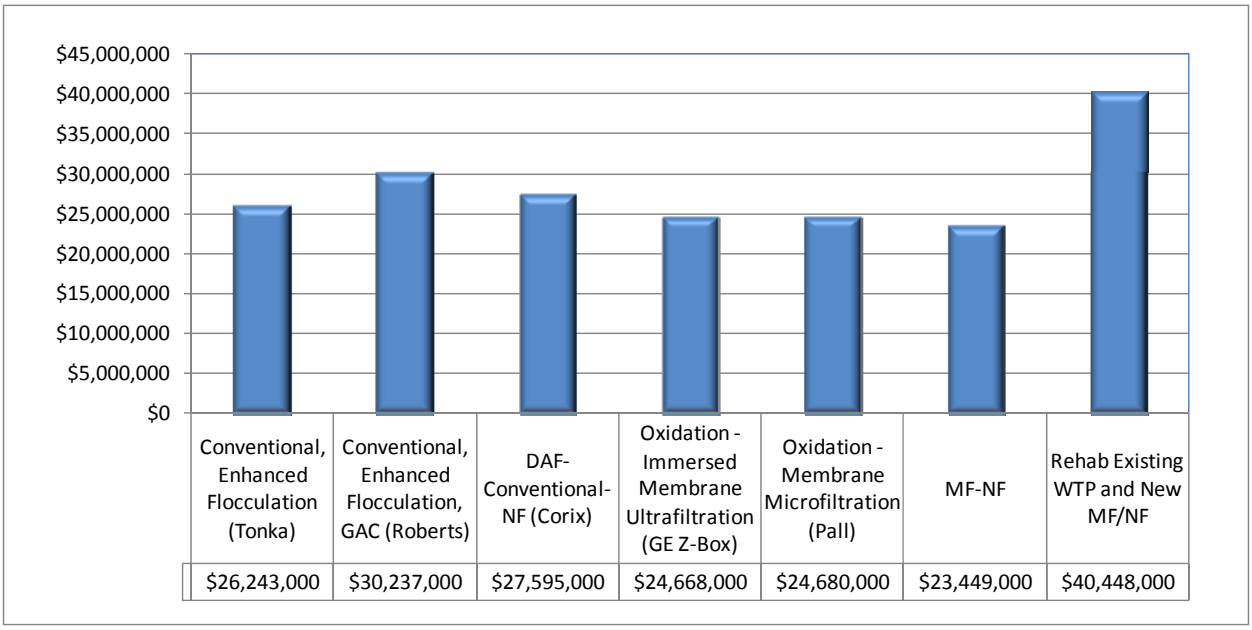

Figure 6-9: Present Worth of Alternative Treatment Process

The feasible alternative with the lowest life-cycle cost is the alternative that should be selected from an economic perspective. As shown, with the exception of the alternative to rehabilitate the existing treatment plant, the differences between life cycle costs for the remaining alternatives are within the range of uncertainty. That is, non-monetary selection criteria become critical in the treatment process selected, as discussed below.

6.8 Water Treatment Process Selection

All the above water-treatment alternatives have been effectively used in different parts of Alaska under a variety of source water quality conditions to meet the water quality treatment objectives previously defined. Each has certain advantages and disadvantages in addition to capital or operation cost differences.

With the exception of the option to rehabilitate the existing water treatment plant, differences between the present worth values among alternatives are small and dependent on assumptions made in cost estimations. In addition to ranking alternatives based only on cost criteria, selection matrices can be used. A selection matrix prepared for all the alternatives identified, and populated with evaluation criteria can be used as a quantitative technique to identify, analyze, and compare the advantages of the alternatives. Evaluation criteria used may be subjective as long as they are determined to be important to the selection process.

The selection matrix consists of establishing a set of evaluation criteria upon which the options can be scored, assigning weights to reflect the relative importance of some of the criteria over others, designing a scoring system, rating each of the alternatives, and summing the scores to gain a total score which allows order ranking. The advantage to the approach is that it allows subjective opinions to be objectively incorporated and also allows a method of sensitivity study to see how much an opinion might have to be changed in order for a lower-order-ranked alternative to be competitive. Two general categories of criteria are typically established for engineering projects: the first is monetary components, including capital cost, operation and maintenance costs, and life-cycle costs. The second category includes non-monetary criteria, such as ability to meet current and future regulations, process reliability, maintenance requirements, ease of operation or expansion, and operator certification requirements.

For purposes of this study, the following criteria are developed for use in the scoring matrix:

1. Capital Costs—These costs include those associated with the treatment process and support equipment, as well as a new building structure and those associated costs. The costs include typical bid-construction costs including overhead and profit, contingency, and engineering and construction services.
2. Operation and Maintenance Costs—These are costs based on an assumed annual operator rate, including burdened costs. They consist of the costs associated with the treatment process but do not include the other daily activities associated with the overall operation of the water distribution system. Electrical costs and fuel costs were estimated from published rates previously summarized in this report. Chemical costs were based on estimated treatment requirements and current vendor pricing.
3. Life-cycle costs are based on an assumed interest rate of 2.3% and duration of 30 years as published in the OMB Circular A94 using the “real” treasury interest rates.
4. Ability to Meet Current/Proposed Regulations—This criterion intends to rate the ability of the treatment alternative to meet current and proposed regulatory requirements based upon the known water quality.
5. Ability to Meet Possible Future Regulations—This criterion intends to rate the ability of the treatment system to meet possible future regulatory requirements based upon the known water quality. This criterion is somewhat subjective since predicting future regulatory requirements is difficult at best; but, for example, future regulations may include lower MCLs for existing DBPs or inclusion of additional regulated DBP

compounds. As such, a system with greater ability to remove TOC may be better suited to meet possible future DBP regulations.

6. Process Reliability—This criterion is a representation of generally known reliability of treatment systems in regard to consistency of filtrate quality, as well as filtration media/device integrity.
7. Maintenance Requirements—This criterion provides a relative comparison between the alternatives and the existing system in regard to maintenance of the filtration equipment. For example, systems with more pumps and appurtenances will require more maintenance.
8. Ease of Operation—This criterion intends to rate the treatment system in regard to the ease of operation which may include equipment reliability, ease of maintenance such as media replacement, and ease of chemical addition/dose adjustment.
9. Ease of Expansion—This criterion rates the ease of expanding the filtration equipment for additional filtration capacity. It may take into account filter footprint, piping and valving, and control systems, as well as the need for more or less operating staff.
10. Certification Requirements—This criterion serves to review the ADEC regulations for scoring and classifying treatment systems; it also provides a rating of alternatives relative to each other. ADEC exclusively scores and classifies treatment systems and, as such, scoring used by the consultant team in this analysis may vary from that determined by ADEC.
11. Viability to Design and Construct—This criterion represents the likelihood that the selected process can be reasonably constructed and is intended to reflect the uncertainty associated with the development of a groundwater source of sufficient quantity for the SWRO process.

Table 6-4 presents the criteria in a comparative selection matrix format. Relative criteria scoring was developed by the consultants for the alternatives developed in this report. A score of 1 is least desirable and a score of 5 is most desirable or favorable. Weighting factors are critical considerations in the alternative scoring in that they reflect the importance of some criteria over others. For example, operational costs may be more important to the local government if capital costs are from a grant; this may not be the case if bonded indebtedness is required. Weighting factors were developed for this report but may be revised by the owner or grant-funding

agencies; a weighting factor of 1 represents least importance and a factor of 5, most importance.

In forming the selection matrix, the alternative of rehabilitating the existing water treatment plant was not evaluated. The present worth analysis showed this alternative to be an outlier with significantly higher costs compared to other alternatives, and therefore it was not included in the selection matrix evaluation process.

Figure 6-10 is a graphical representation of this information showing the weighted values of the various parameter scores, along with the estimated capital costs, annual operation and maintenance expense, and present-worth analysis values.

The results of this matrix evaluation of the alternatives indicate that the microfiltration-nanofiltration treatment process scores the highest for the combined factors.

Table 6-4: Alternative Treatment Process Selection Matrix with Criteria Scoring and Weighting

Criteria 1 = least desirable 5 = most desirable	Conventional – Enhanced Coagulation	Conventional – Enhanced Coagulation – GAC	DAF-Conventional - Nanofiltration	Oxidation - Immersed Membrane (Ultrafiltration)	Oxidation - Membrane Microfiltration	NF/MF Membrane Filtration	Weight 1 = least important, 5 = most important
MONETARY							
Capital Cost	3	4	2	3	4	5	3
Operation and Maintenance Cost	5	3	4	5	5	5	5
Life Cycle Cost	3	2	3	4	5	5	5
TOTAL WEIGHTED SCORE MONETARY*	49	37	41	54	62	65	
NON-MONETARY							
Meet Current/Proposed Regulations	1	2	5	4	4	5	5
Meet Possible Future Regulations	1	2	5	3	3	5	4
Water Quality / Public Health	1	2	5	4	4	5	4
Process Reliability	5	5	4	4	4	4	5
Maintenance Requirements	2	2	3	3	3	3	5
Ease of Operation	2	2	3	3	3	3	4
Ease of Expansion	1	1	4	4	4	4	4
Certification Requirements	2	2	1	3	3	3	2
Viability to Construct	4	5	5	5	5	5	5
TOTAL WEIGHTED SCORE NON-MONETARY*							
	84	102	155	142	142	159	
COMBINED WEIGHTED SCORE*	133	139	196	196	204	**224**	

* Highest scores represent alternatives most desirable as compared to criteria and weighted importance of that criteria

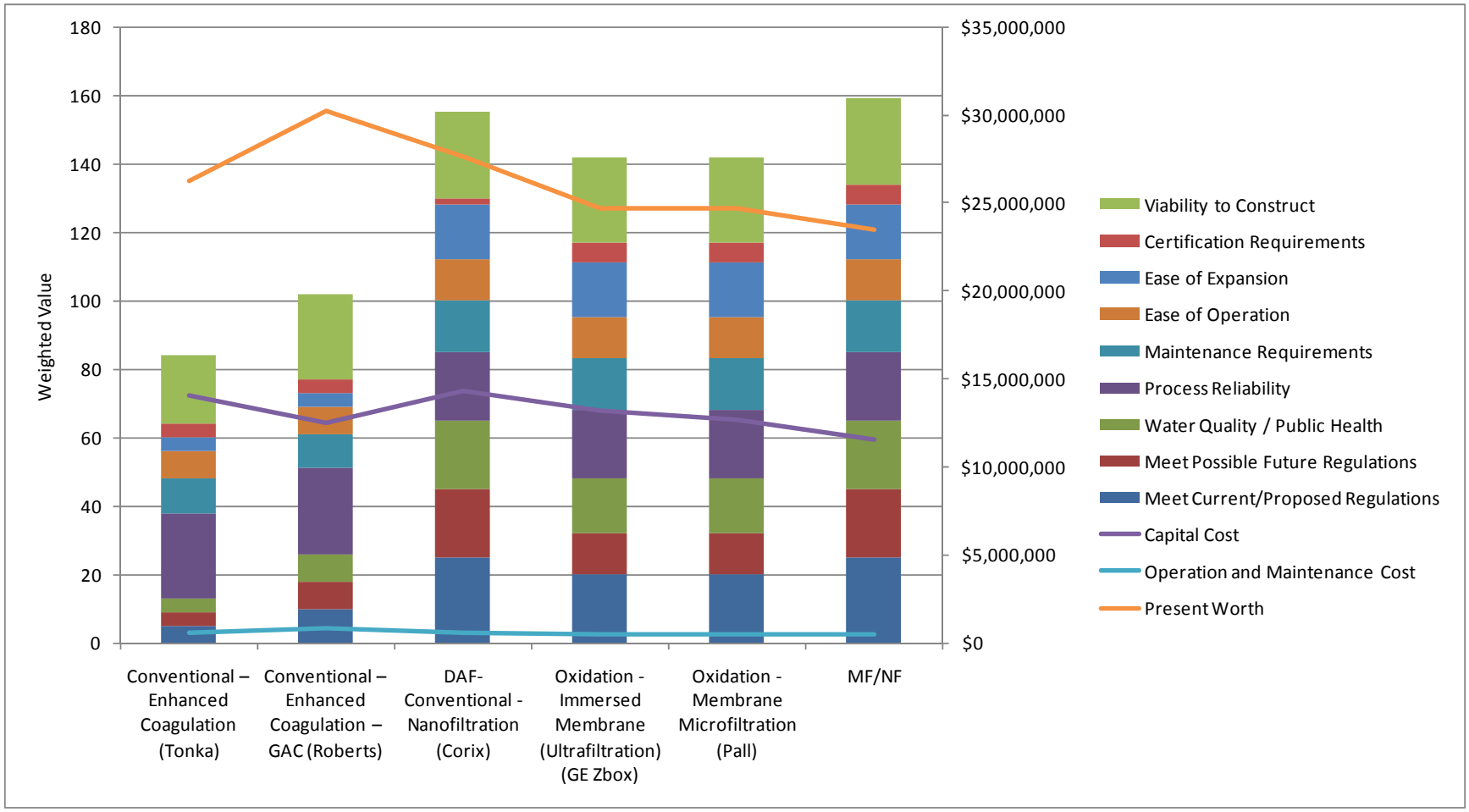

Figure 6-10: Alternative Treatment Process Scoring Matrix

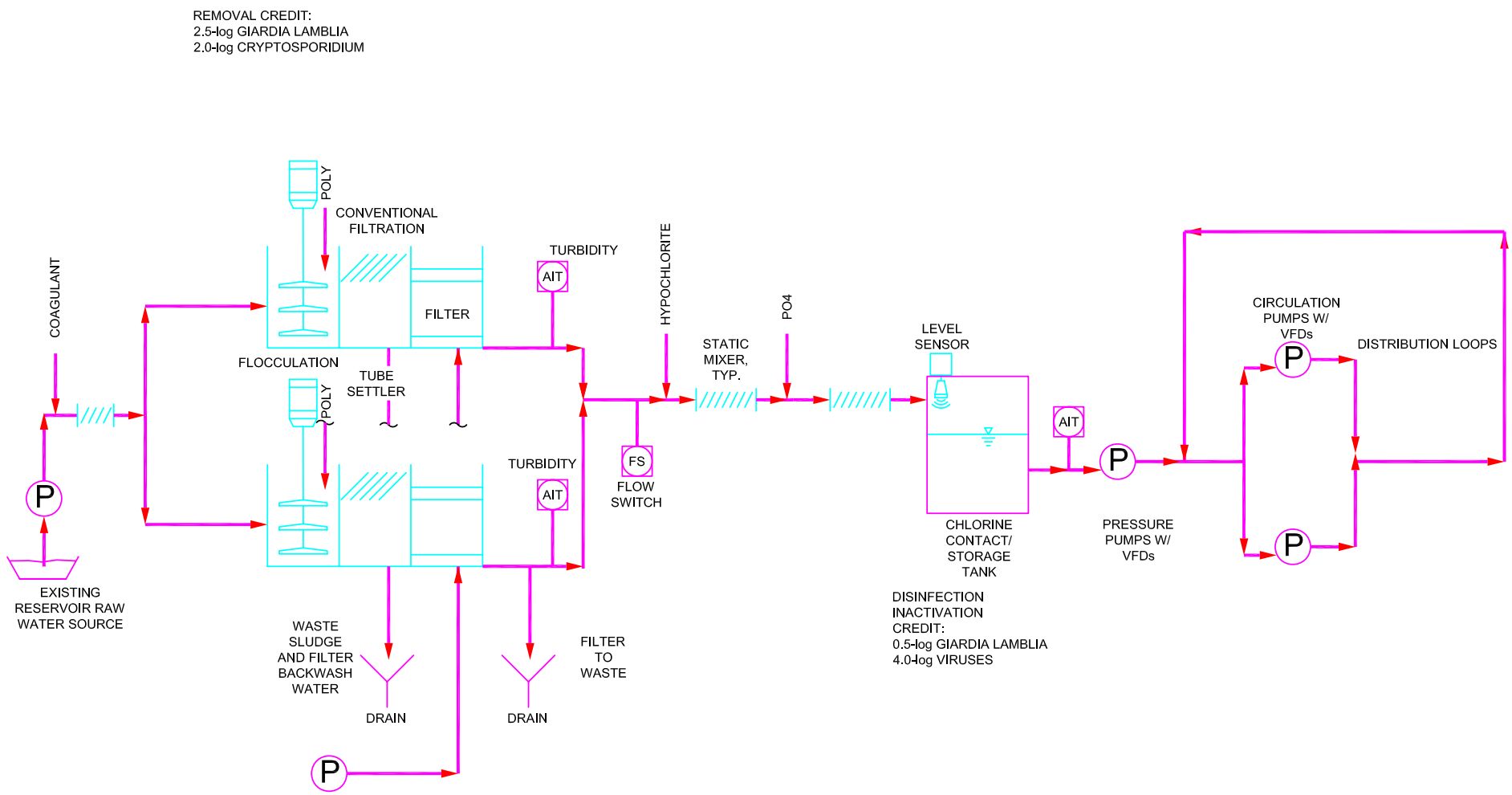

Figure 6-1
CONVENTIONAL FILTRATION SCHEMATIC

NOTE: SCHEMATIC DOES NOT SHOW ALL SYSTEMS DETAILS, VALVING, INSTRUMENTATION AND CONTROLS

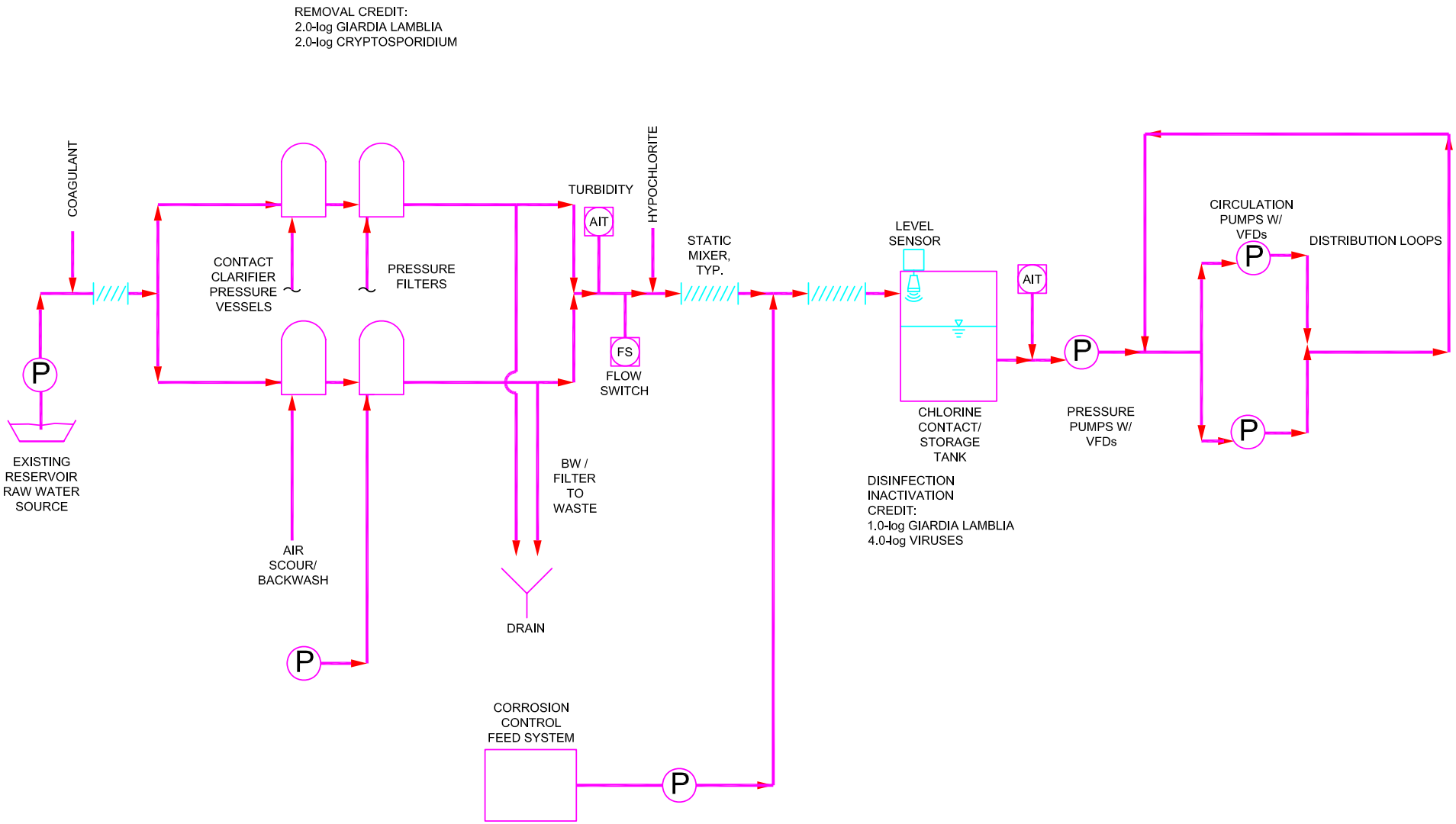

Figure 6-2
TWO STAGE DIRECT FILTRATION SCHEMATIC

NOTE: SCHEMATIC DOES NOT SHOW ALL SYSTEMS DETAILS, VALVING, INSTRUMENTATION AND CONTROLS

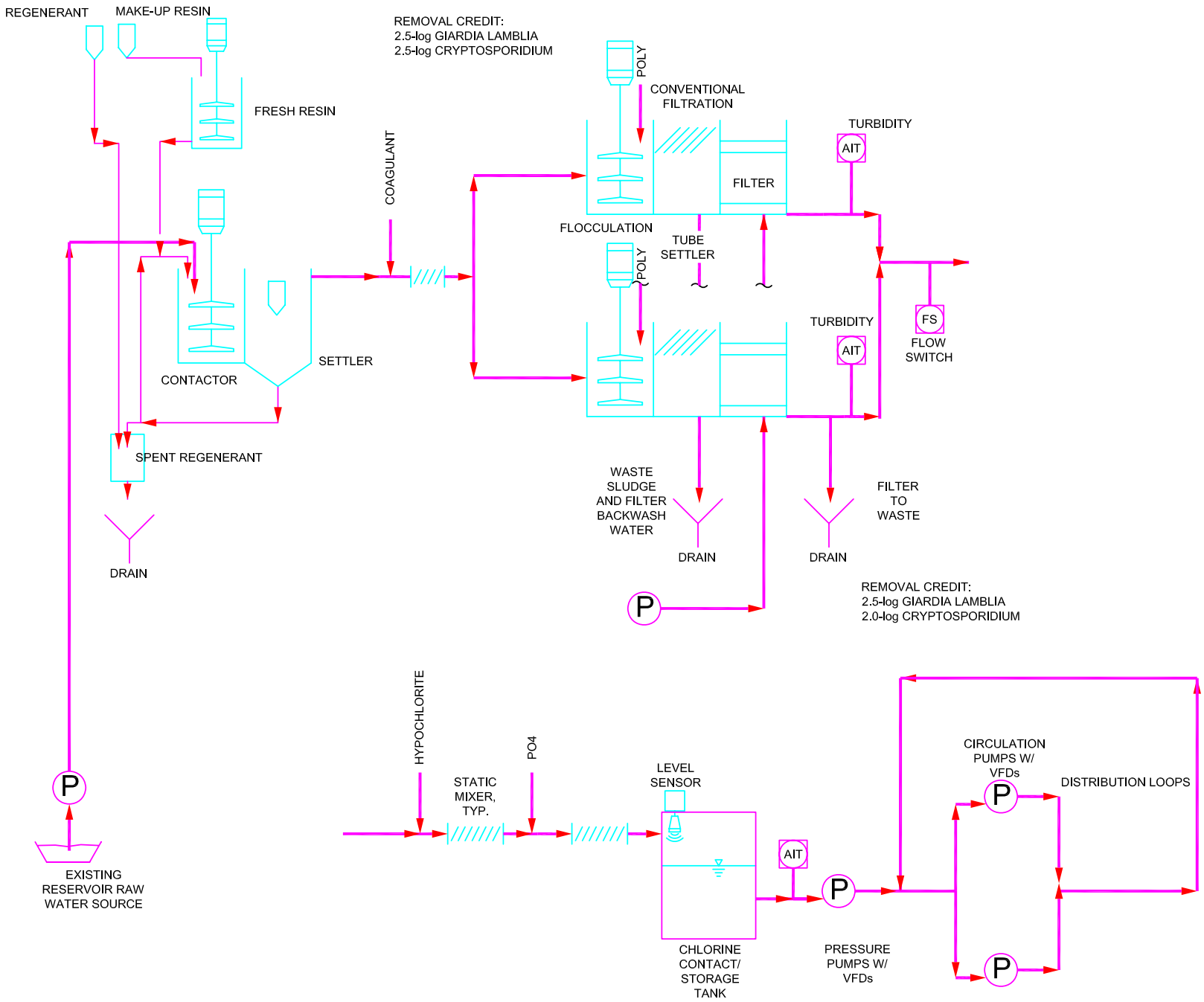

Figure 6-3
MIEX - CONVENTIONAL FILTRATION SCHEMATIC

NOTE: SCHEMATIC DOES NOT SHOW ALL SYSTEMS DETAILS, VALVING, INSTRUMENTATION AND CONTROLS

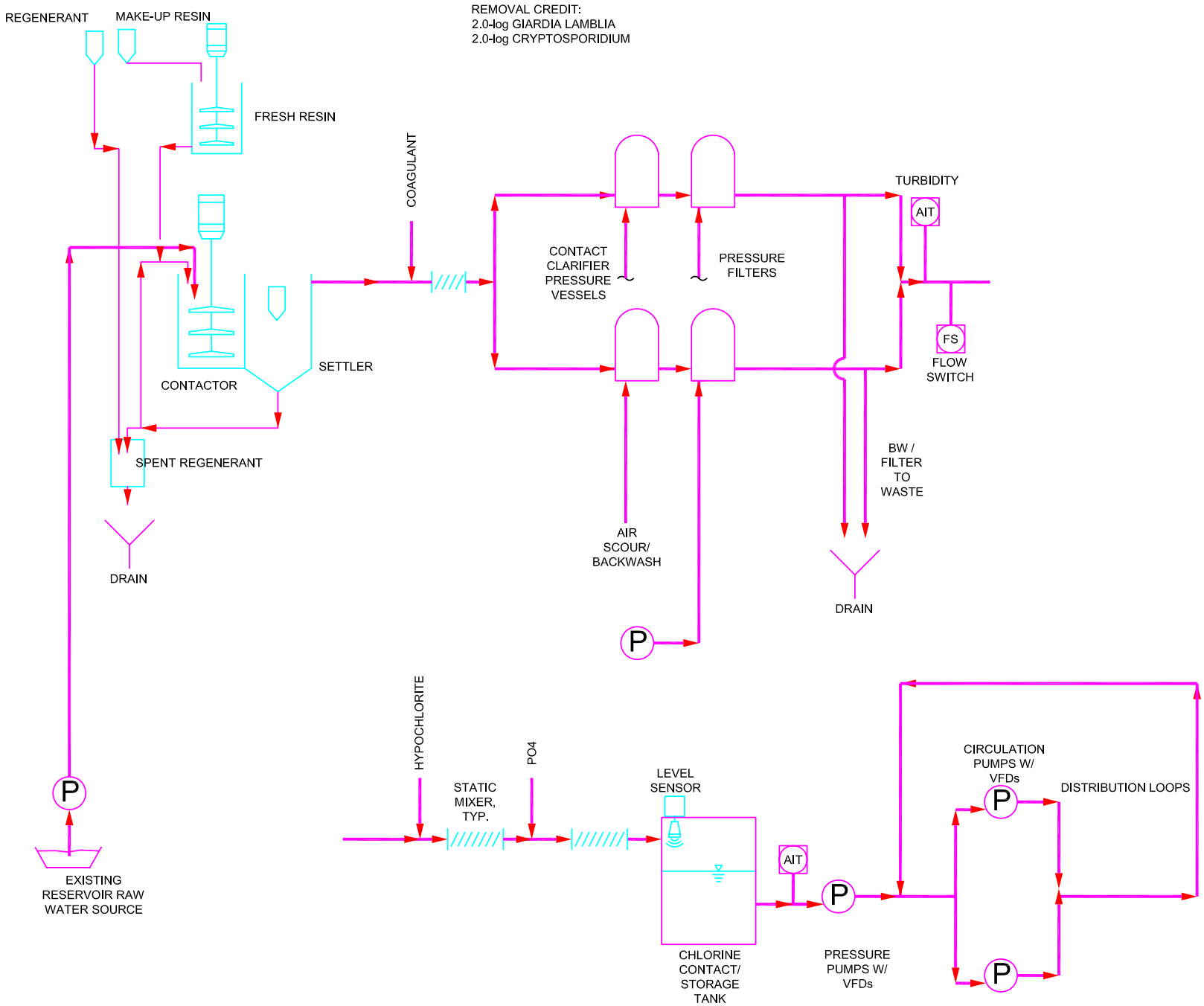

Figure 6-4
MIEX WITH TWO STAGE DIRECT FILTRATION SCHEMATIC

NOTE: SCHEMATIC DOES NOT SHOW ALL SYSTEMS DETAILS, VALVING, INSTRUMENTATION AND CONTROLS

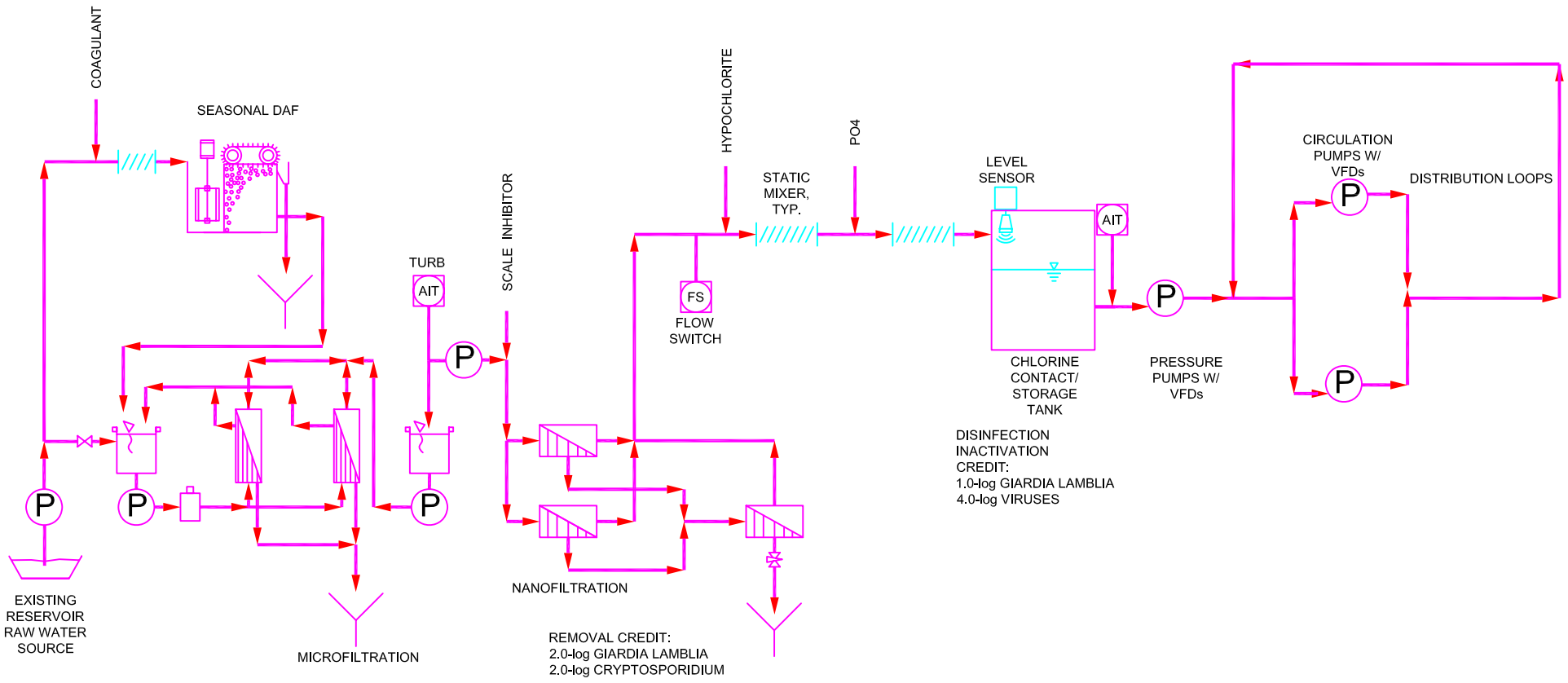

Figure 6-5
MICROFILTRATION-NANOFILTRATION SYSTEM SCHEMATIC

NOTE: SCHEMATIC DOES NOT SHOW ALL SYSTEMS DETAILS, VALVING, INSTRUMENTATION AND CONTROLS

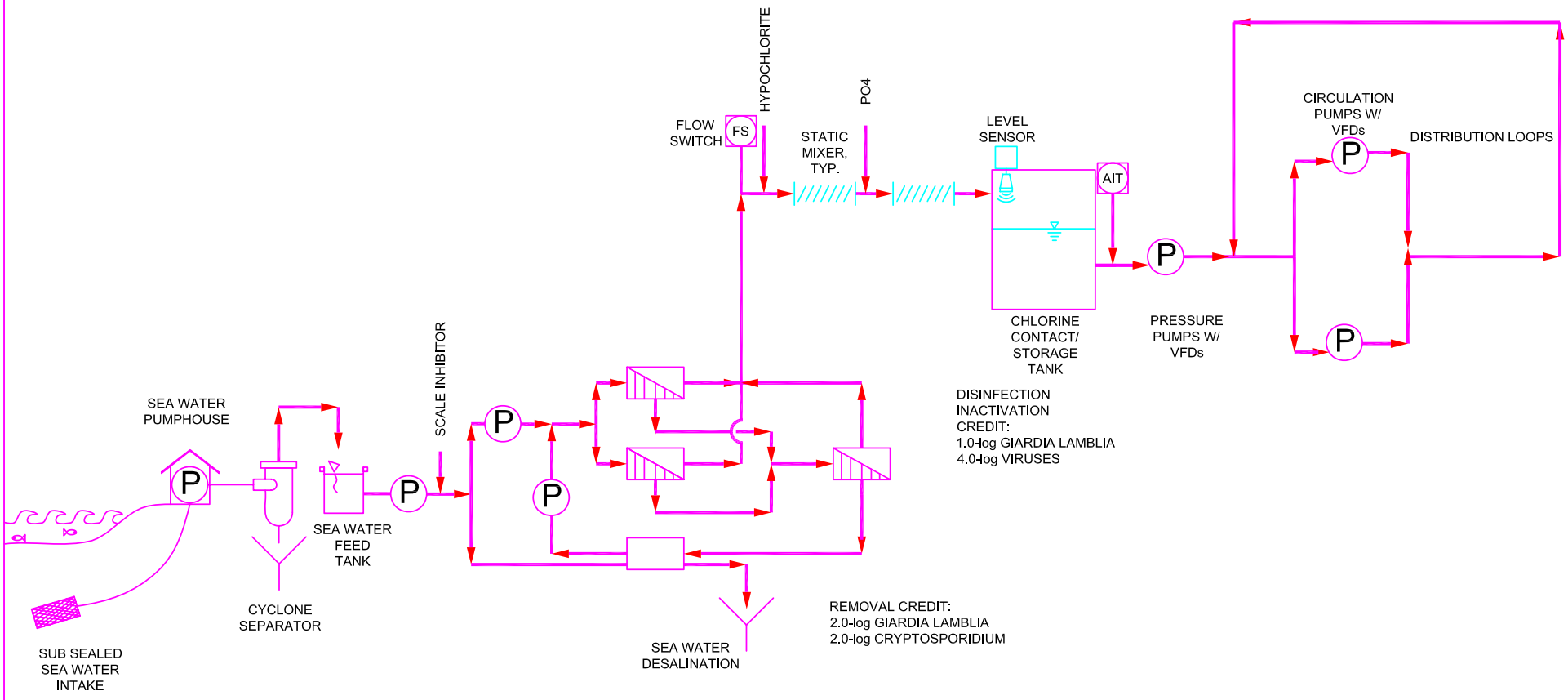

Figure 6-6
SEAWATER RO SYSTEM SCHEMATIC

NOTE: SCHEMATIC DOES NOT SHOW ALL SYSTEMS DETAILS, VALVING, INSTRUMENTATION AND CONTROLS

Section 7

Conclusions and Recommendations

7.0 Conclusions and Recommendations

The City of Kotzebue's water treatment plant was initially constructed in the early 1970s and has undergone several upgrades and expansions over the years but has exceeded its design life and capacity and is in need of replacement. The condition of the plant is such that plant replacement is more cost effective than continued partial upgrades or repairs. More importantly, in spite of the efforts of the operations staff, the treatment process is not in compliance with the revised drinking water standards for disinfection by-products. Past engineering evaluations have identified varying levels of structural problems, concluding that total building replacement would be a more cost-effective solution than continued upgrades and repairs.

The existing treatment process consists of two parallel, conventional water-treatment-package units capable of a total rated production of 300 gpm. In order to meet the current water demand, the water plants must be operated and maintained for continuous operation (24 hours per day), requiring three operating shifts. A large number of different chemicals are being used to remove turbidity and color, but this treatment has been unable to consistently remove naturally occurring organic material which, when combined with chlorine, forms disinfection by-products. As such, the existing plant and process have been in non-compliance with current health-based federal and state drinking water regulations and does not meet the future needs of the city.

Based on an evaluation of the existing source water quality and regulatory requirements, five treatment process alternatives were developed which could reasonably be expected to provide sufficient quantities of drinking water for current and future (30-year) demands while complying with drinking water quality standards. A sixth alternative consisting of rehabilitating the existing water treatment plant was also reviewed. Several different manufacturers which specialize in community water treatment equipment were contacted and provided planning-level equipment proposals and recommendations for treatment. Capital and operational costs for the alternatives were developed with information provided by equipment manufacturers and included with the construction of a new building to house the treatment plant and the other components used in the production of potable water. With the exception of the alternative to rehabilitate the existing water treatment system, the economic evaluation showed only minor differences in the overall present-worth analysis. The rehabilitation of the existing plant was more costly than replacement with a new treatment facility. As a means to select among the

remaining alternatives, a scoring matrix system was developed in order to rank-order them. The matrix addressed both monetary and non-monetary criteria. Based on the results of this alternative evaluation, a new water treatment plant using microfiltration/nanofiltration technology is recommended. The total capital cost of a new water treatment plant and treatment process is estimated to be $11.56 million. The annual operation and maintenance expenses of the water treatment plant are estimated to be $560,000.

It is recommended that the city proceed with grant application for the design and construction of a new water treatment plant for the community. Costs should be re-evaluated prior to final grant applications.

Section 8

Selected References

8.0 Selected References

1. Alaska Department of Environmental Conservation, Alaska Training/Technical Assistance Center/US Environmental Protection Agency, "Results of the Comprehensive Performance Evaluation of the Kotzebue Water Treatment Plant PWSID 340060, Kotzebue, Alaska," June 3, 2005.
2. Dorava, Joseph M., and Joshua M. Brekken, "Overview of Environmental and Hydrogeologic Conditions at Kotzebue, Alaska." U.S. Geological Survey Open-File Report 95-349. 1995.
3. http://en.wikipedia.org/wiki/Kotzebue,_Alaska. Accessed July 28, 2010.
4. http://www.commerce.state.ak.us/dca/commdb/CIS.cfm?Comm_Boro_name=Kotzebue. Accessed July 28, 2010.
5. http://www.manta.com/cs/mmd17yt/kikiktagruk-inupiat-corp. Accessed May 15, 2011.
6. Larson Consulting Group, "Report on Electrical & Mechanical Inspection & Upgrades for Water Treatment Plant and Raw Water Pumphouses," October 2006.
7. Larson Consulting Group, "Sanitation Utilities Development Plan, Kotzebue, Alaska," October 2005.
8. Larson Consulting Group, "Water and Sewer Utilities Improvements, Kotzebue, Alaska – Preliminary Engineering Report," February 2008.
9. Purification Technology, Inc.," Pilot Studies Report—November 1 to December 16, 2005, and July 10 to July 31, 2006."
10. US Department of Agriculture, Rural Utilities Service, "Bulletin 1780-2 Preliminary Engineering Report—Water Facilities," September 10, 2003.

Section 9

Appendix

9.0 Appendix

Appendix A Community Information

- Community Profile
- Photographs
- Flood Hazard Report
  - Permits and Approvals
  - Drinking Water Monitoring Compliance
- Operator Certification
- Water Quality Data
- Water Rights

Appendix B Trip Reports and Memorandum

Appendix C Cost Estimates

- Capital Cost Estimates
- Operation and Maintenance Cost Estimates

Appendix D Calculations

Appendix E Manufacturers' Proposals

Appendix F 2005-2006 Water Treatment Pilot Study Report

Appendix G 2005 Water Treatment Plant Structural Evaluation

Appendix H Water and Sewer Enterprise Financial Reports 2008-2010

APPENDIX A

COMMUNITY INFORMATION

COMMUNITY PROFILE

Kotzebue

Community Overview

Current Population:	3,154 (2009 DCCED Certified Population)
Pronunciation/Other Names:	(KAWT-zuh-byoo)
Incorporation Type:	2nd Class City
Borough Located In:	Northwest Arctic Borough
School District:	Northwest Arctic Schools
Regional Native Corporation:	NANA Regional Corporation

Location:

Kotzebue is on the Baldwin Peninsula in Kotzebue Sound, on a 3-mile long spit, which ranges in width from 1,100 to 3,600 feet. It is located near the discharges of the Kobuk, Noatak, and Ssezawick Rivers, 549 air miles northwest of Anchorage and 26 miles above the Arctic Circle. It lies at approximately 66.898280 North Latitude and -162.595850 West Longitude. (Sec. 03, T017N, R018W, Kateel River Meridian.) Kotzebue is located in the Kotzebue Recording District. The area encompasses 27.0 sq. miles of land and 1.7 sq. miles of water. Kotzebue is located in the transitional climate zone, which is characterized by long, cold winters and cool summers. The average low temperature during January is -12 °F; the average high during July is 58 °F. Temperature extremes have been measured from -52 to 85 °F. Annual snowfall averages 40 inches, with total precipitation of 9 inches per year. Kotzebue Sound is ice-free from early July until early October.

History:

This site has been occupied by Inupiat Eskimos for at least 600 years. "Kikiktagruk" was the hub of ancient Arctic trading routes long before European contact, due to its coastal location near a number of rivers. The German Lt. Otto Von Kotzebue "discovered" Kotzebue Sound in 1818 for Russia. The community was named after the Kotzebue Sound in 1899 when a post office was established. Since the turn of the century, expansion of economic activities and services in the area have enabled Kotzebue to develop relatively rapidly. The city was formed in 1958. An air force base and White Alice Communications System were later constructed.

Culture:

The residents of Kotzebue are primarily Inupiat Eskimos, and subsistence activities are an integral part of the lifestyle. Each summer, the North Tent City fish camp is set up to dry and smoke the season's catch. In 2009, Kotzebue became a "wet" community, allowing the sale of alcohol at the city-own liquor store.

Economy:

Kotzebue is the service and transportation center for all villages in the northwest region. It has a healthy cash economy, a growing private sector, and a stable public sector. Due to its location at the confluence of three river drainages, Kotzebue is the transfer point between ocean and inland shipping. It is also the air transport center for the region. Activities related to oil

Age 4 and under:	336
Age 5 - 9:	358
Age 10 - 14:	359
Age 15 - 19:	267
Age 20 - 24:	170
Age 25 - 34:	467
Age 35 - 44:	469
Age 45 - 54:	369
Age 55 - 59:	96
Age 60 - 64:	64
Age 65 - 74:	90
Age 75 - 84:	24
Age 85 and over:	13
Median Age:	25.9
Pop. Age 18 and over:	1,855
Pop. Age 21 and over:	1,729
Pop. Age 62 and over:	158

Census Population History:

1880:	0
1890:	0
1900:	200
1910:	193
1920:	230
1930:	291
1940:	372
1950:	623
1960:	1,290
1970:	1,696
1980:	2,054
1990:	2,751
2000:	3,082
Comments:	

Housing Characteristics:

Total Housing Units:	**1,007**
Occupied Housing (Households):	889
Vacant Housing:	118
Vacant Due to Seasonal Use:	47

Owner-Occupied

Housing:	388
Median Value Owned Homes:	$116,700
Renter-Occupied Housing:	501
Median Rent Paid:	$982
Total Households:	889
Avg. Household Size:	3.40
Family Households:	657
Avg. Family Household Size:	3.93
Non-Family Households:	232
Pop. Living in Households:	3,020
Pop. Living in Group Quarters:	62

The following Census figures are estimates, based on a sample.
The percent of all households sampled in Kotzebue during the 2000 Census was **46.9%**.

Housing Structure Types:

Single Family (Detached):	545
Single Family Attached:	40
Duplex:	72
3 or 4 Units:	128
5 to 9 Units:	86
10 to 19 Units:	30
20 plus Units:	67
Trailers/Mobile Homes:	38
Boats/Other Types:	0

Plumbing/Kitchen/Phones/Heating:

Total Households:	**889**
Percent of Households That	
Lack Complete Plumbing (lack sink, bath/shower or flush toilet):	6.6%
Lack a Complete Kitchen (lack stove, fridge or running water):	6.8%
Lack Phone Service:	5.9%
Heat Using Electricity:	3.2%
Heat Using Fuel Oil, Kerosene:	87.9%
Heat Using Wood:	3.3%
Heat Using Piped Gas (utility):	0.2%
Heat Using Bottled, Tank, LP	2.9%

Gas:	
Heat Using Coal or Coke:	0.2%
Heat Using Solar Energy:	0.0%
Heat Using Other Fuel:	2.4%
Use No Fuel:	0.0%

Economy, Employment, Income and Poverty

General Description of the Local Economy:

Kotzebue is the service and transportation center for all villages in the northwest region. It has a healthy cash economy, a growing private sector, and a stable public sector. Due to its location at the confluence of three river drainages, Kotzebue is the transfer point between ocean and inland shipping. It is also the air transport center for the region. Activities related to oil and minerals exploration and development have contributed to the economy. The majority of income is directly or indirectly related to government employment, such as the school district, Maniilaq Association, the city, and the borough. The Cominco Alaska Red Dog Mine is a significant regional employer. Commercial fishing for chum salmon provides some seasonal employment. In 2009, 115 residents held commercial fishing permits. Most residents rely on subsistence to supplement income.

The following Income and Employment data is from the **2000 U.S. Census**.
Additional detail is available from the Alaska Department of Labor and Workforce Development, Census and Geographic Information Network
and the U.S. Census Bureau's American FactFinder.

Income and Poverty Levels:

These figures are estimates based on a sample, and are subject to sampling variability. The percent of all households sampled in Kotzebue was **46.9%**.

Note: Current socio-economic measures could differ significantly.

Kotzebue is located in the **Northwest Arctic** Census Area.

Per Capita Income:	$18,289
Median Household Income:	$57,163
Median Family Income:	$58,068
Persons in Poverty:	401
Percent Below Poverty:	13.1%

Employment:

Total Potential Work Force (Age 16+):	1,985
Total Employment:	**1,255**
Civilian Employment:	1,252
Military Employment:	3
Civilian Unemployed (And Seeking Work):	136
Percent Unemployed:	9.8%
Adults Not in Labor Force (Not Seeking Work):	594
Percent of All 16+ Not Working (Unemployed + Not Seeking):	36.8%
Private Wage & Salary Workers:	720
Self-Employed Workers (in own not incorporated business):	56
Government Workers (City, Borough, State, Federal):	474
Unpaid Family Workers:	2

Employment by Occupation:

Management, Professional & Related:	492
Service:	244
Sales & Office:	292
Farming, Fishing & Forestry:	0
Construction, Extraction & Maintenance:	114
Production, Transportation & Material Moving:	110

Employment by Industry:

Agriculture, Forestry, Fishing & Hunting, Mining:	11
Construction:	55
Manufacturing:	5
Wholesale Trade:	4
Retail Trade:	100
Transportation, Warehousing & Utilities:	158
Information:	37
Finance, Insurance, Real Estate, Rental & Leasing:	61
Professional, Scientific, Management, Administrative & Waste Mgmt:	34
Education, Health & Social Services:	483
Arts, Entertainment, Recreation, Accommodation & Food Services:	55
Other Services (Except Public Admin):	114
Public Administration:	135

Facilities, Utilities and Services

General Description of Local Facilities

Water is supplied by the 150-million-gallon Vortac Reservoir, located one and a half miles from the city. Water is treated and stored in a 1.5-million-gallon tank. Water is heated with a waste heat recovery system at the electric plant and distributed in circulating mains. Piped sewage is treated in a 32-acre zero discharge facultative lagoon west of the airport. Around 80% of homes are fully plumbed, and 521 homes are served by the city system. A transfer station and Class 2 permitted landfill with balefill is available. Recycling and hazardous waste disposal are provided. Kotzebue uses ten 50-kilowatt wind turbines to supplement electricity.

Water Distribution, Source & Treatment Systems:

Water System Operator:	**City**
Washeteria Operator:	Private
Piped Water System:	Yes
Central Watering Point (Haul):	No
Multiple Watering Points:	No
Water Truck (Delivery):	No
Individual Wells:	No
Community Well Source:	No
Surface Water Source:	Yes
DEC Water Permit Number:	340060
Water Is Filtered:	Yes

Water Is Chlorinated:	Yes

Sewage Collection Systems:

Sewer System Operator:	**City**
Piped Sewer System:	Yes
Honeybucket Haul:	No
Honeybucket Pits:	Yes
Individual Septic Tanks:	No
Community Septic Tank:	No
Sewage Pumper:	No
Sewage Lagoon:	Yes
Sewage Lift Station:	Yes
Outhouses:	No

Refuse/Landfill System:

Refuse Collector:	**City**
Landfill Operator:	City
DEC Landfill Permit:	Yes
Type of Landfill:	Class 2, 0332-BA001

Electric Utility:

Electric Utility Name:	**Kotzebue Electric Association**
Utility Operator:	REA Co-op
Power Source:	Diesel; Wind; Natural Gas
FY 2009 Rate:	46.4 (Only data for PCE Communities is available on this system)
Power Cost Equalization (PCE) Subsidy:	Yes
FY 2009 Total kWh Generated:	22,017,338 kWh
FY 2009 Power Cost Equalization (PCE) Rate:	30.37 cents/kWh (For consumption up to 500 kWh monthly)
FY 2009 Average Effective Residential Rate:	16.07 cents/kWh
	Link to the most current PCE Report: www.akenergyauthority.org

Bulk Fuel:

Tank Owners
(Number of tanks / Total capacity): Crowley Marine Services Tank Farm (6,200,000 gals.); Airport/Bering Air (20,000); Air Nat'l Guard (17,000); Pacific Alaska Fuel Services; Bison Street; K.I.C.; NAPA Auto Parts

Health Care:

Clinic/Hospital in Community:	**Maniilaq Medical Health Center and Kotzebure PHN**
Clinic/Hospital Phone Number:	907-442-3321
Operator:	Maniilaq Association (907-402-3311) www.maniilaq.org
Owner:	U.S. Public Health Service

Facility Status:	
Alternate Health Care:	Kotzebue Volunteer Fire Dept. (907-442-3404/3351); Maniilaq Air Ambulance (907-442-3321)
Health Comments:	The hospital is a qualified Acute Care facility. Long Term Care: Kotzebue Senior Center. Specialized Care: Lake Street House (Maniilaq lodging); Maniilaq Alcohol Program; Maniilaq Camp. Emergency Services have limited highway, coastal and airport access. Emergency service is provided by 911 Telephone Service and volunteers.

Visitor Accomodations/Information:

Airline Services:	Alaska Air, Baker Aviation, Bering Air, Cape Smythe Air Service, Grant Aviation, Hageland Aviation, Northwest (codeshare), Servant Air, Tanana Air Service
Taxis:	B&D Taxi, The Other Cab Company; City Cab Company
Car Rentals:	
Accomodations:	Nullagvik Hotel & Restaurant; Bayside Inn & Restaurant; Lagoon B&B; Sue's B&B
Visitor Attractions:	Visitor Information Center; NANA Museums; Senior Cultural Center
Cultural Events:	Archie Ferguson/Willie Goodwin Sr. Memorial Snowmachine Race (April); Arctic Circle Sled Dog Race; Kobuk 440 Sled Dog Race; 8 Dog Sled-Dog Championship; Fourth of July celebration

Local Services & Facilities:

Police:	City PD (442-3351); Troopers Post (442-3222)
Fire/Rescue:	Kotzebue Volunteer Fire Dept. (442-3404/3351); Maniilaq Air Ambulance (442-3321), NANA Search & Rescue; City Fire Training Center
Court/Magistrate:	State Superior Court; State Magistrate
Youth Center:	Boys & Girls Club
Community Hall:	City Hall; City Entertainment Center
Senior Services:	Senior Cultural Center/Maniilaq; Senior Transit; Residential Facility
Gym or Pool:	High School Gym
Bingo:	City; Lions Club; Dog Mushers Assoc.
Movie Theater:	
Museum:	NANA Museum
Library:	University/Borough Public Library & School Library

Communications:

In-State Phone:	OTZ Telephone Co-op, Inc.
Long-Distance Phone:	AT&T Alascom; GCI; OTZ Telephone
Internet Service Provider:	ACS Internet (www.acsalaska.net); GCI (www.gci.net); OTZ Telephone Cooperative, Inc. (www.otz.net)
TV Stations:	ARCS; KUAC; KYAC
Radio Stations:	KOTZ-AM
Cable Provider:	GCI Cable, Inc.
Teleconferencing:	Alaska Teleconferencing Network; Legislative Information Office

School District and Schools

Contact information for Alaska School Districts and Schools is available at the Department of Education and Early Development's Website

School District

District Name:	**Northwest Arctic Schools**
Operated By:	Borough
Total Number of Schools:	12
Total Number of Teachers:	173
Total Number of Students:	1,984
Student/Teacher Ratio:	11.5
Dropout Rate (9-12 Grade):	11.6%
Percent Native Students:	95.0%
Geographic Cost Differential (FY 2009):	1.720
Expenditures Per ADM (FY 2008):	$20,893

Schools Located in Kotzebue

School Name	Grades Taught	Number of Students	Number of Teachers
June Nelson Elementary School	P thru 5	398	22
Kotzebue Middle/High School	6 thru 12	343	30

Municipal Officials and Employees

General Municipal Information:

Year of Incorporation:	1958
Manager or "Strong Mayor" Form of Government:	Manager
Regular Election Held:	1st Tuesday in October
Assembly/Council Meets:	1st & 3rd Thursdays
Sales Tax:	6% (City)
Property Tax:	None
Special Taxes:	6% Bed Tax (City); 6% Alcohol Tax (City); 6% Gaming Tax (City)

Municipal Contact Information:

Address:	**City of Kotzebue**
	P.O. Box 46
	Kotzebue, AK 99752
Phone:	907-442-3401
Fax:	907-442-3742
E-mail:	lgreene@kotzebue.org
Web Page:	http://kotzpdweb.tripod.com/city/index.html

Elected/Appointed Officials:

Mayor (term as mayor ends):	**The Honorable Eugene Smith** (2012)
City Council (term ends):	
	Ernest Norton, Vice Mayor (2011)
	Jason Avery (2011)
	Clement Richards, Sr. (2011)
	Eugene Smith, Mayor (2012)
	Matt Takker (2012)

Nathan Kotch, Jr. (2010)

Leo Greene (2010)

Advisory School Board (term ends):

Jade Hill

Cindy Fields

Cheryl Edenshaw

Erik Swisher

David Miller

Marge Ubben

John Rae

Planning Commission (term ends):

Cindy Fields

Charles (Sandy) Huss

Susan Jones

Jade Hill

Matt Bergan

Alvin Werneke, Jr.

Eva Wicken-Hunt

Municipal Employees:

Position:	**Employee Name:**
Attorney	Joseph Evans
City Clerk	Linda Greene
Fire Chief	Steve Troxell
Manager	Rich Walker
Police Chief	John Ward
Public Works Director	Jeffery Hadley
Capital Projects Manager	Derek Martin

Local Contacts and Regional/State Organizations with Local Offices

Alaska Legal Services Corp. (Kotzebue Office)

P.O. Box 526

Kotzebue, AK 99752-0526

Phone: 907-442-3500

Fax: 907-442-4111

E-Mail: alsckotz@yahoo.com

(Other)

Arctic Sounder, Kotzebue

301 Calista Court, STE B

Anchorage, AK 99518

Randall Howell, Managing Editor

Phone: 907-272-9830

Fax: 907-272-9512

E-Mail: rhowell@alaskanewspapers.com

Web: http://www.alaskanewspapers.com

(Media; Weekly news for Northwest Arctic, North Slope area)

City of Kotzebue

P.O. Box 46

Kotzebue, AK 99752

Eugene Smith, Mayor

Phone: 907-442-3401

Fax: 907-442-3742

E-Mail: lgreene@kotzebue.org

Web: http://kotzpdweb.tripod.com/city/index.html

(City)

Kikiktagruk Inupiat Corporation

P.O. Box 1050, 373A Second Avenue

Kotzebue, AK 99752

Tim Schuerch, CEO

Phone: 907-442-3165

Fax: 907-442-2165

(Village Corporation)

Kotzebue Electric Association

P.O. Box 44

Kotzebue, AK 99752

Denise Norton

Phone: 907-442-3491

Fax: 907-442-2482

E-Mail: info@kea.coop

Web: http://www.kea.coop/

(Electric Utility)

Maniilaq Association

P.O. Box 43

Kotzebue, AK 99752

Ian Erlich, President & CEO

Phone: 800-442-7161

Fax: 907-442-7678

E-Mail: ierlich@maniilaq.org

Web: http://www.maniilaq.org

(Regional Health Corporation; Non-Profit for NANA Regional Corp. Also Public Law 93-638 tribal gov't contractor.)

NANA Regional Corporation

P.O. Box 49

Kotzebue, AK 99752

Marie Greene, President & CEO

Phone: 907-442-3301

Fax: 907-442-2866

E-Mail: info@nana.com

Web: http://www.nana.com

(Regional Native Corporation; Also represents merged corporations of: Ambler, Buckland, Deering, Kiana, Kivalina, Kobuk, Noatak, Noorvik, Selawik, Shungnak. Also P.O. Box 49, Kotzebue, AK, 99752, phone 442-3301; fax 442-2866)

Native Village of Kotzebue

P.O. Box 296

Kotzebue, AK 99752-0296

Guy Adams, Executive Director

Phone: 907-442-3467

Fax: 907-442-2162

E-Mail: info@kotzebueira.org

Web: http://www.kotzebueira.org

(Village Council; BIA-Recognized IRA Council. Also a Public Law 93-638 tribal gov't contractor.)

Northwest Arctic Borough Economic Development Commission

P.O. Box 1110

Kotzebue, AK 99752

Jade Hill, Program Director

Phone: 907-442-2500

Fax: 907-442-3740

E-Mail: jhill@nwabor.org

Web: http://www.nwabor.org

(Regional Development; ARDOR for Northwest Arctic Borough)

Northwest Inupiat Housing Authority

P.O. Box 331

Kotzebue, AK 99752

Guy Adams, Executive Director

Phone: 907-442-3450

Fax: 907-442-3486

E-Mail: gadams@nwiha.com

Web: http://maniilaq.org

(Housing Authority)

Tupiq Services

P.O. Box 296

Kotzebue, AK 99752

Walter Porter, Executive Director

Phone: 907-442-3378

Fax: 907-442-3538

(Housing Authority)

Municipal Finances

NOTE: The following data is derived from certified financial statements and financial audits submitted annually by municipalities in conjunction with state revenue sharing programs. Depreciation and internal service funds such as trust accounts are not included in these figures.

Commerce has compiled this information since 1985. Contact the Research and Analysis Section **if you want Municipal Finance data for earlier years.**

The Municipal Financial database will no longer be updated beyond 2008.

2005 Municipal Revenues:

Local Operating Revenues		**Outside Operating Revenues**	
Taxes:	$2,672,169	Federal Operating:	$70,464
License/Permits:	$21,099	State Rev. Sharing:	$0
Service Charges:	$1,073,679	State Safe Communities:	$0
Net Bingo:	$74,554	State Fish Tax Sharing:	$0
Enterprise:	$2,477,251	Other State Revenue:	$83,023
Other Local Revenue:	$67,534	Other Intergov't:	$0
Total Local Oper Revenues:	**$6,386,286**	Total Outside Oper Rev (no Educ):	$153,487
		State/Fed Educ Funds:	$0
		Total Outside Revenues:	**$153,487**
TOTAL OPERATING REVENUES:	**$6,539,773**	**Operating Rev Per Capita:**	**$ 2,096**
STATE/FED CAPITAL PROJECT REVENUES:	**$343,624**		
TOTAL ALL REVENUES:	**$6,883,397**		

2005 Municipal Expenditures:

General Government Expenditures		**Public Services**	
Council/Assembly:	$118,042	Roads:	$0
Admin/Finance:	$890,393	Ice Roads:	$0
Planning/Zoning:	$0	Airport:	$0
Other Gov't:	$0	Harbor/Dock:	$0
		Mass Transit:	$0
Total Gen. Gov't:	**$1,008,435**	Refuse/Landfill:	$672,099
		Electric Utility:	$0
Public Safety		Phone Utility:	$0
Police:	$752,878	Water/Sewer:	$1,652,618
Fire:	$439,390	Other Public Works:	$1,112,737
Ambulance:	$0	Clinic/Hospital:	$0
Other Pub. Safety:	$614,493	Library/Museum:	$0
		Parks & Rec:	$57,655
Total Pub. Safety:	**$1,806,761**	Misc. Public Services:	$124,540
		Total Pub. Svcs. (no Educ.):	$3,619,649
		Education Exp:	$0

		Total Public Services:	**$3,619,649**
		Debt Retirement:	**$70,811**
TOTAL OPERATING EXPENDITURES:	**$6,505,656**	**Operating Exp Per Capita:**	**$ 2,085**
CAPITAL PROJECT EXPENDITURES:			**$512,094**
TOTAL ALL EXPENDITURES:			**$7,017,750**

Enterprise Fund Detail:

Enterprise Revenues		**Enterprise Expenditures**	
Water/Sewer:	$1,760,306	Water/Sewer:	$1,652,618
Water:	$0	Water:	$0
Sewer:	$0	Sewer:	$0
Washeteria:	$0	Washeteria:	$0
Refuse:	$716,945	Refuse/Landfill:	$672,099
Electric:	$0	Electric:	$0
State PCE Subsidy:	$0	(Power Cost Equalization)	
Cable:	$0	Cable:	$0
Fuel:	$0	Fuel:	$0
Gravel:	$0	Gravel:	$0
Misc. Enterprises:	$0	Misc. Enterprises:	$0
Total Enterprise Revenues:	**$2,477,251**	**Total Enterprise Expenditures:**	**$2,324,717**

PHOTOGRAPHS

6/29/2010
Pic 003.jpg

6/29/2010
Pic 005.jpg

6/29/2010
Pic 013.jpg

6/29/2010
Pic 051.jpg

6/29/2010
Pic 056.jpg

6/29/2010
Pic 066.jpg

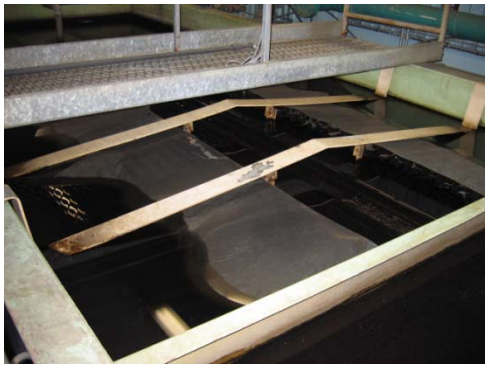

6/29/2010
Pic 067.jpg

6/29/2010
Pic 069.jpg

6/29/2010
Pic 070.jpg

6/29/2010
Pic 073.jpg

6/29/2010
Pic 074.jpg

6/29/2010
Pic 075.jpg

6/29/2010
Pic 076.jpg

6/29/2010
Pic 078.jpg

6/29/2010
Pic 081.jpg

6/29/2010
Pic 082.jpg

6/29/2010
Pic 084.jpg

6/29/2010
Pic 085.jpg

6/29/2010
Pic 086.jpg

6/29/2010
Pic 089.jpg

6/29/2010
Pic 095.jpg

6/29/2010
Pic 096.jpg

6/29/2010
Pic 102.jpg

6/29/2010
Pic 110.jpg

6/29/2010
Pic 133.jpg

6/29/2010
Pic 159.jpg

6/29/2010
Pic 179.jpg

6/29/2010
Pic 180.jpg

6/29/2010
Pic 181.jpg

6/29/2010
Pic 182.jpg

6/29/2010
Pic 186.jpg

6/29/2010
Pic 190.jpg

6/30/2010
Pic 210.jpg

FLOOD HAZARD REPORT

Kotzebue | City Office: (907) 442-3401 | Revised:

STATUS	2nd class city	LAST FLOOD EVENT	August 1990
POPULATION	2,932	FLOOD CAUSE	coastal
BUILDINGS		ELEVATION	
RIVER SYSTEM	none	FLOOD OF RECORD	
COASTAL AREA	Kotzebue Sound	FLOOD CAUSE	
		ELEVATION	
NFIP STATUS	participating	WORST FLOOD EVENT	
FLOODPLAIN REPORT		FLOOD CAUSE	
FLOOD INSURANCE STUDY	yes	FLOOD GAUGE	no

Comments: The August 1990 coastal storm likely represents the 100-year event. It was reported that floodwaters did not reach the first floor of any major building. There were no reports of buildings flooded during the September, 1986 coastal storm. Published Flood Insurance Rate Maps (FIRM) show detailed flood information. FIRM can be purchased from Federal Emergency Management Agency (FEMA) at

FEMA Maps
Flood Map Distribution Center
6730 (A–G) Santa Barbara Court
Baltimore, MD 21227-5623
Toll free: 800-358-9616

Floodplain Manager (907) 753-2610

PERMITS AND APPROVALS

DRINKING WATER MONITORING COMPLIANCE

Monitoring Summary for **KOTZEBUE MUN. WATER SYSTEM**

Public Water System ID# **AK2340060** **Population:** **3,290** (Surface water) **March 10, 2011**

Required Water Test and Location	Required Sampling Frequency	Current Sampling Status	
		Last Sample Date	Next Sample Date
Total Coliform Bacteria (Distribution System)	6 samples Monthly	February 2011	Monthly
Lead And Copper (Distribution System)	10 samples Annually	February 2010	Between June and September 2011
Combined TTHM & HAA5 (Stage 1) (End of Distribution)	1 sample Quarterly	February 2011	Quarterly
TOC & Alkalinity - Raw Water (Entry Point)	1 sample Monthly	February 2011	Monthly
Arsenic (Entry Point)	1 sample Annually	January 2011	2012
Asbestos (Distribution System)	Waiver	**NSF	
Total Organic Carbon (TOC) (Distribution Point)	1 sample Monthly	February 2011	Monthly
Old Inorganics (Entry Point)	1 sample Per Cycle	September 2008	Between 2011 and 2019
New Inorganics (Entry Point)	1 sample Per Cycle	September 2008	Between 2011 and 2019
Nitrate (Entry Point)	1 sample Annually	January 2011	2012
Pesticides & Other Organics SOC (Entry Point)	Renew Waiver, or 4 Quarterly samples during 2013	**NSF	Waiver Renewal for 2011 to 2013 due by 12/31/2012
Volatile Organic Compounds (VOCs) (Entry Point)	1 sample Annually	January 2011	2012
Consumer Confidence Report (CCR)	Request Data Dump	2009	Annually Before July 1st, 2011
Sanitary Survey	Every 3 years	11/25/2009	2012
Chlorine Residual (Distribution System)	1 Sample Per Month (Same Time and Location as Coliform Sample)	February 2011	6 samples ea. month, with t-coli bacti's
Gross Alpha & Radium 226/228 (Entry Point)	6 year period	2006	Between 2011 - 2013

Water Log

Distribution Chlorine (Distribution System)	6 samples ea. month, with t-coli bacti's	February 2011	Test and Record Daily. Send Reports to ADEC on the last day of the month (before the 10th day of the following month).
CARBON, TOTAL (TP001)	1 sample 1 day a month Raw and Treated TOC and Raw Alka		
Turbidity (After Filters)	6 samples daily when filtering water	January 2011	
Fluoride (Entry Point)	1 sample daily	January 2011	
Entry Point Chlorine (Entry Point)	4 samples daily, keep chlorine level above 0.2 mg/L	January 2011	

**NSF = No Sample Found

1) Periods are three years in length and started in 2002. The current period is 1/1/2011 - 12/31/2013 and the next period will be 1/1/2014 - 12/31/2016. Cycles are nine years in length and started in 2002. The current cycle is from 1/1/2011 - 12/31/2019. The next is 1/1/2020 - 12/31/2028.
2) Entry point - is the entry point to the distribution system. Distribution system - is the homes and building that receive water from a piped water system.
3) Water quality parameters are tested for in order to conduct a corrosion control study. Please contact your Engineer, Health Corporation, or Certified Laboratories for assistance.
4) Water systems with multiple water sources that do not combine before entering the distribution have to take one sample from each entry point to the distribution and may do a composite sample according to 18AAC80.325(17), 18AAC80.315(4).

5) Periods for radionuclides (Gross Alpha, Radium 226/228, and Uranium) are 3 or 6 years in length and started in 2008. The current periods are 1/1/2011 - 12/31/2013 and 1/1/2008 - 12/31/2013 respectively. Cycles for radionuclides are 9 years in length and started in 2008. The current cycle is 1/1/2008 - 12/31/2016.

Monitoring summaries reflect sampling information the Drinking Water Program receives from certified laboratories and public water systems. The accuracy cannot be guaranteed. If you notice any errors in this data, please contact your local ADEC Drinking Water Program Office. Public Water Systems are responsible for compliance with monitoring requirements.

Monitoring Summary completed by Ellen Williams, Environmental Specialist/ADEC. If you have questions please contact ADEC at (907) 451-2231 or 1-800-770-2137 E-Mail: ellen.williams@alaska.gov Fax: (907) 451-2188.

Sincerely,

Ellen Williams
Environmental Specialist

MEMORANDUM

State of Alaska

Department of Environmental Conservation
Division of Environmental Health

File Number: 410.07.001

TO: Vanessa Wike, P.E.
Statewide Engineering

DATE: December 5, 2007

FROM: Lee Johnson, P.E.
Northern Program

SUBJECT: Kotzebue CPE Follow Up Meeting

On September 24, 2007 Lee Johnson, Mike Jaynes, Ellen Williams, and Chris Clark met with the Kotzebue water plant staff in Kotzebue. The purpose of the meeting was to discuss the findings of the Comprehensive Performance Evaluation (CPE) conducted in May 2005 and discuss any progress they had made in addressing the performance limiting factors from the report. Utility staff participating in the meeting was Jeff Hadley, Public Works Director, Randy Walker, Water Plant Supervisor, and BJ (Burton Russell), Operator.

We discussed the past CPE and asked if they had utilized the CPE optimization software to develop trend lines for their treated water turbidity. They had not but were interested in trying the software. I requested they begin recording highest turbidity of the day when they do their daily turbidity summaries so that they can develop trends using the optimization software. They reported that due to their new standard operating procedures (SOP's) the finished water turbidity entering the storage tank is always less than or equal to 0.1 NTU. This would be a dramatic improvement in treated water turbidity. They agreed to enter the data from the previous 12 months into the spreadsheet and provided a copy of the spreadsheet to me on October 10, 2007. A discussion of the recent data compared to the data used for the CPE can be found at the end of this memo.

We then discussed the factors listed in the CPE report from May 2005. The factors and responses on how each were addressed are listed below.

1. POLICIES – Administration (A)

The CPE review team noted that clearly defined goals that emphasize continuous process optimization and the impacts on public health have not been clearly articulated and adopted by system managers and operators.

- Optimization goals not clearly understood by utility management with respect to public health protection.
    - Response - Jeff Hadley attended operator training so that he could understand water plant and treatment issues. He now has provisional Water Treatment and Water Distribution certifications.

- No written mission statement.
    - Response - Goal of public health protection is stated on CCR. Did not have a written mission statement but actions appear to be supportive. On November 9, 2007 they sent me a draft mission statement.

- Existing water quality goals not consistent between utility managers and staff.
    - Response - Updated SOP includes 0.1 NTU standard for returning filter to service after backwash. All utility staff are involved in data collection, maintenance of spreadsheets and data interpretation.

- Cost savings emphasized without mention of public health protection.
    - Response - Wasn't sure what our example referred to so Randy couldn't respond.

- Lack of communication of mission statement for consistent application by entire water treatment plant staff.
    - Response - Updated SOP includes 0.1 NTU standard for returning filter to service after backwash. All utility staff are involved in data collection, maintenance of spreadsheets and data interpretation.

2. APPLICATION OF CONCEPTS AND TESTING TO PROCESS CONTROL – Operation (A)

Activities noted during the CPE that were adversely affecting optimized performance are:

- Plant staff is not using their expertise in developing process control strategies.
    - Jar testing is not being performed to determine appropriate coagulant dosages for different raw water quality conditions;
        - Response - Jar testing is only conducted when they are having turbidity problems. Jar testing is usually triggered by changes in finished water quality rather than changes to raw water. However, numerous raw water quality parameters are sampled on a daily basis and based on experience they can anticipate events such as turnover based on raw water quality changes, i.e. temp and pH. Plant staff has an updated SOP for conducting jar tests.
    - Chemical dose calculations are seldom used by plant staff to develop strategies to respond to changes in raw water quality.
        - Response - Plant has updated SOPs for calculating chemical doses based on actual quantity of chemicals used. They have developed SOP for calculating alum dose incorporating specific gravity. Previous procedures relied on injection pump settings.
- Plant filter operation.
    - Filter to waste valves are available but are not used following filter backwash

        - Response - Plant has updated SOP for filtering to waste and returning filter to service only after filtered water turbidity is equal to or less than 0.1 NTU.
    - Filters are backwashed based on time in service rather than an optimized performance goal for turbidity or particle removal.
        - Response - Experience has shown that daily backwashes are needed. Filtered water turbidity is maintained at less than 0.1 NTU operating this way. When flow through plant is increased backwashes are done twice daily to maintain optimized turbidity goals.
    - Filters are placed back in service following backwash without consideration for effluent turbidity levels.
        - Response - Plant has SOP for not returning filter to service until filtered water turbidity is equal to or less than 0.1 NTU.

- Flocculation basin performance is controlled by visual observation rather than process control testing.
    - Response - No change.

- No filter profiling to determine filter media composition and quality.
    - Response - Filter #1 (old filter) was recently rebuilt. Filter #2 was inspected and sand was found, apparently deeper than the CPE team looked during the inspection.

- Not fully utilizing the SCADA system.
    - Response - They don't really have a full blown SCADA system. They have fixed some of the inoperable features of the control system they have. Apparently the system was not fully reviewed during the CPE. The system seemed capable of monitoring all the plant parameters they needed. The responses to information provided by the monitors are done manual by the operator though. It is more of a monitoring system than control system.

- Inability to record maximum turbidity spikes that occur during filter operation and following filter backwash events for plant optimization or regulatory compliance (i.e. improper scale on turbidity chart).
    - Response - Not exactly sure what this issue was. Turbidity circular chart recorders are currently limited to 1.0 NTU. They have installed a new HACH 1720E on the combined filter effluent. They could download data from the data logger feature of the interface to fulfill requirement to record turbidities above 1.0 NTU. This feature has not yet been utilized. Automatic filter to waste at 0.3 NTU and SOP for returning filter to service after backwash makes chance of exceeding the1.0 scale unlikely.

3. ALARM SYSTEMS – Design (B)

- Plant does not have adequate alarm and plant shutdown capability for critical finished water quality parameters.
    - Response - Plant has audible alarm and cell phone call out system for chlorine and turbidity. Cell phone is carried by operator in charge. Cancelling the alarm requires operator to manually shut it off at the plant.

- Turbidity set point of 0.5 NTU for automatic filter to waste exceeds regulatory performance standard of 0.3 NTU.
    - Response - This has been reprogrammed to 0.3 NTU. Changes to SOP for filter backwash limit turbidity to 0.1 NTU.

4. SEDIMENTATION – Design (B)

- The surface area of the available sedimentation basin is inadequate, resulting in solids loss and inability to meet optimized performance criteria of <1 NTU for this process.
    - No changes to sedimentation basin. In November 2005 and July 2006 pilot studies were conducted at the plant to compare conventional filtration with tube settlers to conventional filtration utilizing light media upflow adsorption clarification in place of settling. Kotzebue retained the pilot filter apparatus at the plant. The plan is that the existing water treatment plant will receive a major overhaul, if not be completely replaced. The dates for design and construction have not yet been specified.

Comparison of Turbidity Performance Between 2004-2005 and 2006-2007

In October 2007 Kotzebue WTP staff reviewed circular charts for the previous12month period. The highest individual effluent turbidity (IFE) value recorded for each filter each day and the highest combined filter effluent (CFE) turbidity for each day were entered into the optimization spreadsheet for evaluation. During the CPE in May 2005 the data evaluated included only some of the IFE turbidity and the regulatory reported CFE turbidity values recorded on a fixed 4 hour interval (12am, 4 am, 8 am, etc). The highest daily turbidity value for CFE was not initially used for the 2005 evaluation. During the CPE it became evident that the CFE values recorded on a 4 hour interval and used for regulatory reporting purposes seldom indicated the highest turbidity recorded that day. Because the daily filter backwashes were performed at approximately 1 pm each day, several hours were available for the typical post-backwash increase in turbidity to be reduced by the filter ripening before the next regulatory sample (4 pm). For this reason the CFE data shown in 2004-2005 graph appears to be often lower than the CFE data for 2006-2007. Directly comparing the 2004-2005 graph to the one for 2006-2007 is difficult. Once one understands that we are comparing what could be lowest daily CFE turbidity (2004-2005) to highest daily CFE turbidity (2006-2007) the improvement made since the CPE becomes more apparent.

During the 2005 CPE an attempt was made to address the difference between the regulatory reported CFE data and the highest daily turbidity by entering IFE data for the month of June 2004 as well as January and February 2005. From the 2004-2005 graph it can be seen that the highest daily IFE turbidity was always greater than the maximum regulatory reported value. Time was not available during the CPE to enter the highest daily CFE turbidity.

The data displayed on the 2006-2007 graph is the highest IFE and CFE on a daily basis. The only data that can be directly compared to the 2004-2005 graph is labeled Max Filter on each graph. These are the maximum IFE values for each day. As mentioned earlier, only a couple months of IFE data was entered for the time period 2004-2005. Not enough data was entered to make any observations

One area where a comparison can be made is the statistical analysis of the data. For the time period 2004-2005 the regulatory performance goal of 0.3 NTU was met 78% of the time. For the period 2006-2007 the regulatory performance goal was met 88% of the time. Based on the data in the spreadsheet the percent of the values meeting the optimized performance goal cannot be determined. This is because the data entered included all IFE turbidity data whether the water was being sent to waste or sent to the storage tank. For a valid evaluation only turbidity data collected when water was going to the storage tank would be used. The 2004-2005 CFE data was only the regulatory reported values. If the highest daily CFE value were entered, the percent meeting the regulatory goal would be much lower. For this reason, the increase in turbidity values meeting the regulatory performance goal, from 78% to 88%, does not accurately or completely reflect the improvement made since the first CPE.

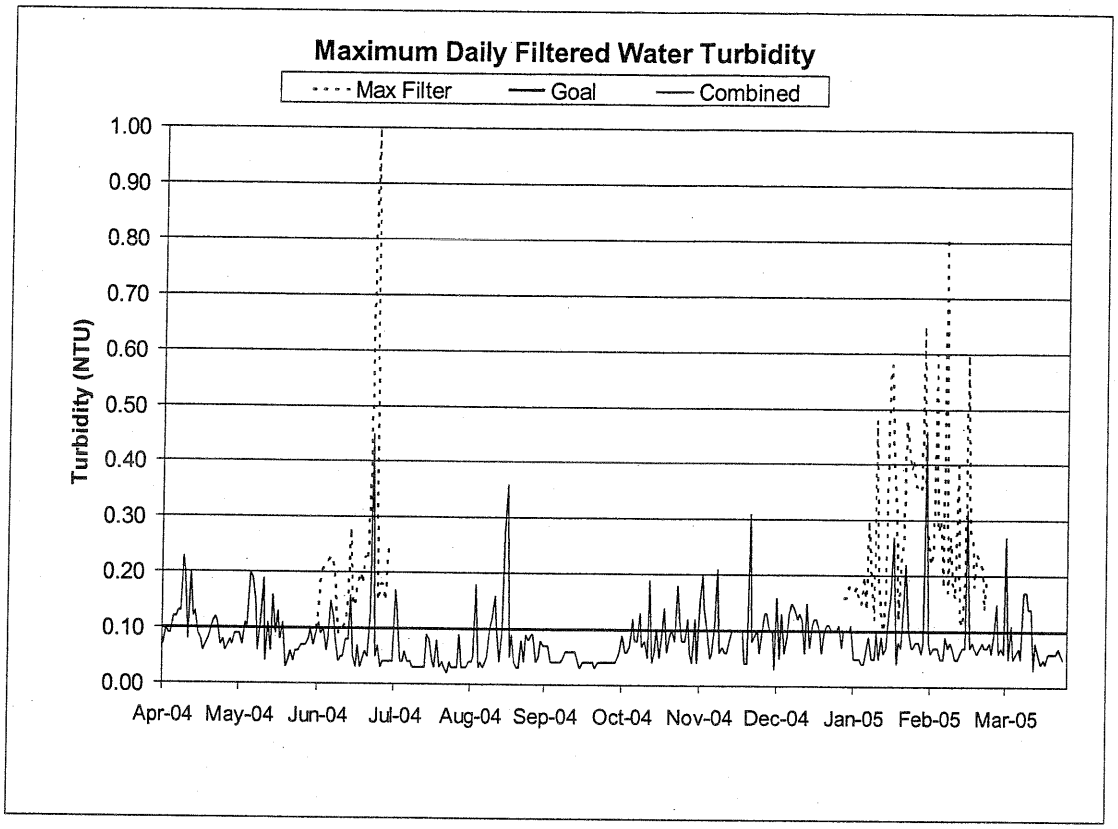

April 2004 – March 2005

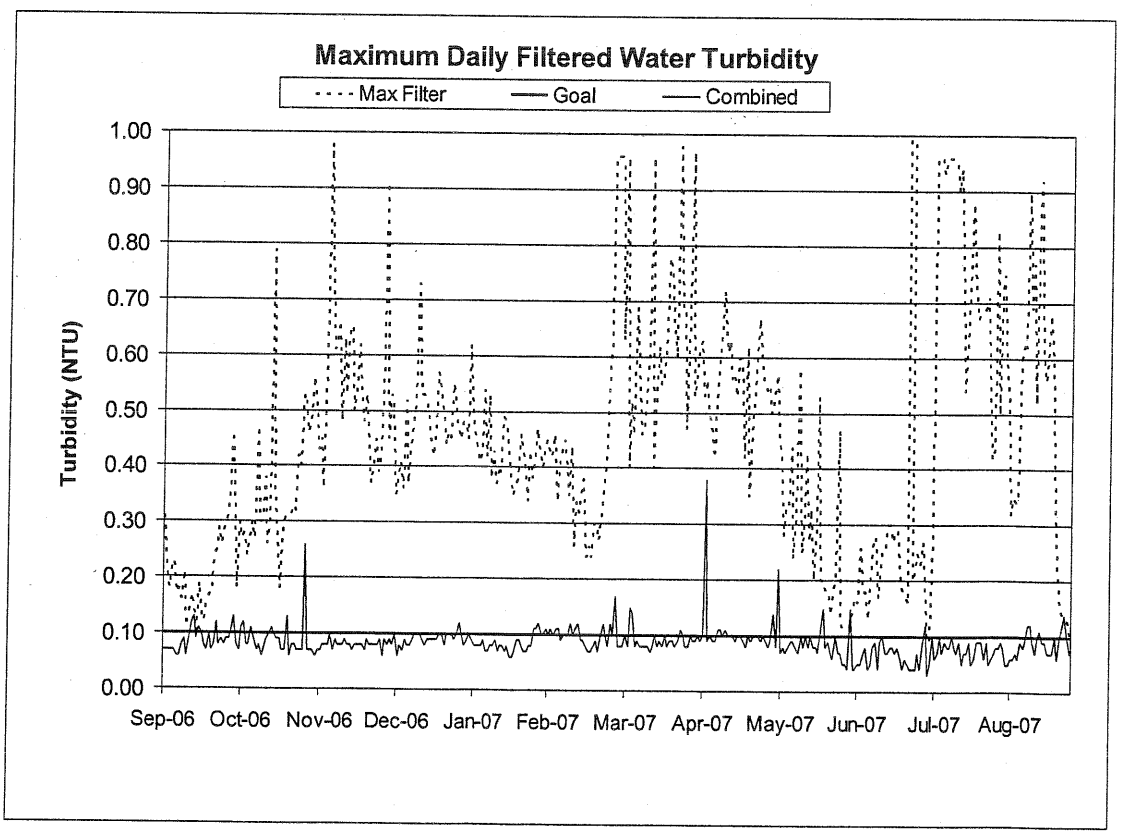

September 2006 – August 2007

DBP Rule Running Annual Average

System Name: Kotzebue Mun. Water System **PWSID:** 340060

MCL Value: **TTHM = 80 ug/L** **HAA5 = 60 ug/L**

Quarterly Monitoring Began: 1/1/2004

Quarter	Sample Date	TTHM Result	TTHM RAA	Violations	Vios Val	HAA5 Result	HAA5 RAA	Violations	Vios Val	Comments
2nd 2003	6/24/2003	44				48.1				
1st 2004	3/8/2004	120	30 (120/4)		R-MCL	140	35 (140/4)		R-MCL	No vio, 1st exceedance triggered quarterly monitoring.
2nd 2004	no sample		40 (120/3)	Mon	V-Mon R-MCL		46.7 (140/3)	Mon	V-Mon R-MCL	No MCL vio until 4 quarters of 2004
3rd 2004	no sample		60 (120/2)	Mon	V-Mon R-MCL		70 (140/2)	Mon & MCL	V-Mon V-MCL	HAA5 MCL vio, result is > 2X MCL; No TTHM vio, result is < 2X MCL.
4th 2004	12/6/2004	56.1	88	MCL	V-MCL	50.8	95.40	MCL	V-MCL	
1st 2005	no sample		56	Mon	V-Mon		50.80	Mon	V-Mon	
2nd 2005	5/11/2005	93.1	75			25	37.90			
3rd 2005	no sample		75	Mon	V-Mon		37.90	Mon	V-Mon	
4th 2005	quarter ave.	86.925	90	MCL	V-MCL	72.3	49			
1st 2006	quarter ave.	140.5	107	MCL	V-MCL	65.5	54			
2nd 2006	6/12/2006	51.4	93	MCL	V-MCL	26.5	55			
3rd 2006	quarter ave.	36.14	79			33.3	49			
4th 2006	10/16/2006	22.9	63			35.2	40			
1st 2007	quarter ave.	72.4	46			39.0	33			
2nd 2007	6/6/2007	97.9	57			113.0	55			
3rd 2007	quarter ave.	54.35	62			26.8	53			
4th 2007	11/13/2007	54.8	70			50.4	57			
1st 2008	3/4/2008	103	78			44.0	59			
2nd 2008	6/9/2008	77	72			38.0	40			
3rd 2008	9/9/2008	57.3	73			36.8	42			
4th 2008	10/20/2008	55.1	**73**			37.3	39			
1st 2009	quarter ave.	101	73			81.8	48			
2nd 2009	6/25/2009	61.1	69			31.1	47			
3rd 2009	8/19/2009	72.9	73			45.3	49			
4th 2009	11/3/2009	45.2	70			39.5	49			
1st 2010	3/10/2010	121	75			160	**69**	**MCL**		
2nd 2010	6/8/2010	68.9	77			83.9	**82**	**MCL**		

3rd 2010	9/7/2010	85.8	**80**			47.9	**83**	**MCL**		
4th 2010			92				97			
1st 2011			77.35				65.90			
			85.80				47.90			

HAAS

State of Alaska
DEPARTMENT OF ENVIRONMENTAL CONSERVATION

Quarterly Enhanced Coagulation & Softening Report
To be completed by any CWS or NTNCWS that use Conventional Filtration

System Name: Kotzebue **PWSID:** 340060 **Quarter:** 1 - 4th **Year:** 2009

				A	B	C	D	E	F	G	H	
	Month	Year	# of Samples	Average Source Water TOC (mg/L)	Average Treated Water TOC (mg/L)	Average Source Water Alkalinity (mg/L)	Required TOC Removal (%)	Actual TOC Removal (%) ((A-B)/A)*100	Alter. Comp. Criteria	Removal Value (E/D)	Compliance Value	
1	Jan	2009		11	7	76.5	40	36.4		0.91	0.91	
2	Feb	2009		12	6.9	82.5	40	42.5		1.06	1.06	
3	March	2009		11	7	83.3	40	36.4		0.91	0.91	0.96
4	April	2009		12	6.9	92.7	40	42.5		1.06	1.06	
5	May	2009		12	7.2	80.8	40	40.0		1.00	1.00	
6	June	2009		6.8	3.8	32.3	45	44.1		0.98	0.98	1.01
7	July	2009		6.3	3	36.8	45	52.4		1.16	1.16	
8	Aug	2009		6.7	3	36.8	45	55.2		1.23	1.23	
9	Sept	2009		7.2	3.7	35.7	45	48.6		1.08	1.08	1.16
10	Oct	2009		7.1	3.4	42	45	52.1		1.16	1.16	
11	Nov	2009		8	4.4	56	45	45.0		1.00	1.00	
12	Dec	2009		8.7	4.8	65	40	44.8		1.12	1.12	1.09
A: Sum of Quarterly Compliance Values												4.22
B: Running Annual Average of Quarterly Compliance Value (A/4)												1.06
C: Is the RAA Compliance Value greater than or equal to 1?												YES

For months where the system has met an Alternative Compliance Criteria, enter the Alternative Compliance Criteria Number (1-8) into Column F. The Compliance Value (Column H) for that month will be 1.

Required TOC Removal Chart

Source TOC (mg/L)	Source Alkalinity (mg/L)		
	0-60	60-120	>120
2-4	35%	25%	15%
4-8	45%	35%	25%
>8	50%	40%	30%

Find the required TOC Removal Percent based on the systems Source TOC and Alkalinity. Enter this information into the "Required TOC Removal

Signature: _____ Date: _____

State of Alaska
DEPARTMENT OF ENVIRONMENTAL CONSERVATION

Quarterly Enhanced Coagulation & Softening Report
To be completed by any CWS or NTNCWS that use Conventional Filtration

System Name: Kotzebue **PWSID:** 340060 **Quarter:** 1 - 4th **Year:** 2010

				A	B	C	D	E	F	G	H	
	Month	Year	# of Samples	Average Source Water TOC (mg/L)	Average Treated Water TOC (mg/L)	Average Source Water Alkalinity (mg/L)	Required TOC Removal (%)	Actual TOC Removal (%) ((A-B)/A)*100	Alter. Comp. Criteria	Removal Value (E/D)	Compliance Value	
1	Jan	2010		11	6.3	78.8	40	42.7		1.07	1.07	
2	Feb	2010		12	6.4	86.1	40	46.7		1.17	1.17	
3	March	2010		14	8.4	101	40	40.0		1.00	1.00	1.08
4	April	2010		13.4	7.3	114	40	45.5		1.14	1.14	
5	May	2010		8.45	5.06	50	50	40.1		0.80	0.80	
6	June	2010		6.43	2.25	28	45	65.0		1.44	1.44	1.13
7	July	2010		6.18	2.99	39.2	45	51.6		1.15	1.15	
8	Aug	2010		8.12	3	38	50	63.1		1.26	1.26	
9	Sept	2010		11.1	5.32	73	40	52.1		1.30	1.30	1.24
10	Oct	2010						#DIV/0!		#DIV/0!	#DIV/0!	
11	Nov	2010						#DIV/0!		#DIV/0!	#DIV/0!	
12	Dec	2010						#DIV/0!		#DIV/0!	#DIV/0!	#DIV/0!
A: Sum of Quarterly Compliance Values												#DIV/0!
B: Running Annual Average of Quarterly Compliance Value (A/4)												#DIV/0!
C: Is the RAA Compliance Value greater than or equal to 1?												#DIV/0!

For months where the system has met an Alternative Compliance Criteria, enter the Alternative Compliance Criteria Number (1-8) into Column F. The Compliance Value (Column H) for that month will be 1.

Required TOC Removal Chart

Source TOC (mg/L)	Source Alkalinity (mg/L)		
	0-60	60-120	>120
2-4	35%	25%	15%
4-8	45%	35%	25%
>8	50%	40%	30%

Find the required TOC Removal Percent based on the systems Source TOC and Alkalinity. Enter this information into the "Required TOC Removal

Signature: _____ Date: _____

Violation Information for

AK2340060 KOTZEBUE MUN. WATER SYSTEM

FY	Violation Number	Facility	Violation Type	Category	Status	Severity	Analyte	Analysis Measure		Compliance Begin	Compliance End
2011	3506117	DS001	02	MCL	V		TOTAL HALOACETIC A	0.0820	MG/L	07/01/2010	09/30/2010
2010	3506116	DS001	02	MCL	V		TOTAL HALOACETIC A	0.0820	MG/L	04/01/2010	06/30/2010
2010	3506115	DS001	02	MCL	V		TOTAL HALOACETIC A	0.0690	MG/L	01/01/2010	03/31/2010
2010	3506114	DS001	52	MON	V	RTC'ed	LEAD & COPPER RULE	0.0000		01/01/2009	12/31/2009
2011	3506118	TP001	46	TT	V		CARBON, TOTAL	0.0000		01/01/2009	03/31/2009

returned to compliance
with Feb 2010 Lead + Copper
sampling.

OPERATOR CERTIFICATION

Division of Water

Alaska Certified Water/Wastewater Operator Database

Regulated System Record

The current classification scoring system for the selected facility is shown below. You may also return to search results.

Facility Name: Kotzebue Water Treatment System
Community: Kotzebue
Owner/Employer: Kotzebue, City of
Type of Facility: Water Treatment
Classification Level: Class 3

Water treatment systems are classified according to a point rating system. Point values are recognized for each of the various components found in a treatment plant. Points are totaled once all components have been recognized. The total number of points determines the classification of the water treatment system. Click here to view the entire list of components for which points can be counted for water treatment. The specific components that have been recognized toward the classification of this water treatment system are as follows:

Score Category	Score
Size (Peak day design capacity, gallons per day) - 500,001 - 1,000,000	12
Water Supply Source - Surface water	6
Pretreatment - Add-heat system to heat raw water	2
Adjustment and Corrosion Control - pH adjustment	3
Activated Carbon - Powdered activated carbon treatment	4
Oxidation - Potassium permanganate	4
Coagulation - Primary coagulant	5
Coagulation - Coagulant aid, flocculent, or filter aid (3 each up to 12)	6
Flocculation - Mechanical flocculator	8
Sedimentation - Tube settlers	2
Filtration - Granular media	8
Fluoride - Sodium fluoride saturator	2
Disinfection - Liquid and powered hypochlorites	3
Disinfection - Additional points if hypochlorites are generated on-site	2
Sludge Treatment - Discharge to on-site pond, septic tank, or lagoon	2
Total	***69***

Total Score	System Classification
1-30	Class 1
31-55	Class 2
56-75	Class 3
>75	Class 4

Operators

Name	Role	Cert. Level	Expiration Date	CEU Req. Met
Lloyd Walker	Primary	WT-3	12/31/2010	No
Matthew Lazarus	Primary	WT-4	12/31/2011	No
Steven Romane	Primary	WT-1	12/31/2012	No
Jody Sours	Primary	WT-Provisional	12/31/2012	Yes

For more information, please review the Water and Wastewater Operator Certification and Training Regulation (18 AAC 74).

WATER QUALITY DATA

March 15th, 2001

Lee Johnson
Alaska Department of Environmental Conservation
601 University Avenue
Fairbanks, AK 99079

Re.: Lead-Copper Remediation

Dear Lee:

In response to our failure to meet the Copper MCL for our recent round of sampling, we have purchased two in-line pH controller units. When installed these will control the soda ash feed pumps to maintain the pH at whatever value is determined to be the optimum to control copper solubility. We have been raising the pH slowly to attempt to avoid adverse consumer response. At the present time we are manually maintaining the pH in the system to 7.0 ± 0.2. This requires the addition of approximately 100 pounds of soda ash per day. In the long run it may prove to be too expensive to utilize this method, so we are also investigating using orthophosphates. So far, I have not received the information I have requested on orthophosphates, but we are planning to at least try that option, also.

We will keep you informed of our progress. Please let us know if you have any suggestions or hints. The final solution will be applied with the consent of our consultant, Bob Thompson, Purification Technologies, Rangely, CO.

If you have further questions, please feel free to call me at 442-3470 extension 120.

Yours truly,

Rob Harris, Water Plant Operator

Date	Pb	Cu	AL - 0.015 r	AL-1.3 mg/L
1/1/1994	0.015	1.41	0.015	1.3
7/1/2000	0.01	2.49	0.015	1.3
3/1/2004	0.018	1.5	0.015	1.3
1/1/2005	0.00467	1.88	0.015	1.3
5/11/2005	0.0038	0.875	0.015	1.3
7/1/2005	0.0033	0.222	0.015	1.3
1/1/2006	0.0039	0.702	0.015	1.3
1/1/2008	0.00826	1.08	0.015	1.3

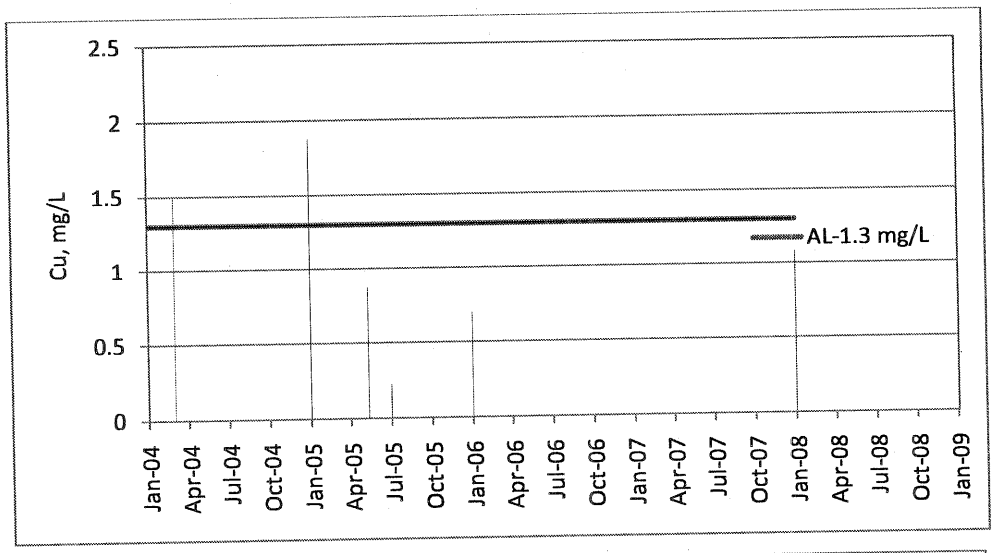

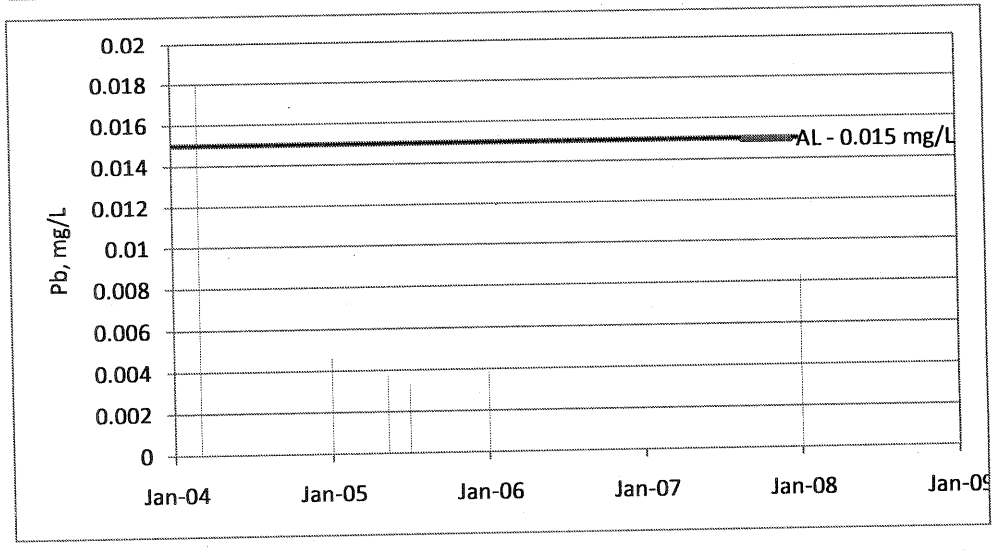

January 2007

Date	Raw							Static Mixer Flush	Filters				Filter Effluent						Cl-17	Outside Temperature
	Meter Reading	Raw Flow	Flow	Meter	Turb.	Temp.	DL Pump		#1	#2	Comb.	pH	Meter Reading	Filter Effluen	Flow	Meter	Old Res.	New Res.	(mg/L)	
	840,036	(gal)	(gpm)	(gpm)	(NTU)	(deg. F)			(NTU)	(NTU)	(NTU)		540,589	(gal)	(gpm)	(gpm)	(ft)	(ft)		
1-Jan	840,296	260,000	180.6	205	1.326	34.5	20	yes	0.042	0.051	0.049	6.67	540,841	252,000	175.0	197.0	37.0	35.9	1.77	-12
2-Jan	840,574	278,000	193.1	205	2.966	35.2	20	yes	0.038	0.046	0.044	6.68	541,113	272,000	188.9	194.0	35.8	35.8	1.95	-11
3-Jan	840,848	274,000	190.3	205	1.316	34.2	20	yes	0.034	0.041	0.040	6.66	541,380	267,000	185.4	188.0	35.6	35.6	1.72	-20
4-Jan	841,125	277,000	192.4	200	1.248	34.7	20	yes	0.035	0.043	0.041	6.66	541,649	269,000	186.8	197.0	36.5	35.5	2.15	-13
5-Jan	841,401	276,000	191.7	205	1.261	35.2	20	yes	0.034	0.043	0.041	6.66	541,921	272,000	188.9	201.0	36.2	35.2	2.12	-19
6-Jan	841,677	276,000	191.7	205	1.237	34.5	20	yes	0.035	0.043	0.041	6.64	542,190	269,000	186.8	200.0	35.9	35.0	1.99	-25
7-Jan	841,956	279,000	193.8	205	1.176	34.7	20	yes	0.037	0.045	0.043	6.67	542,466	276,000	191.7	200.0	35.4	34.5	2.17	-27
8-Jan	842,231	275,000	191.0	205	1.184	33.8	20	yes	0.040	0.049	0.046	6.68	542,735	269,000	186.8	182.0	34.7	33.9	1.90	-34
9-Jan	842,504	273,000	189.6	205	1.171	34.7	20	yes	0.039	0.048	0.047	6.66	543,000	265,000	184.0	195.0	34.2	33.6	2.29	-16
10-Jan	842,780	276,000	191.7	205	1.122	34.5	20	yes	0.037	0.045	0.044	6.67	543,265	265,000	184.0	200.0	33.9	33.3	2.16	-1
11-Jan	843,054	274,000	190.3	205	1.225	34.7	20	yes	0.042	0.051	0.049	6.67	543,528	263,000	182.6	194.0	33.5	33.0	2.27	14
12-Jan	843,327	273,000	189.6	205	2.055	34.9	20	yes	0.036	0.044	0.042	6.68	543,798	270,000	187.5	193.0	33.3	32.8	2.25	16
13-Jan	843,603	276,000	191.7	200	1.577	34.7	20	yes	0.038	0.047	0.045	6.69	544,071	273,000	189.6	197.0	33.3	32.9	2.25	17
14-Jan	843,879	276,000	191.7	203	2.645	34.7	20	yes	0.040	0.050	0.047	6.68	544,342	271,000	188.2	199.0	33.2	32.7	2.25	12
15-Jan	844,151	272,000	188.9	200	2.756	35.1	20	yes	0.044	0.044	0.051	6.69	544,602	260,000	180.6	200.0	32.9	32.5	1.73	-1
16-Jan	844,426	275,000	191.0	200	3.579	33.6	20	yes	0.038	0.046	0.044	6.69	544,873	271,000	188.2	198.0	32.6	32.2	2.24	-15
17-Jan	844,702	276,000	191.7	200	1.168	34.2	20	yes	0.037	0.046	0.043	6.67	545,146	273,000	189.6	198.0	32.6	32.2	2.22	-18
18-Jan	844,976	274,000	190.3	200	1.287	34.7	20	yes	0.051	0.064	0.060	6.73	545,415	269,000	186.8	133.0	32.6	32.3	2.45	1
19-Jan	845,249	273,000	189.6	200	1.626	34.7	20	yes	0.042	0.047	0.041	6.68	545,678	263,000	182.6	198.0	32.2	31.9	1.92	12
20-Jan	845,527	278,000	193.1	200	1.594	34.2	20	yes	0.045	0.047	0.041	6.66	545,951	273,000	189.6	198.0	32.3	32.1	2.49	6
21-Jan	845,805	278,000	193.1	201	1.500	34.7	20	yes	0.046	0.050	0.043	6.66	546,222	271,000	188.2	193.0	32.2	32.0	2.08	5
22-Jan	846,075	270,000	187.5	200	1.378	34.0	20	yes	0.049	0.053	0.045	6.68	546,482	260,000	180.6	193.0	31.7	31.6	2.20	-3
23-Jan	846,348	273,000	189.6	200	1.040	34.9	20	yes	0.047	0.051	0.043	6.67	546,750	268,000	186.1	198.0	31.5	31.4	2.49	-8
24-Jan	846,620	272,000	188.9	200	1.770	34.2	20	yes	0.045	0.049	0.042	6.67	547,010	260,000	180.6	199.0	31.1	31.1	2.57	-14
25-Jan	846,895	275,000	191.0	200	1.618	34.0	20	yes	0.042	0.046	0.039	6.65	547,279	269,000	186.8	195.0	30.9	30.9	2.50	-21
26-Jan	847,169	274,000	190.3	200	1.593	34.2	20	yes	0.042	0.046	0.039	6.64	547,545	266,000	184.7	193.0	30.7	30.8	2.44	-8
27-Jan	847,442	273,000	189.6	200	1.553	35.1	20	yes	0.044	0.048	0.041	6.64	547,815	270,000	187.5	199.0	30.8	30.9	2.14	3
28-Jan	847,718	276,000	191.7	201	1.511	34.0	20	yes	0.039	0.043	0.036	6.63	548,078	263,000	182.6	197.0	30.5	30.6	2.45	30
29-Jan	847,987	269,000	186.8	200	1.540	34.6	20	yes	0.042	0.046	0.039	6.62	548,344	266,000	184.7	197.0	30.0	30.2	1.99	26
30-Jan	848,260	273,000	189.6	200	1.559	35.4	20	yes	0.041	0.045	0.037	6.63	548,613	269,000	186.8	194.0	29.9	30.1	2.06	
31-Jan	848,535	275,000	191.0	200		35.1	20	yes	0.046	0.052	0.042	6.67	548,885	272,000	188.9	197.0	29.8	30.0	2.37	35
														8296000						
TOTALS		8,499,000																		
AVERAGE		274,161.3	190.4	201.9	1.619	34.57			0.041	0.047	0.043	6.67		267,613	185.8			32.7	2.18	
MAXIMUM		279000	194	205	3.579	35.40			0.051	0.064	0.060	6.73		276000	191.7			35.9	2.57	
MINIMUM		269000	187	200	1.040	33.60			0.034	0.041	0.036	6.62		260000	180.6			30.0	1.72	

February 2007

Date	Raw							Static Mixer Flush	Filters				Filter Effluent						Cl-17	Outside Temperature
	Meter Reading	Raw Flow	Flow	Meter	Turb.	Temp.	DL Pump		#1	#2	Comb.	pH	Meter Reading	Filter Effluen	Flow	Meter	Old Res.	New Res.	(mg/L)	
	848,535	(gal)	(gpm)	(gpm)	(NTU)	(deg. F)			(NTU)	(NTU)	(NTU)		548,885	(gal)	(gpm)	(gpm)	(ft)	(ft)		
1-Feb	848,808	273,000	189.6	200	1.695	33.8	20	yes	0.038	0.041	0.036	6.64	549,156	271,000	188.2	197.0	29.8	30.0	2.57	28
2-Feb	849,078	270,000	187.5	200	1.714	34.5	20	yes	0.045	0.049	0.041	6.64	549,426	270,000	187.5	194.0	29.8	30.0	2.71	32
3-Feb	849,351	273,000	189.6	200	1.747	34.9	20	yes	0.041	0.048	0.039	6.63	549,691	265,000	184.0	193.0	29.8	30.0	2.82	31
4-Feb	849,636	285,000	197.9	200	1.670	34.5	20	yes	0.046	0.051	0.042	6.63	549,956	265,000	184.0	198.0	29.2	30.0	2.73	30
5-Feb	849,894	258,000	179.2	200	3.694	34.9	20	yes	0.043	0.048	0.039	6.64	550,219	263,000	182.6	193.0	29.6	29.3	2.73	12
6-Feb	850,159	265,000	184.0	200	2.238	35.1	20	yes	0.045	0.051	0.041	6.65	550,472	253,000	175.7	194.0	28.9	29.3	2.59	20
7-Feb	850,432	273,000	189.6	200	1.822	34.2	20	yes	0.042	0.046	0.039	6.64	550,739	267,000	185.4	192.0	28.7	29.1	2.59	20
8-Feb	850,701	269,000	186.8	200	1.749	34.0	20	yes	0.038	0.042	0.035	6.63	550,998	259,000	179.9	194.0	28.4	28.9	2.68	6
9-Feb	850,972	271,000	188.2	200	2.055	34.0	20	yes	0.041	0.045	0.037	6.63	551,256	258,000	179.2	192.0	28.2	28.8	2.52	4
10-Feb	851,259	287,000	199.3	200	2.238	34.5	20	yes	0.043	0.048	0.039	6.63	551,541	285,000	197.9	194.0	28.2	28.7	1.97	-7
11-Feb	851,538	279,000	193.8	200	1.919	34.0	20	yes	0.041	0.047	0.038	6.63	551,817	276,000	191.7	178.0	28.2	28.7	2.13	-5
12-Feb	851,774	236,000	163.9	200	1.944	34.2	20	yes	0.051	0.057	0.046	6.67	552,043	226,000	156.9	192.0	27.6	28.2	2.66	17
13-Feb	852,040	266,000	184.7	200	1.867	34.0	20	yes	0.044	0.049	0.040	6.68	552,299	256,000	177.8	201.0	27.3	27.9	2.65	6
14-Feb	852,307	267,000	185.4	200	1.941	33.8	20	yes	0.040	0.043	0.037	6.64	552,561	262,000	181.9	179.0	27.3	28.0	2.63	-10
15-Feb	852,576	269,000	186.8	200	2.144	34.0	20	yes	0.043	0.046	0.039	6.65	552,825	264,000	183.3	181.0	27.2	27.9	2.30	10
16-Feb	852,839	263,000	182.6	200	2.202	33.1	20	yes	0.049	0.053	0.044	6.65	553,084	259,000	179.9	190.0	27.1	27.8	2.35	2
17-Feb	853,109	270,000	187.5	195	2.012	33.4	20	yes	0.044	0.051	0.042	6.65	553,342	258,000	179.2	189.0	27.3	28.0	2.22	-11
18-Feb	853,378	269,000	186.8	200	2.871	33.4	20	yes	0.052	0.042	0.051	6.66	553,601	259,000	179.9	190.0	27.2	27.9	2.47	-7
19-Feb	853,648	270,000	187.5	200	3.070	33.8	20	yes	0.052	0.065	0.053	6.66	553,868	267,000	185.4	189.0	26.7	27.5	2.50	-15
20-Feb	853,907	259,000	179.9	195	2.620	32.9	20	yes	0.043	0.051	0.042	6.64	554,102	234,000	162.5	190.0	26.2	27.1	2.25	-9
21-Feb	854,176	269,000	186.8	195	2.186	33.6	20	yes	0.046	0.057	0.046	6.63	554,362	260,000	180.6	189.0	26.3	27.2	2.42	-21
22-Feb	854,442	266,000	184.7	195	2.054	32.7	20	yes	0.049	0.059	0.049	6.62	554,622	260,000	180.6	191.0	26.1	27.0	2.90	-25
23-Feb	854,731	289,000	200.7	210	1.869	32.9	20	yes	0.050	0.060	0.049	6.61	554,902	280,000	194.4	210.0	26.1	27.0	2.33	-17
24-Feb	855,022	291,000	202.1	210	1.466	33.3	20	yes	0.058	0.070	0.058	6.63	555,180	278,000	193.1	210.0	26.1	27.1	1.91	-21
25-Feb	855,316	294,000	204.2	210	1.464	33.3	20	yes	0.048	0.057	0.047	6.62	555,457	277,000	192.4	209.0	25.8	26.8	2.49	-12
26-Feb	855,604	288,000	200.0	210	1.509	33.4	20	yes	0.042	0.050	0.041	6.62	555,738	281,000	195.1	206.0	25.5	26.5	2.37	-19
27-Feb	855,893	289,000	200.7	210	1.597	33.1	20	yes	0.050	0.060	0.050	6.63	556,013	275,000	191.0	210.0	25.4	26.5	2.40	-24
28-Feb	856,183	290,000	201.4	210	2.187	32.9	20	yes	0.049	0.060	0.049	6.62	556,295	282,000	195.8	208.0	25.4	26.5	2.22	-25
TOTALS		7,648,000												7410000						
AVERAGE		273,142.9	189.7	201.4	2.055	33.79			0.045	0.052	0.043	6.64		264,643	183.8	194.8	27.5	28.1	2.47	0
MAXIMUM		294000	204	210	3.694	35.10			0.058	0.070	0.058	6.68		285000	197.9	210.0	29.8	30.0	2.90	32
MINIMUM		236000	164	195	1.464	32.70			0.038	0.042	0.035	6.61		226000	156.9	178.0	25.4	26.5	1.91	-25

March 2007

Date	Raw							Static Mixer Flush	Filters				Filter Effluent						Cl-17	Outside Temperature
	Meter Reading	Raw Flow	Flow	Meter	Turb.	Temp.	DL Pump		#1	#2	Comb.	pH	Meter Reading	Filter Effluen	Flow	Meter	Old Res.	New Res.	(mg/L)	
	856,183	(gal)	(gpm)	(gpm)	(NTU)	(deg. F)			(NTU)	(NTU)	(NTU)		556,295	(gal)	(gpm)	(gpm)	(ft)	(ft)		
1-Mar	856,474	291,000	202.1	210	2.317	32.9	20	yes	0.047	0.058	0.047	6.61	556,576	281,000	195.1	202.0	25.4	26.5	2.43	-30
2-Mar	856,763	289,000	200.7	210	2.651	33.8	20	yes	0.050	0.063	0.052	6.62	556,858	282,000	195.8	206.0	25.4	26.5	2.38	-21
3-Mar	857,052	289,000	200.7	210	2.629	33.6	20	yes	0.050	0.061	0.050	6.62	557,136	278,000	193.1	208.0	25.8	26.8	2.22	-14
4-Mar	857,356	304,000	211.1	210	2.790	32.5	20	yes	0.052	0.059	0.050	6.62	557,434	298,000	206.9	208.0	25.9	26.8	2.10	-17
5-Mar	857,627	271,000	188.2	210	2.921	33.4	20	yes	0.049	0.053	0.044	6.59	557,690	256,000	177.8	207.0	25.5	26.5	2.45	-20
6-Mar	857,915	288,000	200.0	210	2.766	33.1	20	yes	0.050	0.056	0.048	6.60	557,972	282,000	195.8	208.0	25.4	26.4	2.33	-18
7-Mar	858,214	299,000	207.6	215	3.373	32.7	20	yes	0.052	0.056	0.049	6.62	558,253	281,000	195.1	208.0	25.4	26.5	2.61	-16
8-Mar	858,513	299,000	207.6	215	3.181	33.1	20	yes	0.054	0.058	0.052	6.70	558,531	278,000	193.1	207.0	24.8	26.0	2.41	-20
9-Mar	858,809	296,000	205.6	220	2.639	33.4	20	yes	0.047	0.056	0.046	6.52	558,812	281,000	195.1	205.0	24.5	25.7	2.35	-11
10-Mar	859,107	298,000	206.9	220	2.201	33.4	20	yes	0.045	0.056	0.045	6.51	559,091	279,000	193.8	202.0	24.1	25.4	2.79	-11
11-Mar	859,397	290,000	201.4	220	2.030	32.7	20	yes	0.048	0.059	0.048	6.56	559,365	274,000	190.3	203.0	23.5	24.9	2.82	-15
12-Mar	859,686	289,000	200.7	220	1.786	32.7	20	yes	0.046	0.054	0.045	6.57	559,633	268,000	186.1	202.0	22.6	24.1	2.86	-19
13-Mar	859,980	294,000	204.2	220	1.749	33.3	20	yes	0.044	0.053	0.043	6.52	559,912	279,000	193.8	201.0	22.0	23.7	2.39	-19
14-Mar	860,274	294,000	204.2	220	1.816	32.9	20	yes	0.043	0.055	0.044	6.52	560,186	274,000	190.3	200.0	21.6	23.3	2.54	-16
15-Mar	860,571	297,000	206.3	220	2.506	33.3	20	yes	0.042	0.054	0.042	6.49	560,460	274,000	190.3	197.0	21.2	23.0	2.39	-17
16-Mar	860,883	312,000	216.7	240	2.814	33.6	20	yes	0.045	0.059	0.046		560,723	263,000	182.6	197.0	20.8	22.6	2.61	-22
17-Mar	861,205	322,000	223.6	240	2.770	33.3	20	yes	0.043	0.068	0.057	6.51	560,983	260,000	180.6	125.0	21.5	21.8	2.79	-18
18-Mar	861,525	320,000	222.2	240	2.367	34.0	20	yes	0.056	0.063	0.052	6.48	561,246	263,000	182.6	195.0	21.0	21.5	2.53	-17
19-Mar	861,844	319,000	221.5	240	2.229	33.3	20	yes	0.059	0.070	0.057	6.51	561,500	254,000	176.4	194.0	19.9	20.6	2.50	-11
20-Mar	862,134	290,000	201.4	210	2.646	33.3	20	yes	0.046	0.053	0.043	6.57	561,765	265,000	184.0	191.0	19.4	20.3	2.53	-18
21-Mar	862,448	314,000	218.1	240	2.675	33.6	20	yes	0.046	0.056	0.046	6.55	562,002	237,000	164.6	189.0	18.5	19.6	2.37	-14
22-Mar	862,688	240,000	166.7	240	7.983	33.6	15	yes	0.053	0.075	0.057	6.59	562,187	185,000	128.5	193.0	17.0	18.4	2.02	-17
23-Mar	863,011	323,000	224.3	240	4.157	37.2	15	yes	0.061	0.069	0.052	6.74	562,446	259,000	179.9	252.0	16.7	18.3	2.15	-23
24-Mar	863,336	325,000	225.7	240	3.029	33.8	15	yes	0.059	0.054	0.042	6.58	562,773	327,000	227.1	239.0	17.7	19.0	2.50	-22
25-Mar	863,668	332,000	230.6	243	2.381	32.7	15	yes	0.043	0.060	0.044	6.58	563,105	332,000	230.6	246.0	18.5	19.6	2.50	-26
26-Mar	863,989	321,000	222.9	240	2.228	36.5	15	yes	0.069	0.054	0.041	6.57	563,441	336,000	233.3	240.0	18.4	19.5	2.63	-23
27-Mar	864,315	326,000	226.4	240	2.581	33.3	15	yes	0.047	0.045	0.042	6.54	563,750	309,000	214.6	243.0	18.7	19.7	2.55	-10
28-Mar	864,641	326,000	226.4	240	3.544	32.9	15	yes	0.105	0.053	0.043	6.55	564,048	298,000	206.9	242.0	19.3	20.2	2.99	-8
29-Mar	864,966	325,000	225.7	240	3.779	33.6	15	yes	0.069	0.054	0.044	6.56	564,401	353,000	245.1	240.0	19.8	20.6	1.67	5
30-Mar	865,295	329,000	228.5	240	3.633	36.5	20	yes	0.053	0.054	0.044	6.56	564,727	326,000	226.4	128.0	20.7	21.2	2.82	15
31-Mar	865,622	327,000	227.1	240	3.429	35.6	20	yes	0.043	0.049	0.044	6.54	565,051	324,000	225.0	242.0	21.1	21.5	2.81	20
TOTALS		9,439,000												8756000						
AVERAGE		304,483.9	211.4	227.2	2.890	33.66			0.052	0.058	0.047	6.57		282,452	196.1	207.1	21.7	22.8	2.49	-15
MAXIMUM		332000	231	243	7.983	37.20			0.105	0.075	0.057	6.74		353000	245.1	252.0	25.9	26.8	2.99	20
MINIMUM		240000	167	210	1.749	32.50			0.042	0.045	0.041	6.48		185000	128.5	125.0	16.7	18.3	1.67	-26

April 2007

Date	Raw							Static Mixer Flush	Filters				Filter Effluent						Cl-17	Outside Temperature
	Meter Reading	Raw Flow	Flow	Meter	Turb.	Temp.	DL Pump		#1	#2	Comb.	pH	Meter Reading	Filter Effluen	Flow	Meter	Old Res.	New Res.	(mg/L)	
	865,622	(gal)	(gpm)	(gpm)	(NTU)	(deg. F)			(NTU)	(NTU)	(NTU)		565,051	(gal)	(gpm)	(gpm)	(ft)	(ft)		
1-Apr	865,955	333,000	231.3	248	3.311	33.6	15	yes	0.043	0.049	0.044	6.54	565,378	327,000	227.1	243.0	19.7	21.6	2.74	24
2-Apr	866,281	326,000	226.4	240	3.233	33.1	15	yes	0.098	0.046	0.040	6.55	565,697	319,000	221.5	243.0	21.2	21.7	2.89	24
3-Apr	866,604	323,000	224.3	240	3.094	33.4	15	yes	0.042	0.047	0.042	6.52	566,023	326,000	226.4	242.0	21.9	22.1	2.77	20
4-Apr	866,930	326,000	226.4	240	2.704	33.3	15	yes	0.037	0.047	0.041	6.52	566,354	331,000	229.9	254.0	22.4	22.5	2.80	5
5-Apr	867,258	328,000	227.8	240	2.509	36.7	15	yes	0.037	0.048	0.042	6.52	566,679	325,000	225.7	245.0	22.9	22.9	2.78	2
6-Apr	867,584	326,000	226.4	240	2.431	37.2	15	yes	0.040	0.046	0.043	6.52	567,007	328,000	227.8	247.0	23.6	23.5	2.67	19
7-Apr	867,911	327,000	227.1	240	2.294	36.5	15	yes	0.039	0.054	0.047	6.52	567,339	332,000	230.6	238.0	24.6	24.2	2.95	16
8-Apr	868,240	329,000	228.5	240	2.063	33.8	15	yes	0.041	0.057	0.047	6.53	567,666	327,000	227.1	251.0	25.4	24.8	2.88	12
9-Apr	868,565	325,000	225.7	240	2.075	33.8	15	yes	0.042	0.055	0.047	6.53	567,989	323,000	224.3	256.0	25.8	25.1	2.87	18
10-Apr	868,891	326,000	226.4	240	2.118	33.4	15	yes	0.040	0.055	0.047	6.50	568,314	325,000	225.7	252.0	26.2	25.4	2.52	18
11-Apr	869,218	327,000	227.1	240	2.646	36.1	15	yes	0.041	0.054	0.047	6.53	568,645	331,000	229.9	246.0	26.9	26.0	2.89	23
12-Apr	869,546	328,000	227.8	240	2.314	37.0	15	yes	0.208	0.044	0.045	6.52	568,953	308,000	213.9	123.0	27.0	26.0	2.87	12
13-Apr	869,874	328,000	227.8	240	2.416	36.5	15	yes	0.083	0.051	0.049	6.53	569,292	339,000	235.4	240.0	28.3	27.0	2.88	10
14-Apr	870,198	324,000	225.0	240	2.825	37.4	15	yes	0.041	0.057	0.048	6.54	569,617	325,000	225.7	241.0	28.8	27.4	3.00	12
15-Apr	870,528	330,000	229.2	240	2.700	37.0	15	yes	0.044	0.056	0.049	6.55	569,949	332,000	230.6	243.0	29.0	27.6	2.99	1
16-Apr	870,852	324,000	225.0	240	2.543	36.3	15	yes	0.042	0.135	0.047	6.52	570,263	314,000	218.1	229.0	29.1	27.6	3.01	9
17-Apr	871,175	323,000	224.3	230	2.365	33.1	7.5	yes	0.040	0.050	0.044	6.52	570,585	322,000	223.6	234.0	29.7	28.1	3.16	-2
18-Apr	871,510	335,000	232.6	240	2.714	34.2	7.5	yes	0.050	0.046	0.041	6.47	570,922	337,000	234.0	141.0	30.3	28.5	3.41	35
19-Apr	871,824	314,000	218.1	230	2.621	33.8	7.5	yes	0.052	0.051	0.042	6.48	571,242	320,000	222.2	123.0	30.4	28.6	3.58	10
20-Apr	872,139	315,000	218.8	230	2.616	33.4	7.5	yes	0.038	0.051	0.039	6.50	571,559	317,000	220.1	232.0	30.7	28.8	3.40	12
21-Apr	872,454	315,000	218.8	230	2.689	33.4	7.5	yes	0.041	0.054	0.045	6.52	571,873	314,000	218.1	231.0	31.0	29.0	0.18	11
22-Apr	872,772	318,000	220.8	230	2.701	33.8	7.5	yes	0.039	0.053	0.048	6.52	572,192	319,000	221.5	237.0			2.97	20
23-Apr	873,079	307,000	213.2	230	2.603	33.8	7.5	yes	0.042	0.053	0.050	6.52	572,500	308,000	213.9	224.0	31.4	29.4	2.41	25
24-Apr	873,395	316,000	219.4	230	2.289	33.6	7.5	yes	0.062	0.051	0.060	6.50	572,813	313,000	217.4	230.0	31.8	29.6	2.82	17
25-Apr	873,709	314,000	218.1	230	1.846	33.6	7.5	yes	0.037	0.051	0.046	6.52	573,131	318,000	220.8	118.0	32.3	30.0	3.00	15
26-Apr	874,018	309,000	214.6	225	2.804	38.1	7.5	yes	0.035	0.049	0.042	6.53	573,446	315,000	218.8	230.0	32.8	30.4	2.83	17
27-Apr	874,307	289,000	200.7	220	3.133	33.6	7.5	yes	0.039	0.046	0.043	6.52	573,738	292,000	202.8	205.0	32.8	30.4	3.12	18
28-Apr	874,593	286,000	198.6	210	3.026	33.8	7.5	yes	0.040	0.051	0.044	6.51	574,025	287,000	199.3	205.0	32.8	30.4	3.05	17
29-Apr	874,874	281,000	195.1	200	3.114	33.8	7.5	yes	0.041	0.050	0.045	6.54	574,308	283,000	196.5	200.0	32.5	30.2	3.02	18
30-Apr	875,138	264,000	183.3	200	3.029	34.0	7.5	yes	0.038	0.046	0.042	6.52	574,570	262,000	181.9	197.0	31.9	29.8	3.05	23
														9519000						
TOTALS		9,516,000												317,300	220.3	220.0	28.0	26.9	2.85	15
AVERAGE		317,200.0	220.3	232.8	2.628	34.70			0.050	0.053	0.045	6.52		339000	235.4	256.0	32.8	30.4	3.58	35
MAXIMUM		335000	233	248	3.311	38.10			0.208	0.135	0.060	6.55		262000	181.9	118.0	21.2	21.7	0.18	-2
MINIMUM		264000	183	200	1.846	33.10			0.035	0.044	0.039	6.47								

May 2007

Date	Raw							Static Mixer Flush	Filters				Filter Effluent						Cl-17	Temperature
	Meter Reading	Raw Flow	Flow	Meter	Turb.	Temp.	DL Pump		#1	#2	Comb.	pH	Meter Reading	Filter Effluen	Flow	Meter	Old Res.	New Res.	(mg/L)	Outside
	875,138	(gal)	(gpm)	(gpm)	(NTU)	(deg. F)			(NTU)	(NTU)	(NTU)		574,570	(gal)	(gpm)	(gpm)	(ft)	(ft)		
1-May	875,430	292,000	202.8	220	2.812	34.0	7.5	yes	0.039	0.052	0.046	6.51	574,866	296,000	205.6	219.0	32.1	29.9	2.92	23
2-May	875,729	299,000	207.6	220	2.751	33.8	7.5	yes	0.038	0.052	0.045	6.53	575,168	302,000	209.7	218.0	32.1	29.9	3.01	19
3-May	876,028	299,000	207.6	220	2.612	34.0	7.5	yes	0.039	0.052	0.046	6.51	575,473	305,000	211.8	220.0	32.5	30.2	2.91	13
4-May	876,324	296,000	205.6	220	2.598	34.0	7.5	yes	0.040	0.050	0.046	6.54	575,771	298,000	206.9	218.0	32.7	30.3	2.87	13
5-May	876,613	289,000	200.7	220	2.578	33.8	7.5	yes	0.037	0.050	0.043	6.52	576,053	282,000	195.8	218.0	32.6	30.3	2.89	15
6-May	876,915	302,000	209.7	220	2.479	33.6	7.5	yes	0.039	0.051	0.045	6.52	576,358	305,000	211.8	222.0	32.8	30.5	2.91	22
7-May	877,212	297,000	206.3	220	2.511	33.8	7.5	yes	0.042	0.057	0.050	6.52	576,652	294,000	204.2	223.0	32.7	30.4	2.85	17
8-May	877,509	297,000	206.3	220	2.570	34.2	7.5	yes	0.036	0.046	0.042	6.50	576,954	302,000	209.7	220.0	32.9	30.4	2.86	21
9-May	877,809	300,000	208.3	220	2.620	34.2	7.5	yes	0.038	0.051	0.047	6.50	577,257	303,000	210.4	114.0	33.0	30.5	2.79	27
10-May	878,105	296,000	205.6	220	2.619	33.6	7.5	yes	0.038	0.051	0.044	6.51	577,557	300,000	208.3	220.0	32.8	30.4	2.76	13
11-May	878,403	298,000	206.9	220	2.662	34.0	7.5	yes	0.039	0.052	0.046	6.52	577,858	301,000	209.0	218.0	32.8	30.4	2.68	16
12-May	878,700	297,000	206.3	220	2.657	33.8	7.5	yes	0.037	0.046	0.041	6.52	578,158	300,000	208.3	215.0	33.1	30.7	2.76	18
13-May	878,977	277,000	192.4	220	2.530	33.8	7.5	yes	0.040	0.049	0.045	6.54	578,453	295,000	204.9	218.0	32.8	30.4	2.72	14
14-May	879,294	317,000	220.1	220	2.506	34.0	7.5	yes	0.043	0.050	0.047	6.53	578,742	289,000	200.7	218.0	32.3	30.0	2.68	15
15-May	879,589	295,000	204.9	220	2.497	34.0	7.5	yes	0.038	0.046	0.042	6.56	579,037	295,000	204.9	216.0	32.0	29.7	2.78	24
16-May	879,879	290,000	201.4	220	2.478	34.0	7.5	yes	0.039	0.045	0.042	6.50	579,330	293,000	203.5	210.0	32.0	29.7	2.65	37
17-May	880,178	299,000	207.6	220	2.548	34.0	7.5	yes	0.042	0.048	0.048	6.52	579,632	302,000	209.7	214.0	32.0	29.7	2.67	36
18-May	880,470	292,000	202.8	220	2.584	34.0	7.5	yes	0.040	0.047	0.048	6.54	579,924	292,000	202.8	112.0	31.8	29.6	2.55	34
19-May	880,764	294,000	204.2	220	2.609	34.7	7.5	yes	0.039	0.046	0.042	6.54	580,213	289,000	200.7	214.0	31.8	29.7	2.72	24
20-May	881,066	302,000	209.7	220	2.595	34.5	7.5	yes	0.040	0.046	0.044	6.55	580,518	305,000	211.8	218.0	32.0	29.8	2.64	22
21-May	881,338	272,000	188.9	220	2.539	35.1	7.5	yes	0.047	0.055	0.054	6.73	580,741	223,000	154.9	223.0	31.3	29.3	2.69	40
22-May	881,641	303,000	210.4	220	2.548	34.7	7.5	yes	0.042	0.049	0.044	6.55	581,040	299,000	207.6	221.0	31.3	29.2	2.75	34
23-May	881,947	306,000	212.5	220	2.482	35.2	7.5	yes	0.042	0.052	0.046	6.56	581,342	302,000	209.7	223.0	31.4	29.3	2.72	39
24-May	882,248	301,000	209.0	220	2.513	35.2	7.5	yes	0.073	0.087	0.079	6.60	581,631	289,000	200.7	228.0	31.5	29.4	2.64	32
25-May	882,532	284,000	197.2	220	2.573	35.2	7.5	yes	0.041	0.048	0.042	6.57	581,912	281,000	195.1	215.0	31.5	29.4	2.59	33
26-May	882,830	298,000	206.9	220	2.602	35.8	15	yes	0.041	0.046	0.042	6.56	582,210	298,000	206.9	210.0	31.9	29.7	2.63	31
27-May	883,129	299,000	207.6	220	2.661	35.4	15	yes	0.038	0.043	0.039	6.54	582,510	300,000	208.3	221.0	32.1	29.9	2.67	27
28-May	883,425	296,000	205.6	220	2.674	35.6	15	yes	0.041	0.048	0.043	6.53	582,803	293,000	203.5	219.0	32.4	30.1	2.71	26
29-May	883,723	298,000	206.9	220	2.658	36.0	15	yes	0.035	0.041	0.037	6.54	583,103	300,000	208.3	126.0	32.7	30.3	2.74	29
30-May	884,019	296,000	205.6	220	2.719	35.8	15	yes	0.038	0.046	0.041	6.47	583,397	294,000	204.2	219.0	32.9	30.5	2.37	38
31-May	884,316	297,000	206.3	220	2.286	36.0	15	yes	0.039	0.039	0.039	6.51	583,695	298,000	206.9	218.0	33.2	30.7	2.77	33
TOTALS		9,178,000												9125000						
AVERAGE		296,064.5	205.6	220.0	2.583	34.51			0.041	0.050	0.045	6.54		294,355	204.4	208.6	32.3	30.0	2.74	25
MAXIMUM		317000	220	220	2.812	36.00			0.073	0.087	0.079	6.73		305000	211.8	228.0	33.2	30.7	3.01	40
MINIMUM		272000	189	220	2.286	33.60			0.035	0.039	0.037	6.47		223000	154.9	112.0	31.3	29.2	2.37	13

June 2007

Date	Raw							Static Mixer Flush	Filters				Filter Effluent						Cl-17	Outside Temperature
	Meter Reading	Raw Flow	Flow	Meter	Turb.	Temp.	DL Pump		#1	#2	Comb.	pH	Meter Reading	Filter Effluen	Flow	Meter	Old Res.	New Res.	(mg/L)	
	884,316	(gal)	(gpm)	(gpm)	(NTU)	(deg. F)			(NTU)	(NTU)	(NTU)		583,695	(gal)	(gpm)	(gpm)	(ft)	(ft)		
1-Jun	884,615	299,000	207.6	220	1.735	36.0	15	yes	0.040	0.043	0.040	6.43	583,999	304,000	211.1	218.0	33.4	30.9	2.84	37
2-Jun	884,909	294,000	204.2	220	1.501	36.3	15	yes	0.040	0.044	0.042	6.49	584,302	303,000	210.4	218.0	33.7	31.1	2.69	46
3-Jun	885,208	299,000	207.6	220	1.372	36.7	15	yes	0.040	0.044	0.041	6.47	584,602	300,000	208.3	218.0	33.4	30.9	2.71	43
4-Jun	885,503	295,000	204.9	220	1.318	36.5	15	yes	0.042	0.047	0.044	6.46	584,897	295,000	204.9	218.0	33.1	30.6	2.82	40
5-Jun	885,800	297,000	206.3	220	1.110	36.9	15	yes	0.038	0.042	0.039	6.43	585,193	296,000	205.6	221.0	33.2	30.7	2.86	35
6-Jun	886,097	297,000	206.3	220	0.860	36.9	15	yes	0.043	0.043	0.043	6.43	585,492	299,000	207.6	222.0	33.4	30.8	2.81	49
7-Jun	886,393	296,000	205.6	220	0.796	37.2	15	yes	0.045	0.051	0.049	6.44	585,788	296,000	205.6	224.0	32.8	30.4	2.83	55
8-Jun	886,689	296,000	205.6	220	0.946	37.0	15	yes	0.041	0.039	0.039	6.46	586,087	299,000	207.6	213.0	32.4	30.0	2.97	46
9-Jun	886,985	296,000	205.6	220	2.531	37.6	15	yes	0.042	0.049	0.046	6.45	586,378	291,000	202.1	215.0	32.1	29.8	2.98	55
10-Jun	887,282	297,000	206.3	220	2.426	38.1	15	yes	0.039	0.039	0.038	6.46	586,679	301,000	209.0	217.0	31.0	29.0	2.67	47
11-Jun	887,577	295,000	204.9	220	2.753	38.3	15	yes	0.046	0.053	0.048	6.42	586,976	297,000	206.3	214.0	29.2	27.6	2.73	41
12-Jun	887,872	295,000	204.9	220	1.601	38.3	15	yes	0.058	0.075	0.065	6.34	587,272	296,000	205.6	215.0	28.5	27.1	2.88	38
13-Jun	888,220	348,000	241.7	220	1.477	39.2	15	yes	0.084	0.108	0.096	6.28	587,579	307,000	213.2	216.0	28.3	26.9	2.58	33
14-Jun	888,485	265,000	184.0	220	1.134	40.8	15	yes	0.064	0.097	0.081	6.49	587,875	296,000	205.6	213.0	27.7	26.5	2.17	38
15-Jun	888,785	300,000	208.3	225	1.031	41.7	15	yes	0.043	0.057	0.050	6.54	588,177	302,000	209.7	225.0	27.7	26.5	1.83	45
16-Jun	889,092	307,000	213.2	225	1.659	46.4	15	yes	0.038	0.043	0.040	6.53	588,490	313,000	217.4	219.0	27.9	26.7	1.73	45
17-Jun	889,403	311,000	216.0	225	8.055	47.8	15	yes	0.035	0.030	0.031	6.58	588,810	320,000	222.2	228.0	28.2	26.9	1.74	44
18-Jun	889,706	303,000	210.4	240	14.090	49.1	15	yes	0.067	0.030	0.031	6.59	589,117	307,000	213.2	227.0	28.0	26.7	1.75	54
19-Jun	890,020	314,000	218.1	240	1.399	51.8	15	yes	0.046	0.051	0.045	6.38	589,419	302,000	209.7	235.0	27.9	26.6	1.82	45
20-Jun	890,357	337,000	234.0	240	1.234	54.1	15	yes	0.037	0.037	0.035	6.36	589,741	322,000	223.6	230.0	27.6	26.4	1.85	43
21-Jun	890,681	324,000	225.0	250	1.190	55.2	15	yes	0.037	0.033	0.033	6.34	590,049	308,000	213.9	232.0	27.3	26.2	1.86	40
22-Jun	891,025	344,000	238.9	250	0.998	52.2	15	yes	0.036	0.029	0.030	6.39	590,386	337,000	234.0	242.0	27.9	26.6	1.76	42
23-Jun	891,369	344,000	238.9	250	0.929	52.9	15	yes	0.036	0.031	0.031	6.36	590,726	340,000	236.1	252.0	28.8	27.4	1.92	52
24-Jun	891,724	355,000	246.5	250	0.951	52.5	15	yes	0.037	0.034	0.033	6.36	591,060	334,000	231.9	248.0	29.7	28.0	1.63	56
25-Jun	892,058	334,000	231.9	250	0.966	55.9	15	yes	0.041	0.032	0.030	6.35	591,353	293,000	203.5	248.0	29.7	28.0	1.97	46
26-Jun	892,404	346,000	240.3	250	2.097	55.2	15	yes	0.033	0.033	0.031	6.41	591,682	329,000	228.5	246.0	30.7	28.8	1.55	42
27-Jun	892,750	346,000	240.3	250	1.816	55.0	15	yes	0.032	0.032	0.030	6.41	592,026	344,000	238.9	247.0	31.7	29.6	1.73	39
28-Jun	893,097	347,000	241.0	250	2.204	56.3	15	yes	0.033	0.033	0.031	6.40	592,370	344,000	238.9	243.0	32.8	30.4	2.18	54
29-Jun	893,432	335,000	232.6	250	1.762	57.6	15	yes	0.033	0.032	0.031	6.41	592,720	350,000	243.1	248.0	34.0	31.2	1.89	55
30-Jun	893,782	350,000	243.1	250	1.599	59.0	15	yes	0.033	0.033	0.032	6.40	593,069	349,000	242.4	243.0	35.1	32.1	2.14	53
														9374000						
TOTALS		9,466,000												312,467	217.0	228.5	30.6	28.7	2.26	45
AVERAGE		315,533.3	219.1	232.5	2.118	45.62			0.043	0.045	0.042	6.43		350000	243.1	252.0	35.1	32.1	2.98	56
MAXIMUM		355000	247	250	14.090	59.00			0.084	0.108	0.096	6.59		291000	202.1	213.0	27.3	26.2	1.55	33
MINIMUM		265000	184	220	0.796	36.30			0.032	0.029	0.030	6.28								

July 2007

Date	Raw							Static Mixer Flush	Filters				Filter Effluent						Cl-17	Outside Temperature
	Meter Reading	Raw Flow	Flow	Meter	Turb.	Temp.	DL Pump		#1	#2	Comb.	pH	Meter Reading	Filter Effluen	Flow	Meter	Old Res.	New Res.	(mg/L)	
	893,782	(gal)	(gpm)	(gpm)	(NTU)	(deg. F)			(NTU)	(NTU)	(NTU)		593,069	(gal)	(gpm)	(gpm)	(ft)	(ft)		
1-Jul	894,125	343,000	238.2	250	2.583	58.3	15	yes	0.032	0.033	0.032	6.44	593,416	347,000	241.0	247.0	36.2	33.0	1.82	48
2-Jul	894,469	344,000	238.9	250	2.618	59.0	15	yes	0.033	0.035	0.034	6.42	593,759	343,000	238.2	249.0	33.9	33.6	1.93	49
3-Jul	894,827	358,000	248.6	225	2.881	59.5	15	yes	0.035	0.038	0.037	6.44	594,116	357,000	247.9	243.0	35.2	34.5	2.21	48
4-Jul	895,136	309,000	214.6	225	2.465	60.8	15	yes	0.035	0.037	0.035	6.46	594,432	316,000	219.4	217.0	35.3	34.6	2.13	53
5-Jul	895,445	309,000	214.6	225	2.328	61.5	15	yes	0.035	0.037	0.036	6.46	594,740	308,000	213.9	218.0	35.8	35.0	2.11	54
6-Jul	895,711	266,000	184.7	200	2.438	61.2	15	yes	0.034	0.036	0.035	6.47	595,007	267,000	185.4	190.0	35.2	34.5	2.05	53
7-Jul	895,980	269,000	186.8	200	2.360	62.2	7.5	yes	0.035	0.038	0.037	6.49	595,280	273,000	189.6	194.0	34.7	34.2	1.75	57
8-Jul	896,250	270,000	187.5	200	1.447	62.8	7.5	yes	0.036	0.039	0.037	6.50	595,555	275,000	191.0	192.0	34.1	33.7	1.86	52
9-Jul	896,520	270,000	187.5	200	2.022	62.8	7.5	yes	0.038	0.040	0.038	6.50	595,824	269,000	186.8	187.0	33.3	33.0	1.96	53
10-Jul	896,787	267,000	185.4	200	2.447	61.7	7.5	yes	0.037	0.038	0.037	6.51	596,094	270,000	187.5	195.0	32.6	32.4	2.09	55
11-Jul	897,057	270,000	187.5	210	1.543	62.6	7.5	yes	0.036	0.036	0.035	6.40	596,365	271,000	188.2	192.0	31.9	31.9	1.86	55
12-Jul	897,342	285,000	197.9	210	1.000	63.3	7.5	yes	0.039	0.039	0.039	6.50	596,655	290,000	201.4	204.0	31.4	31.5	2.16	53
13-Jul	897,627	285,000	197.9	210	3.586	65.5	7.5	yes	0.041	0.040	0.040	6.50	596,941	286,000	198.6	191.0	31.0	31.2	1.72	64
14-Jul	897,913	286,000	198.6	210	3.957	66.7	7.5	yes	0.036	0.033	0.034	6.42	597,231	290,000	201.4	209.0	30.8	31.0	1.89	64
15-Jul	898,201	288,000	200.0	210	4.444	67.8	7.5	yes	0.036	0.034	0.035	6.41	597,523	292,000	202.8	208.0	30.3	30.6	1.86	59
16-Jul	898,482	281,000	195.1	210	4.969	66.2	7.5	yes	0.034	0.033	0.033	6.44	597,803	280,000	194.4	205.0	29.7	30.2	2.18	54
17-Jul	898,768	286,000	198.6	210	3.582	64.9	7.5	yes	0.034	0.033	0.033	6.49	598,091	288,000	200.0	210.0	29.3	29.9	2.46	57
18-Jul	899,054	286,000	198.6	210	3.402	64.4	7.5	yes	0.034	0.033	0.033	6.46	598,381	290,000	201.4	205.0	29.3	29.8	2.26	50
19-Jul	899,342	288,000	200.0	210	3.303	63.1	7.5	yes	0.032	0.033	0.032	6.49	598,671	290,000	201.4	200.0	29.3	29.8	2.22	51
20-Jul	899,625	283,000	196.5	210	4.658	62.4	7.5	yes	0.034	0.034	0.034	6.50	598,957	286,000	198.6	208.0	29.2	29.8		53
21-Jul	899,910	285,000	197.9	210	2.128	63.9	7.5	yes	0.036	0.036	0.035	6.50	599,239	282,000	195.8	213.0	29.3	29.9	2.94	58
22-Jul	900,199	289,000	200.7	210	1.817	63.9	7.5	yes	0.037	0.038	0.037	6.50	599,533	294,000	204.2	207.0	29.5	30.0	2.89	61
23-Jul	900,487	288,000	200.0	210	2.074	65.1	7.5	yes	0.039	0.041	0.039	6.50	599,802	269,000	186.8	201.0	29.3	29.9	2.94	59
24-Jul	900,789	302,000	209.7	210	2.758	64.9	7.5	yes		0.032	0.034	6.37	600,060	258,000	179.2	179.0	28.1	28.9	2.60	60
25-Jul	901,074	285,000	197.9	210	2.241	65.3	7.5	yes		0.032	0.030	6.38	600,282	222,000	154.2	171.0	27.4	28.3	2.71	61
26-Jul	901,370	296,000	205.6	210	2.978	66.0	7.5	yes		0.033	0.032	6.37	600,522	240,000	166.7	167.0	26.2	27.3	2.79	63
27-Jul	901,622	252,000	175.0	210	1.569	65.7	7.5	yes		0.034	0.032	6.39	600,756	234,000	162.5	175.0	25.1	26.4	2.82	54
28-Jul	901,900	278,000	193.1	150	1.973	64.4	7.5	yes	0.035	0.054	0.043	6.55	600,985	229,000	159.0	149.0	17.9	30.4	2.76	57
29-Jul	902,108	208,000	144.4	150	1.519	62.4	7.5	yes	0.031	0.046	0.035	6.55	601,176	191,000	132.6	130.0	11.8	35.1	2.79	53
30-Jul	902,372	264,000	183.3	210	1.336	62.1	7.5	yes	0.029	0.037	0.031	6.50	601,422	246,000	170.8	202.0		35.1	2.35	55
31-Jul	902,653	281,000	195.1	210	1.431	62.2	7.5	yes	0.030	0.038	0.033	6.51	601,705	283,000	196.5	202.0		35.0	3.04	54
TOTALS		8,871,000												8636000						
AVERAGE		286,161.3	198.7	208.5	2.576	63.31			0.035	0.037	0.035	6.47		278,581	193.5	198.7	30.1	31.6	2.31	55
MAXIMUM		358000	249	250	4.969	67.80			0.041	0.054	0.043	6.55		357000	247.9	249.0	36.2	35.1	3.04	64
MINIMUM		208000	144	150	1.000	59.00			0.029	0.032	0.030	6.37		191000	132.6	130.0	11.8	26.4	1.72	48

August 2007

Date	Raw							Static Mixer Flush	Filters				Filter Effluent						Cl-17	Temperature
	Meter Reading	Raw Flow	Flow	Meter	Turb.	Temp.	DL Pump		#1	#2	Comb.	pH	Meter Reading	Filter Effluen	Flow	Meter	Old Res.	New Res.	(mg/L)	Outside
	902,658	(gal)	(gpm)	(gpm)	(NTU)	(deg. F)			(NTU)	(NTU)	(NTU)		601,705	(gal)	(gpm)	(gpm)	(ft)	(ft)		
1-Aug	902,937	279,000	193.8	210	1.471	62.8	7.5	yes	0.031	0.039	0.034	6.52	601,989	284,000	197.2	201.0		35.1	2.61	53
2-Aug	903,219	282,000	195.8	210	1.753	64.4	7.5	yes	0.032	0.043	0.036	6.50	602,265	276,000	191.7	205.0	0.0	34.5	2.57	56
3-Aug	903,502	283,000	196.5	210	2.044	63.3	7.5	yes	0.034	0.045	0.040	6.51	602,545	280,000	194.4	205.0	0.0	34.8	2.57	57
4-Aug	903,784	282,000	195.8	210	1.580	63.0	7.5	yes	0.038	0.062	0.048	6.53	602,819	274,000	190.3	192.0	0.0	34.8	2.59	57
5-Aug	904,067	283,000	196.5	210	1.121	62.6	7.5	yes	0.036	0.055	0.044	6.51	603,091	272,000	188.9	200.0	0.0	34.9	2.57	59
6-Aug	904,349	282,000	195.8	210	1.321	61.9	7.5	yes	0.036	0.055	0.045	6.51	603,368	277,000	192.4	201.0	0.0	34.7	2.63	56
7-Aug	904,633	284,000	197.2	210	1.176	61.7	7.5	yes	0.048	0.074	0.058	6.58	603,642	274,000	190.3	205.0	0.0	34.3	2.63	53
8-Aug	904,914	281,000	195.1	210	1.032	61.2	7.5	yes	0.031	0.036	0.032	6.44	603,916	274,000	190.3	205.0	0.0	33.7	2.52	51
9-Aug	905,196	282,000	195.8	210	2.064	60.8	7.5	yes	0.028	0.034	0.029	6.39	604,188	272,000	188.9	200.0	0.0	32.9	2.59	51
10-Aug	905,476	280,000	194.4	210	2.451	61.2	7.5	yes	0.028	0.034	0.030	6.39	604,470	282,000	195.8	204.0	0.0	32.7	2.65	59
11-Aug	905,759	283,000	196.5	210	2.356	61.5	7.5	yes	0.028	0.035	0.030	6.45	604,753	283,000	196.5	205.0	0.0	33.1	2.20	58
12-Aug	906,042	283,000	196.5	210	3.794	61.0	7.5	yes	0.029	0.036	0.030	6.42	605,037	284,000	197.2	198.0	0.0	33.1	2.09	56
13-Aug	906,322	280,000	194.4	210	3.349	60.1	7.5	yes	0.030	0.037	0.031	6.42	605,312	275,000	191.0	209.0	0.0	32.6	2.22	53
14-Aug	906,603	281,000	195.1	210	2.934	59.9	7.5	yes	0.029	0.037	0.031	6.40	605,591	279,000	193.8	200.0	0.0	32.3	2.24	54
15-Aug	906,884	281,000	195.1	210	2.793	59.2	7.5	yes	0.030	0.037	0.030	6.40	605,873	282,000	195.8	211.0	0.0	31.7	1.90	54
16-Aug	907,165	281,000	195.1	210	2.808	59.0	7.5	yes	0.030	0.038	0.031	6.39	606,154	281,000	195.1	206.0	0.0	29.8	2.23	52
17-Aug	907,446	281,000	195.1	210	2.705	58.6	7.5	yes	0.031	0.039	0.032	6.37	606,436	282,000	195.8	205.0	0.0	29.5	2.03	56
18-Aug	907,728	282,000	195.8	210	2.658	59.5	7.5	yes	0.030	0.037	0.031	6.37	606,709	273,000	189.6	200.0	0.0	29.1	2.11	58
19-Aug	908,017	289,000	200.7	210	2.635	61.3	7.5	yes	0.030	0.038	0.031	6.37	606,995	286,000	198.6	204.0	0.0	29.2	1.81	60
20-Aug	908,294	277,000	192.4	210	2.586	63.1	7.5	yes	0.031	0.039	0.033	6.38	607,268	273,000	189.6	187.0	0.0	27.9	1.82	61
21-Aug	908,574	280,000	194.4	210	2.393	63.3	7.5	yes	0.030	0.036	0.031	6.37	607,544	276,000	191.7	194.0	0.0	27.6	1.79	58
22-Aug	908,857	283,000	196.5	220	2.802	62.1	7.5	yes	0.030	0.036	0.031	6.40	607,824	280,000	194.4	210.0	0.0	27.2	1.79	54
23-Aug	909,166	309,000	214.6	220	2.229	62.1	7.5	yes	0.031	0.036	0.031	6.37	608,132	308,000	213.9	220.0	0.0	28.0	1.89	57
24-Aug	909,474	308,000	213.9	220	1.932	62.2	7.5	yes	0.030	0.036	0.031	6.36	608,441	309,000	214.6	218.0	0.0	28.6	1.66	59
25-Aug	909,786	312,000	216.7	225	1.793	62.2	7.5	yes	0.037	0.051	0.041	6.40	608,747	306,000	212.5	219.0	0.0	29.2	1.81	56
26-Aug	910,095	309,000	214.6	225	1.805	61.7	7.5	yes	0.031	0.039	0.034	6.39	609,053	306,000	212.5	228.0	0.0	29.5	1.55	52
27-Aug	910,403	308,000	213.9	225	1.529	61.5	7.5	yes	0.032	0.039	0.033	6.39	609,358	305,000	211.8	227.0	0.0	29.7	1.78	52
28-Aug	910,713	310,000	215.3	225	1.294	61.5	7.5	yes	0.030	0.035	0.033	6.33	609,663	305,000	211.8	221.0	0.0	30.1	2.02	54
29-Aug	911,021	308,000	213.9	225	1.355	60.8	7.5	yes	0.030	0.035	0.030	6.30	609,972	309,000	214.6	221.0	0.0	30.7	2.09	53
30-Aug	911,330	309,000	214.6	225	1.244	59.5	7.5	yes	0.031	0.035	0.031	6.30	610,283	311,000	216.0	225.0	0.0	31.5	1.95	51
31-Aug	911,640	310,000	215.3	225	1.289	58.1	7.5	yes	0.031	0.034	0.032	6.31	610,593	310,000	215.3	215.0	0.0	32.2	1.98	51
TOTALS		8,982,000												8888000						
AVERAGE		289,741.9	201.2	214.4	2.074	61.33			0.032	0.041	0.034	6.41		286,710	199.1	207.8	0.0	31.5	2.16	55
MAXIMUM		312000	217	225	3.794	64.40			0.048	0.074	0.058	6.58		311000	216.0	228.0	0.0	35.1	2.65	61
MINIMUM		277000	192	210	1.032	58.10			0.028	0.034	0.029	6.30		272000	188.9	187.0	0.0	27.2	1.55	51

October 2007

Date	Raw							Static Mixer Flush	Filters				Filter Effluent						Cl-17	Temperature
	Meter Reading	Raw Flow	Flow	Meter	Turb.	Temp.	DL Pump		#1	#2	Comb.	pH	Meter Reading	Filter Effluen	Flow	Meter	Old Res.	New Res.	(mg/L)	Outside
	921,871	(gal)	(gpm)	(gpm)	(NTU)	(deg. F)			(NTU)	(NTU)	(NTU)		620,604	(gal)	(gpm)	(gpm)	(ft)	(ft)		
1-Oct	922,177	306,000	212.5	225	11.040	36.5	7.5	yes	0.030	0.033	0.031	6.31	620,905	301,000	209.0	228.0	37.2	20.2	1.29	53
2-Oct	922,488	311,000	216.0	225	8.760	36.9	7.5	yes	0.030	0.028	0.028	6.40	621,213	308,000	213.9	221.0	37.0	20.0	1.22	30
3-Oct	922,796	308,000	213.9	225	7.931	35.4	7.5	yes	0.031	0.030	0.029	6.43	621,523	310,000	215.3	222.0	34.9	21.9	1.05	26
4-Oct	923,103	307,000	213.2	225	7.794	34.7	7.5	yes	0.031	0.029	0.029	6.44	621,833	310,000	215.3	217.0	34.9	21.9	1.27	29
5-Oct	923,406	303,000	210.4	210	28.390	32.2	7.5	yes	0.032	0.034	0.032	6.42	622,141	308,000	213.9	209.0	32.0	24.3	1.20	26
6-Oct	923,713	307,000	213.2	230	17.400	31.8	7.5	yes	0.032	0.033	0.032	6.40	622,452	311,000	216.0	231.0	29.8	26.3	1.24	19
7-Oct	924,032	319,000	221.5	230	15.490	32.2	7.5	yes	0.029	0.032	0.030	6.36	622,773	321,000	222.9	237.0	28.3	27.6	1.23	20
8-Oct	924,352	320,000	222.2	230	12.170	33.3	7.5	yes	0.029	0.032	0.029	6.37	623,098	325,000	225.7	224.0	27.5	27.8	1.03	21
9-Oct	924,672	320,000	222.2	230	10.360	33.3	7.5	yes	0.029	0.032	0.030	6.36	623,417	319,000	221.5	229.0	27.5	27.8	1.05	26
10-Oct	924,992	320,000	222.2	230	8.970	33.6	7.5	yes	0.029	0.033	0.031	6.34	623,739	322,000	223.6	229.0	27.5	27.8	1.03	27
11-Oct	925,317	325,000	225.7	230	8.208	34.5	7.5	yes	0.029	0.033	0.031	6.36	624,063	324,000	225.0	233.0	27.6	27.8	1.19	22
12-Oct	925,577	260,000	180.6	175	5.750	34.2	7.5	yes	0.029	0.032	0.029	6.39	624,324	261,000	181.3	209.0	26.6	27.0	1.18	17
13-Oct	925,831	254,000	176.4	175	4.031	34.0	7.5	yes	0.030	0.037	0.032	6.40	624,578	254,000	176.4	174.0	25.8	26.3	1.13	15
14-Oct	926,074	243,000	168.8	175	3.403	34.5	7.5	yes	0.029	0.033	0.030	6.42	624,818	240,000	166.7	172.0	28.0	23.4	1.11	24
15-Oct	926,305	231,000	160.4	175	3.375	35.2	7.5	yes	0.030	0.034	0.031	6.42	625,053	235,000	163.2	183.0	29.9	20.2	1.04	23
16-Oct	926,544	239,000	166.0	175	2.565	35.2	7.5	yes	0.029	0.034	0.030	6.43	625,292	239,000	166.0	178.0	32.4	17.0	1.16	24
17-Oct	926,789	245,000	170.1	175	3.908	35.6	7.5	yes	0.028	0.032	0.029	6.42	625,542	250,000	173.6	175.0	35.4		1.17	27
18-Oct	927,027	238,000	165.3	150	3.449	34.9	7.5	yes	0.029	0.033	0.030	6.43	625,784	242,000	168.1	155.0	36.7	7.0	2.13	19
19-Oct	927,289	262,000	181.9	205	2.431	35.6	7.5	yes	0.030	0.034	0.031	6.38	626,046	262,000	181.9	201.0	36.1	1.9	1.33	16
20-Oct	927,566	277,000	192.4	205	1.415	35.2	7.5	yes	0.030	0.034	0.031	6.39	626,328	282,000	195.8	205.0	28.6	6.3	1.33	21
21-Oct	927,844	278,000	193.1	205	1.561	35.6	7.5	yes	0.029	0.033	0.030	6.39	626,605	277,000	192.4	198.0	28.2	6.4	1.35	21
22-Oct	928,123	279,000	193.8	205	2.318	36.5	7.5	yes	0.030	0.033	0.031	6.40	626,886	281,000	195.1	185.0	25.6	7.7	1.25	18
23-Oct	928,477	354,000	245.8	270	2.927	36.5	7.5	yes	0.036	0.035	0.035	6.42	627,235	349,000	242.4	263.0	14.1	17.8	1.12	8
24-Oct	928,836	359,000	249.3	260	1.955	36.7	7.5	yes	0.041	0.037	0.039	6.44	627,590	355,000	246.5	253.0	13.2	19.5	1.41	10
25-Oct	929,198	362,000	251.4	260	1.928	36.7	7.5	yes	0.032	0.034	0.034	6.42	627,954	364,000	252.8	238.0	14.2	20.8	1.22	14
26-Oct	929,555	357,000	247.9	260	1.818	36.1	7.5	yes	0.034	0.034	0.034	6.41	628,308	354,000	245.8	258.0	14.3	21.7	1.51	23
27-Oct	929,931	376,000	261.1	275	2.132	36.7	7.5	yes	0.031	0.031	0.033	6.37	628,684	376,000	261.1	275.0	16.1	22.8	1.45	28
28-Oct	930,301	370,000	256.9	275	2.253	36.3	7.5	yes	0.033	0.034	0.035	6.41	629,054	370,000	256.9	266.0	17.2	24.0	1.54	24
29-Oct	930,676	375,000	260.4	275	2.553	36.7	7.5	yes	0.202	0.037	0.037	6.40	629,420	366,000	254.2	299.0	16.6	24.9	1.41	25
30-Oct	931,052	376,000	261.1	275	2.406	36.5	7.5	yes	0.031	0.032	0.032	6.39	629,798	378,000	262.5	268.0	17.4	26.4	1.36	14
31-Oct	931,427	375,000	260.4	275	2.511	36.7	7.5	yes	0.032	0.035	0.035	6.42	630,166	368,000	255.6	263.0	17.2	27.4	1.39	8
TOTALS		9,556,000												9562000						
AVERAGE		308,258.1	214.1	223.7	6.168	35.15			0.036	0.033	0.032	6.40		308,452	214.2	222.5	26.4	20.7	1.27	22
MAXIMUM		376000	261	275	28.390	36.90			0.202	0.037	0.039	6.44		378000	262.5	299.0	37.2	27.8	2.13	53
MINIMUM		231000	160	150	1.415	31.80			0.028	0.028	0.028	6.34		235000	163.2	155.0	13.2	1.9	1.03	8

November

Date	Raw							Static Mixer Flush	Filters				Filter Effluent						Cl-17	Temperature
	Meter Reading	Raw Flow	Flow	Meter	Turb.	Temp.	DL Pump		#1	#2	Comb.	pH	Meter Reading	Filter Effluen	Flow	Meter	Old Res.	New Res.	(mg/L)	Outside
	931,427	(gal)	(gpm)	(gpm)	(NTU)	(deg. F)			(NTU)	(NTU)	(NTU)		630,166	(gal)	(gpm)	(gpm)	(ft)	(ft)		
1-Nov	931,803	376,000	261.1	275	2.551	36.7	7.5	yes	0.032	0.035	0.035	6.41	630,538	372,000	258.3	265.0	17.7	28.1	1.57	21
2-Nov	932,085	282,000	195.8	205	2.295	36.5	7.5	yes	0.031	0.038	0.037	6.45	630,824	286,000	198.6	197.0	8.7	34.7	1.71	14
3-Nov	932,362	277,000	192.4	200	2.318	36.3	7.5	yes	0.034	0.040	0.037	6.47	631,096	272,000	188.9	201.0	10.6	36.7	1.64	9
4-Nov	932,617	255,000	177.1	175	2.182	37.0	7.5	yes	0.032	0.041	0.036	6.46	631,346	250,000	173.6	175.0	11.2	34.9	0.47	21
5-Nov	932,860	243,000	168.8	175	1.783	36.1	7.5	yes	0.030	0.037	0.027	6.41	631,586	240,000	166.7	178.0	11.7	32.8	1.12	10
6-Nov	933,103	243,000	168.8	175	1.750	36.9	7.5	yes	0.030	0.036	0.027	6.41	631,833	247,000	171.5	179.0	6.7	34.4	0.96	9
7-Nov	933,348	245,000	170.1	175	1.768	35.8	7.5	yes	0.032	0.039	0.028	6.42	632,079	246,000	170.8	171.0	3.7	35.4	1.04	3
8-Nov	933,590	242,000	168.1	175	1.733	37.0	7.5	yes	0.030	0.037	0.025	6.40	632,319	240,000	166.7	175.0	2.3	34.1	0.97	15
9-Nov	933,859	269,000	186.8	198	1.744	36.5	7.5	yes	0.031	0.039	0.021	6.41	632,592	273,000	189.6	200.0	1.0	33.7	1.04	19
10-Nov	934,147	288,000	200.0	210	1.748	35.4	7.5	yes	0.032	0.039	0.023	6.38	632,883	291,000	202.1	208.0	0.0	33.7	1.32	22
11-Nov	934,433	286,000	198.6	210	1.697	36.3	7.5	yes	0.033	0.040	0.027	6.41	633,167	284,000	197.2	207.0	0.0	33.7	1.39	17
12-Nov	934,721	288,000	200.0	210	1.678	36.5	7.5	yes	0.032	0.040	0.023	6.40	633,457	290,000	201.4	212.0	0.0	33.2	1.74	15
13-Nov	935,008	287,000	199.3	210	1.682	36.9	7.5	yes	0.031	0.040	0.023	6.40	633,746	289,000	200.7	207.0	0.0	32.8	1.59	11
14-Nov	935,359	351,000	243.8	275	1.759	36.0	7.5	yes	0.051	0.040	0.030	6.37	634,096	350,000	243.1	275.0	5.5	26.7	1.91	2
15-Nov	935,736	377,000	261.8	275	1.729	36.1	7.5	yes	0.034	0.038	0.023	6.35	634,472	376,000	261.1	266.0	15.1	19.4	2.68	0
16-Nov	936,111	375,000	260.4	275	1.705	36.7	7.5	yes	0.034	0.041	0.024	6.37	634,847	375,000	260.4	268.0	18.2	17.5	2.63	4
17-Nov	936,486	375,000	260.4	275	1.725	36.0	7.5	yes	0.037	0.044	0.027	6.37	635,220	373,000	259.0	268.0	20.0	17.4	2.66	4
18-Nov	936,831	345,000	239.6	275	1.581	35.4	7.5	yes	0.038	0.046	0.003	6.38	635,583	363,000	252.1	271.0	21.3	17.5	2.42	0
19-Nov	937,234	403,000	279.9	275	1.405	36.0	7.5	yes	0.037	0.047	0.029	6.36	635,946	363,000	252.1	268.0	22.5	17.2	2.39	2
20-Nov	937,609	375,000	260.4	275	1.718	36.3	7.5	yes	0.037	0.048	0.030	6.37	636,315	369,000	256.3	266.0	24.8	17.8	2.43	3
21-Nov	937,882	273,000	189.6	275	1.741	36.5	7.5	yes	0.037	0.046	0.028	6.34	636,673	358,000	248.6	266.0	25.7	18.2	1.24	29
22-Nov	938,359	477,000	331.3	275	1.613	36.9	7.5	yes	0.043	0.053	0.033	6.35	637,033	360,000	250.0	268.0	26.5	19.1	1.18	26
23-Nov	938,734	375,000	260.4	275	1.853	36.1	7.5	yes	0.140	0.047	0.065	6.40	637,398	365,000	253.5	282.0	27.4	19.8	1.42	32
24-Nov	939,109	375,000	260.4	275	2.119	36.9	7.5	yes	0.038	0.046	0.027	6.33	637,769	371,000	257.6	276.0	28.4	21.1	1.51	27
25-Nov	939,482	373,000	259.0	275	3.688	36.0	7.5	yes	0.039	0.046	0.027	6.34	638,132	363,000	252.1	270.0	29.4	22.3	1.50	23
26-Nov	939,857	375,000	260.4	275	2.958	36.9	7.5	yes	0.040	0.048	0.026	6.34	638,481	349,000	242.4	270.0	30.2	22.4	1.73	22
27-Nov	940,234	377,000	261.8	275	4.738	36.5	7.5	yes	0.079	0.099	0.053	6.33	638,842	361,000	250.7	268.0	31.1	23.2	1.73	15
28-Nov	940,603	369,000	256.3	275	3.948	36.3	7.5	yes	0.035	0.042	0.020	6.34	639,202	360,000	250.0	270.0	31.8	23.9	1.65	12
29-Nov	940,982	379,000	263.2	275	4.525	36.3	7.5	yes	0.035	0.043	0.023	6.35	639,565	363,000	252.1	265.0	32.8	25.1	1.62	22
30-Nov	941,350	368,000	255.6	275	4.599	36.5	7.5	yes	0.036	0.044	0.029	6.34	639,921	356,000	247.2	268.0	33.6	25.9	1.67	32
TOTALS		9,923,000												9755000						
AVERAGE		330,766.7	229.7	242.3	2.278	36.38			0.040	0.044	0.029	6.38		325,167	225.8	238.7	16.6	26.4	1.63	15
MAXIMUM		477000	331	275	4.738	37.00			0.140	0.099	0.065	6.47		376000	261.1	282.0	33.6	36.7	2.68	32
MINIMUM		242000	168	175	1.405	35.40			0.030	0.036	0.003	6.33		240000	166.7	171.0	0.0	17.2	0.47	0

December 2007

Date	Raw							Static Mixer Flush	Filters				Filter Effluent						Cl-17	Outside Temperature
	Meter Reading	Raw Flow	Flow	Meter	Turb.	Temp.	DL Pump		#1	#2	Comb.	pH	Meter Reading	Filter Effluen	Flow	Meter	Old Res.	New Res.	(mg/L)	
	941,350	(gal)	(gpm)	(gpm)	(NTU)	(deg. F)			(NTU)	(NTU)	(NTU)		639,921	(gal)	(gpm)	(gpm)	(ft)	(ft)		
1-Dec	941,727	377,000	261.8	275	2.908	36.0	7.5	yes	0.033	0.040	0.025	6.34	640,287	366,000	254.2	264.0	34.6	27.3	1.68	30
2-Dec	942,099	372,000	258.3	275	2.532	36.3	7.5	yes	0.034	0.039	0.025	6.32	640,650	363,000	252.1	267.0	35.6	28.3	1.60	14
3-Dec	942,471	372,000	258.3	275	2.058	36.0	7.5	yes	0.034	0.042	0.025	6.32	641,010	360,000	250.0	267.0	36.4	28.7	1.63	9
4-Dec	942,775	304,000	211.1	210	4.277	35.4	7.5	yes	0.035	0.046	0.028	6.37	641,207	197,000	136.8	206.0	31.5	31.6	1.41	-5
5-Dec	943,057	282,000	195.8	210	6.633	35.6	7.5	yes	0.030	0.036	0.022	6.35	641,488	281,000	195.1	205.0	31.6	31.8	1.75	7
6-Dec	943,345	288,000	200.0	210	7.336	36.0	7.5	yes	0.032	0.037	0.022	6.35	641,777	289,000	200.7	209.0	31.7	31.9	1.77	23
7-Dec	943,629	284,000	197.2	210	10.520	36.0	7.5	yes	0.032	0.038	0.022	6.36	642,062	285,000	197.9	207.0	31.9	32.0	1.72	31
8-Dec	943,917	288,000	200.0	210	11.390	36.1	7.5	yes	0.032	0.040	0.024	6.37	642,350	288,000	200.0	209.0	32.0	32.1	1.71	22
9-Dec	944,202	285,000	197.9	210			7.5	yes					642,633	283,000	196.5					
10-Dec	944,486	284,000	197.2	210	9.718	36.3	7.5	yes	0.031	0.042	0.024	6.34	642,915	282,000	195.8	208.0	30.7	30.8	1.61	20
11-Dec	944,772	286,000	198.6	210	7.432	36.1	7.5	yes	0.032	0.042	0.260	6.37	643,197	282,000	195.8	205.0	30.7	30.8	1.75	22
12-Dec	945,054	282,000	195.8	210	6.587	35.8	7.5	yes	0.033	0.044	0.030	6.38	643,480	283,000	196.5	205.0	30.5	30.8	1.88	24
13-Dec	945,340	286,000	198.6	210	6.822	36.0	7.5	yes	0.032	0.046	0.026	6.39	643,763	283,000	196.5	210.0	30.5	30.7	1.89	8
14-Dec	945,625	285,000	197.9	210	1.040	36.1	7.5	yes	0.038	0.049	0.039	6.38	644,045	282,000	195.8	209.0	30.5	30.7	2.06	11
15-Dec	945,909	284,000	197.2	210	1.053	35.8	7.5	yes	0.039	0.049	0.040	6.38	644,324	279,000	193.8	208.0	30.6	30.8	2.05	18
16-Dec	946,195	286,000	198.6	210	1.050	35.4	7.5	yes	0.040	0.055	0.043	6.40	644,605	281,000	195.1	206.0	30.6	30.8	2.00	-3
17-Dec	946,478	283,000	196.5	210	1.052	35.6	7.5	yes	0.041	0.057	0.045	6.41	644,880	275,000	191.0	206.0	30.2	30.4	2.02	-6
18-Dec	946,761	283,000	196.5	210	1.092	35.2	7.5	yes	0.039	0.050	0.041	6.38	645,152	272,000	188.9	209.0	29.8	30.0	2.01	-18
19-Dec	947,042	281,000	195.1	220	1.119	35.8	7.5	yes	0.040	0.051	0.041	6.39	645,427	275,000	191.0	209.0	29.5	29.8	2.43	-17
20-Dec	947,353	311,000	216.0	220	1.137	35.2	7.5	yes	0.041	0.049	0.042	6.39	645,731	304,000	211.1	219.0	29.8	29.9	2.41	-33
21-Dec	947,656	303,000	210.4	220	1.101	35.6	7.5	yes	0.043	0.051	0.042	6.38	646,019	288,000	200.0	217.0	29.3	29.5	2.46	-33
22-Dec	947,961	305,000	211.8	220	1.055	35.6	7.5	yes	0.040	0.044	0.038	6.36	646,319	300,000	208.3	215.0	29.2	29.4	2.32	-16
23-Dec	948,263	302,000	209.7	220	1.054	35.8	7.5	yes	0.043	0.049	0.041	6.36	646,616	297,000	206.3	223.0	28.5	28.7	2.51	13
24-Dec	948,572	309,000	214.6	220	1.010	35.8	7.5	yes	0.043	0.048	0.040	6.35	646,919	303,000	210.4	219.0	27.9	28.2	2.58	2
25-Dec	948,875	303,000	210.4	220	0.987	35.8	7.5	yes	0.047	0.053	0.045	6.37	647,211	292,000	202.8	215.0	27.4	27.6	2.66	-13
26-Dec	949,177	302,000	209.7	220	1.002	35.6	7.5	yes	0.050	0.054	0.046	6.37	647,497	286,000	198.6	197.0	26.9	27.1	2.89	2
27-Dec	949,507	330,000	229.2	240	1.029	35.8	7.5	yes	0.044	0.049	0.040	6.33	647,814	317,000	220.1	227.0	26.6	26.9	2.50	-1
28-Dec	949,832	325,000	225.7	240	1.425	36.1	7.5	yes	0.053	0.056	0.094	6.32	648,120	306,000	212.5	204.0	26.5	26.7	1.75	11
29-Dec	950,173	341,000	236.8	250	1.367	36.1	7.5	yes	0.049	0.053	0.043	6.29	648,441	321,000	222.9	275.0	26.7	27.0	1.62	10
30-Dec	950,516	343,000	238.2	250	1.363	36.1	7.5	yes	0.051	0.055	0.046	6.30	648,764	323,000	224.3	270.0	27.1	27.3	2.12	11
31-Dec	950,857	341,000	236.8	250	1.359	35.8	7.5	yes	0.048	0.053	0.043	6.28	649,086	322,000	223.6	249.0	27.3	27.5	2.03	2
TOTALS		9,507,000												9165000						
AVERAGE		306,677.4	213.0	224.7	3.284	35.83			0.039	0.047	0.045	6.36		295,645	205.3	221.3	30.1	29.5	2.03	5
MAXIMUM		377000	262	275	11.390	36.30			0.053	0.057	0.260	6.41		366000	254.2	275.0	36.4	32.1	2.89	31
MINIMUM		281000	195	210	0.987	35.20			0.030	0.036	0.022	6.28		197000	136.8	197.0	26.5	26.7	1.41	-33

January 2008

Date	Raw							Static Mixer Flush	Filters				Filter Effluent						CI-17	Temperature
	Meter Reading	Raw Flow	Flow	Meter	Turb.	Temp.	DL Pump		#1	#2	Comb.	pH	Meter Reading	Filter Effluen	Flow	Meter	Old Res.	New Res.	(mg/L)	Outside
	950,857	(gal)	(gpm)	(gpm)	(NTU)	(deg. F)			(NTU)	(NTU)	(NTU)		649,086	(gal)	(gpm)	(gpm)	(ft)	(ft)		
1	951,206	349,000	242.4	250	1.323	35.6	7.5	yes	0.048	0.056	0.045	6.29	649,425	339,000	235.4	275.0	27.8	28.1	2.09	-12
2	951,550	344,000	238.9	250	1.264	35.2	7.5	yes	0.044	0.059	0.050	6.30	649,757	332,000	230.6	259.0	28.2	28.4	2.42	-24
3	951,888	338,000	234.7	250	1.291	35.4	7.5	yes	0.040	0.054	0.043	6.27	650,085	328,000	227.8	262.0	28.4	28.7	2.17	-16
4	952,221	333,000	231.3	240	1.276	34.7	7.5	yes	0.037	0.055	0.023	6.28	650,405	320,000	222.2	220.0	28.7	28.9	2.17	-19
5	952,587	366,000	254.2	275	1.344	35.4	7.5	yes	0.047	0.057	0.029	6.23	650,693	288,000	200.0	242.0	28.3	28.6	2.20	-21
6	952,952	365,000	253.5	275	1.231	35.2	7.5	yes	0.041	0.052	0.027	6.23	651,028	335,000	232.6	251.0	28.4	28.6	2.18	-16
7	953,315	363,000	252.1	270	1.058	35.2	7.5	yes	0.044	0.075	0.036	6.23	651,367	339,000	235.4	262.0	28.3	28.5	2.25	-9
8	953,647	332,000	230.6	240	1.321	34.7	7.5	yes	0.036	0.173	0.058	6.35	651,676	309,000	214.6	240.0	28.2	28.4	2.08	-18
9	953,953	306,000	212.5	230	1.275	34.5	7.5	yes	0.042	0.049	0.031	6.32	651,991	315,000	218.8	220.0	28.5	28.7	1.90	-17
10	954,275	322,000	223.6	230	1.658	34.7	7.5	yes	0.035	0.049	0.019	6.33	652,305	314,000	218.1	247.0	28.5	28.7	1.96	-14
11	954,593	318,000	220.8	230	1.382	34.9	7.5	yes	0.041	0.051	0.021	6.33	652,618	313,000	217.4	100.0	28.3	28.5	2.00	-18
12	954,912	319,000	221.5	230	1.329	34.0	7.5	yes	0.042	0.055	0.024	6.34	652,930	312,000	216.7	227.0	28.5	28.7	1.62	-28
13	955,233	321,000	222.9	230	1.320	34.0	7.5	yes	0.043	0.056	0.021	6.35	653,242	312,000	216.7	252.0	28.5	28.7	1.86	-31
14	955,551	318,000	220.8	230	1.287	34.0	7.5	yes	0.039	0.050	0.020	6.34	653,554	312,000	216.7	232.0	28.3	28.5	2.08	-39
15	955,871	320,000	222.2	235	1.318	34.2	7.5	yes	0.041	0.052	0.022	6.35	653,870	316,000	219.4	230.0	28.3	28.5	2.16	-33
16	956,181	310,000	215.3	240	1.281	34.5	7.5	yes	0.041	0.051	0.022	6.34	654,174	304,000	211.1	221.0	28.0	27.8	2.08	5
17	956,523	342,000	237.5	250	1.388	34.2	7.5	yes	0.038	0.055	0.020	6.36	654,506	332,000	230.6	268.0	27.6	27.8	2.10	-11
18	956,863	340,000	236.1	250	1.367	34.7	7.5	yes	0.040	0.060	0.022	6.31	654,835	329,000	228.5	286.0	27.6	27.9	2.07	15
19	957,217	354,000	245.8	255	1.475	35.1	7.5	yes	0.046	0.062	0.030	6.28	655,156	321,000	222.9	249.0	27.6	27.7	1.93	20
20	957,571	354,000	245.8	270	2.186	36.0	7.5	yes	0.039	0.239	0.034	6.31	655,466	310,000	215.3	112.0	27.3	27.5	1.72	30
21	957,937	366,000	254.2	270	2.603	36.0	7.5	yes	0.051	0.071	0.047	6.30	655,810	344,000	238.9	258.0	27.5	27.7	1.54	19
22	958,299	362,000	251.4	270	2.787	36.0	7.5	yes	0.045	0.057	0.041	6.29	656,157	347,000	241.0	262.0	27.8	28.0	1.99	32
23	958,653	354,000	245.8	270	2.834	35.2	7.5	yes	0.047	0.057	0.041	6.32	656,493	336,000	233.3	256.0	27.8	27.9	2.19	-16
24	959,013	360,000	250.0	260	2.239	34.5	7.5	yes	0.052	0.073	0.054	6.34	656,827	334,000	231.9	253.0	27.7	27.9	2.27	-24
25	959,366	353,000	245.1	270	2.169	34.5	7.5	yes	0.040	0.073	0.054	6.32	657,162	335,000	232.6	279.0	27.6	27.9	2.31	-20
26	959,776	410,000	284.7	300	3.058	35.8	15	yes	0.050	0.078	0.061	6.33	657,515	353,000	245.1	292.0	27.8	28.0	2.01	-26
27	960,178	402,000	279.2	300	3.153	35.6	15	yes	0.049	0.316	0.045	6.33	657,870	355,000	246.5	160.0	27.4	27.6	2.17	-2
28	960,583	405,000	281.3	300	4.500	35.2	15	yes	0.050	0.072	0.053	6.32	658,242	372,000	258.3	291.0	27.6	27.8	2.09	3
29	960,984	401,000	278.5	325	3.026	35.1	15	yes	0.053	0.079	0.066	6.32	658,530	288,000	200.0	301.0	26.5	26.8	2.10	4
30	961,433	449,000	311.8	325	2.907	35.2	15	yes	0.055	0.081	0.069	6.30	658,945	415,000	288.2	317.0	27.0	27.2	2.01	3
31	961,873	440,000	305.6	325	2.986	35.6	15	yes	0.058	0.083	0.063	6.31	659,348	403,000	279.9	316.0	27.5	27.7	1.88	-4
TOTALS		#####												######						
AVERAGE		######	246.8	262.7	1.924	35.00			0.044	0.079	0.038	6.31		331,032	229.9	246.5	27.9	28.1	2.05	-9
MAXIMUM		449000	312	325	4.500	36.00			0.058	0.316	0.069	6.36		415000	288.2	317.0	28.7	28.9	2.42	32
MINIMUM		306000	213	230	1.058	34.00			0.035	0.049	0.019	6.23		288000	200.0	100.0	26.5	26.8	1.54	-39

February 2008

Date	Raw							Static Mixer Flush	Filters				Filter Effluent						Cl-17	Temperature
	Meter Reading	Raw Flow	Flow	Meter	Turb.	Temp.	DL Pump		#1	#2	Comb.	pH	Meter Reading	Filter Effluen	Flow	Meter	Old Res.	New Res.	(mg/L)	Outside
	961,873	(gal)	(gpm)	(gpm)	(NTU)	(deg. F)			(NTU)	(NTU)	(NTU)		659,348	(gal)	(gpm)	(gpm)	(ft)	(ft)		
1	962,312	439,000	304.9	325	2.871	35.2	15	yes	0.059	0.090	0.067	6.35	659,748	400,000	277.8	317.0	27.9	28.1	1.93	-20
2	962,741	429,000	297.9	320	3.055	35.2	15	yes	0.061	0.088	0.066	6.34	660,134	386,000	268.1	306.0	28.6	28.8	1.87	-28
3	963,169	428,000	297.2	320	3.016	34.9	15	yes	0.050	0.231	0.117	6.36	660,522	388,000	269.4	304.0	28.9	29.1	2.32	-29
4	963,596	427,000	296.5	320	2.951	34.7	15	yes	0.057	0.085	0.060	6.31	660,931	409,000	284.0	305.0	29.6	29.8	1.92	-28
5	964,020	424,000	294.4	320	3.115	34.7	15	yes	0.056	0.085	0.057	6.33	661,316	385,000	267.4	300.0	29.6	29.8	2.21	-29
6	964,449	429,000	297.9	320	3.170	34.2	15	yes	0.052	0.079	0.051	6.35	661,711	395,000	274.3	304.0	29.8	29.9	2.13	-31
7	964,884	435,000	302.1	320	3.175	35.1	15	yes	0.054	0.082	0.053	6.35	662,101	390,000	270.8	306.0	30.1	30.3	2.14	-28
8	965,314	430,000	298.6	320	3.394	34.7	15	yes	0.052	0.081	0.069	6.34	662,496	395,000	274.3	309.0	30.4	30.5	1.97	-29
9	965,722	408,000	283.3	320	4.180	35.1	15	yes	0.052	0.072	0.054	6.35	662,878	382,000	265.3	309.0	30.9	31.0	2.03	-22
10	966,155	433,000	300.7	320	4.413	35.1	15	yes	0.052	0.077	0.059	6.33	663,193	315,000	218.8	308.0	30.3	30.5	1.88	-23
11	966,501	346,000	240.3	160	2.251	33.6	7.5	yes		0.074	0.056	6.48	663,480	287,000	199.3	156.0	29.6	29.7	2.68	-4
12	966,832	331,000	229.9	250	4.318	34.9	7.5	yes	0.056	0.113	0.091	6.45	663,793	313,000	217.4	240.0	29.5	29.7	1.86	-9
13	967,171	339,000	235.4	250	4.706	34.9	7.5	yes	0.496	0.082	0.061	6.40	664,109	316,000	219.4	133.0	29.4	29.6	2.51	-23
14	967,512	341,000	236.8	240	5.042	35.1	7.5	yes	0.067	0.125	0.083	6.41	664,425	316,000	219.4	233.0	29.7	29.9	2.44	6
15	967,836	324,000	225.0	240	4.208	35.2	7.5	yes	0.054	0.073	0.053	6.41	664,742	317,000	220.1	268.0	29.7	29.9	2.33	-8
16	968,158	322,000	223.6	240	4.465	34.2	7.5	yes	0.044	0.073	0.052	6.38	665,056	314,000	218.1	235.0			2.61	-20
17	968,462	304,000	211.1	199	6.269	37.8	7.5	yes	0.035	0.061	0.036	6.32	665,368	312,000	216.7	177.0	30.1	30.2	3.17	5
18	968,715	253,000	175.7	240	6.592	35.1	15	yes	0.036	0.068	0.049	6.30	665,613	245,000	170.1	164.0	29.1	29.3	3.30	12
19	969,050	335,000	232.6	240	7.524	33.8	15	yes	0.046	0.062	0.041	6.37	665,825	212,000	147.2	244.0	27.8	28.0	1.87	5
20	969,386	336,000	233.3	240	5.971	34.7	15	yes	0.049	0.066	0.044	6.38	666,146	321,000	222.9	259.0	27.8	28.0	2.42	30
21	969,716	330,000	229.2	240	5.773	34.5	15	yes	0.046	0.058	0.039	6.36	666,457	311,000	216.0	264.0	27.9	28.1	2.65	0
22	970,044	328,000	227.8	245	5.125	34.0	15	yes	0.055	0.069	0.046	6.35	666,788	331,000	229.9	289.0	28.4	28.6	2.78	-10
23	970,376	332,000	230.6	240	5.624	34.9	15	yes	0.054	0.082	0.052	6.33	667,124	336,000	233.3	241.0	28.8	29.0	2.70	-23
24	970,707	331,000	229.9	245	5.852	35.2	15	yes	0.046	0.072	0.044	6.35	667,445	321,000	222.9	242.0	29.0	29.2	2.53	-18
25	971,039	332,000	230.6	245	6.172	34.9	15	yes	0.056	0.066	0.049	6.35	667,771	326,000	226.4	243.0	29.0	29.3	2.43	-10
26	971,364	325,000	225.7	245	6.804	35.2	15	yes	0.050	0.071	0.043	6.34	668,102	331,000	229.9	243.0	29.4	29.6	2.40	-22
27	971,696	332,000	230.6	245	7.347	34.5	15	yes	0.044	0.060	0.037	6.35	668,431	329,000	228.5	279.0	29.7	29.9	2.40	-20
28	972,029	333,000	231.3	245	9.106	34.9	15	yes	0.049	0.057	0.035	6.34	668,762	331,000	229.9	259.0	29.9	30.1	2.39	-17
29	972,357	328,000	227.8	245	8.906	35.1	15	yes	0.051	0.059	0.042	6.34	669,087	325,000	225.7	275.0	30.2	30.4	2.20	-1
30																				
31																				
TOTALS	#####													9739000						
AVERAGE	######		251.1	265.5	5.014	34.88			0.067	0.081	0.055	6.36		335,828	233.2	259.0	29.3	29.5	2.35	-14
MAXIMUM	439000		305	325	9.106	37.80			0.496	0.231	0.117	6.48		409000	284.0	317.0	30.9	31.0	3.30	30
MINIMUM	253000		176	160	2.251	33.60			0.035	0.057	0.035	6.30		212000	147.2	133.0	27.8	28.0	1.86	-31

March 2008

Date	Raw							Static Mixer Flush	Filters				Filter Effluent						Cl-17	Temperature
	Meter Reading	Raw Flow	Flow	Meter	Turb.	Temp.	DL Pump		#1	#2	Comb.	pH	Meter Reading	Filter Effluen	Flow	Meter	Old Res.	New Res.	(mg/L)	Outside
	972,357	(gal)	(gpm)	(gpm)	(NTU)	(deg. F)			(NTU)	(NTU)	(NTU)		669,087	(gal)	(gpm)	(gpm)	(ft)	(ft)		
1	972,688	331,000	229.9	240	8.534	33.8	15	yes	0.059	0.068	0.047	6.35	669,419	332,000	230.6	272.0	30.8	31.0	2.19	-13
2	973,015	327,000	227.1	240	7.219	34.0	15	yes	0.049	0.072	0.054	6.37	669,729	310,000	215.3	286.0	31.3	31.4	2.23	-20
3	973,339	324,000	225.0	240	6.771	33.8	15	yes	0.063	0.076	0.061	6.37	670,039	310,000	215.3	277.0	31.4	31.5	2.13	-13
4	973,667	328,000	227.8	240	6.485	34.5	15	yes	0.108	0.186	0.157	6.34	670,371	332,000	230.6	170.0	31.8	31.9	2.23	14
5	973,971	304,000	211.1	220	8.051	34.2	15	yes	0.044	0.076	0.057	6.37	670,678	307,000	213.2	173.0	32.0	32.2	2.76	17
6	974,272	301,000	209.0	220	9.330	34.2	15	yes	0.047	0.080	0.055	6.39	670,984	306,000	212.5	260.0	32.1	32.2	2.48	18
7	974,572	300,000	208.3	220	6.861	34.2	15	yes	0.050	0.079	0.085	6.37	671,284	300,000	208.3	299.0	32.0	32.0	2.29	11
8	974,874	302,000	209.7	220	8.271	34.0	15	yes	0.051	0.078	0.064	6.39	671,579	295,000	204.9	290.0	32.1	32.4	2.36	14
9	975,159	285,000	197.9	220	10.070	34.0	15	yes	0.054	0.096	0.077	6.38	671,867	288,000	200.0	274.0	31.9	32.1	2.41	7
10	975,457	298,000	206.9	220	9.750	34.0	15	yes	0.056	0.093	0.067	6.37	672,170	303,000	210.4	234.0	31.7	31.9	2.38	4
11	975,757	300,000	208.3	220	7.583	33.8	15	yes	0.050	0.072	0.055	6.37	672,470	300,000	208.3	244.0	31.7	31.8	2.52	4
12	976,056	299,000	207.6	220	7.302	33.8	15	yes	0.053	0.087	0.066	6.37	672,772	302,000	209.7	218.0	31.7	31.8	2.39	1
13	976,357	301,000	209.0	220	8.357	33.4	15	yes	0.056	0.082	0.062	6.36	673,073	301,000	209.0	240.0	31.8	31.9	2.46	-22
14	976,651	294,000	204.2	220	9.649	33.6	15	yes	0.046	0.077	0.055	6.36	673,366	293,000	203.5	217.0	31.8	31.9	2.55	-14
15	976,947	296,000	205.6	225	9.059	33.4	15	yes	0.052	0.086	0.067	6.37	673,660	294,000	204.2	209.0	31.8	31.9	2.23	-12
16	977,265	318,000	220.8	225	9.649	33.4	15	yes	0.056	0.082	0.062	6.36	673,943	283,000	196.5	225.0	31.8	31.9	2.46	-13
17	977,574	309,000	214.6	225	10.290	33.4	15	yes	0.078	0.116	0.090	6.36	674,256	313,000	217.4	227.0	31.3	31.4	2.33	-11
18	977,883	309,000	214.6	225	17.350	33.3	15	yes	0.049	0.083	0.062	6.35	674,569	313,000	217.4	225.0	31.4	31.6	2.43	-22
19	978,197	314,000	218.1	225	13.480	33.3	15	yes	0.054	0.094	0.068	6.37	674,885	316,000	219.4	225.0	31.6	31.7	2.36	-21
20	978,512	315,000	218.8	230	11.220	33.1	15	yes	0.055	0.091	0.068	6.40	675,204	319,000	221.5	227.0	31.9	32.0	2.33	-19
21	978,819	307,000	213.2	225	10.170	33.4	15	yes	0.050	0.086	0.061	6.35	675,515	311,000	216.0	225.0	32.0	32.2	2.60	-6
22	979,127	308,000	213.9	225	10.590	33.1	15	yes	0.073	0.121	0.074	6.41	675,811	296,000	205.6	103.0	32.0	32.0	2.43	-11
23	979,431	304,000	211.1	225	12.120	33.3	15	yes	0.072	0.116	0.089	6.41	676,118	307,000	213.2	223.0	32.3	32.5	2.47	-17
24	979,737	306,000	212.5	225	10.380	33.3	15	yes	0.049	0.084	0.061	6.36	676,422	304,000	211.1	219.0	32.0	32.1	2.32	-4
25	980,043	306,000	212.5	225	10.120	33.1	15	yes	0.048	0.080	0.082	6.38	676,737	315,000	218.8	218.0	32.1	32.2	2.82	0
26	980,350	307,000	213.2	225	6.820	33.4	15	yes	0.050	0.078	0.060	6.37	677,053	316,000	219.4	220.0	32.2	32.4	2.66	3
27	980,657	307,000	213.2	225	6.841	33.1	15	yes	0.048	0.074	0.061	6.37	677,359	306,000	212.5	222.0	32.4	32.5		-12
28	980,963	306,000	212.5	225	6.819	32.9	15	yes	0.046	0.072	0.060	6.36	677,671	312,000	216.7	220.0	32.5	32.6	2.56	-8
29	981,273	310,000	215.3	225	6.925	33.1	15	yes	0.046	0.072	0.058	6.36	677,990	319,000	221.5	223.0	32.8	32.9	2.44	-14
30	981,578	305,000	211.8	225	6.966	33.1	15	yes	0.046	0.071	0.060	6.35	678,293	303,000	210.4	220.0	32.9	33.0	2.30	20
31	981,884	306,000	212.5	225	7.019	33.3	15	yes	0.042	0.068	0.062	6.35	678,600	307,000	213.2	220.0	32.7	32.8	2.16	21
TOTALS	#####													9513000						
AVERAGE	######		213.4	225.5	9.034	33.56			0.055	0.087	0.068	6.37		306,871	213.1	229.2	31.9	32.1	2.41	-4
MAXIMUM	331000		230	240	17.350	34.50			0.108	0.186	0.157	6.41		332000	230.6	299.0	32.9	33.0	2.82	21
MINIMUM	285000		198	220	6.485	32.90			0.042	0.068	0.054	6.34		283000	196.5	103.0	31.3	31.4	2.13	-22

April 2008

Date	Raw							Static Mixer Flush	Filters				Filter Effluent						Cl-17	Temperature
	Meter Reading	Raw Flow	Flow	Meter	Turb.	Temp.	DL Pump		#1	#2	Comb.	pH	Meter Reading	Filter Effluen	Flow	Meter	Old Res.	New Res.	(mg/L)	Outside
	981,884	(gal)	(gpm)	(gpm)	(NTU)	(deg. F)			(NTU)	(NTU)	(NTU)		678,600	(gal)	(gpm)	(gpm)	(ft)	(ft)		
1	982,189	305,000	211.8	225	7.035	33.6	15	yes	0.044	0.069	0.058	6.35	678,900	300,000	208.3	216.0	32.5	32.6	2.08	34
2	982,491	302,000	209.7	225	9.594	33.3	15	yes	0.045	0.069	0.056	6.36	679,216	316,000	219.4	217.0	32.6	32.7	2.12	21
3	982,798	307,000	213.2	225	9.027	33.1	15	yes	0.054	0.084	0.069	6.37	679,528	312,000	216.7	223.0	32.7	32.8	2.24	17
4	983,100	302,000	209.7	225	9.580	33.1	15	yes	0.047	0.076	0.064	6.36	679,832	304,000	211.1	217.0	32.7	32.8	1.97	33
5	983,404	304,000	211.1	225	8.974	32.9	15	yes	0.049	0.080	0.066	6.35	680,145	313,000	217.4	225.0	32.8	32.9	1.60	6
6	983,706	302,000	209.7	225	9.453	32.9	15	yes	0.054	0.084	0.073	6.35	680,451	306,000	212.5	218/	32.8	32.9	1.85	-9
7	984,007	301,000	209.0	225	10.170	33.1	15	yes	0.048	0.071	0.064	6.35	680,756	305,000	211.8	210.0	32.4	32.5	2.06	-7
8	984,319	312,000	216.7	225	9.319	32.9	15	yes	0.053	0.082	0.071	6.36	681,064	308,000	213.9	229.0	32.2	32.3	2.07	-12
9	984,621	302,000	209.7	210	8.804	32.5	15	yes	0.043	0.063	0.055	6.35	681,371	307,000	213.2	196.0	32.1	32.2	1.86	-4
10	984,904	283,000	196.5	225	12.000	33.1	15	yes	0.045	0.066	0.059	6.37	681,665	294,000	204.2	200.0	31.8	31.9	1.75	-9
11	985,222	318,000	220.8	240			15	yes					681,985	320,000	222.2		31.8	31.9		-11
12	985,540	318,000	220.8	225	9.003	32.9	7.5	yes	0.050	0.078	0.072	6.37	682,309	324,000	225.0	222.0	31.7	31.8	2.23	0
13	985,851	311,000	216.0	225	7.954	32.7	7.5	yes	0.051	0.082	0.068	6.36	682,619	310,000	215.3	226.0	31.9	32.0	2.17	10
14	986,165	314,000	218.1	225	7.599	32.5	7.5	yes	0.053	0.083	0.072	6.37	682,942	323,000	224.3	201.0	31.7	31.9	2.10	-7
15	986,476	311,000	216.0	225	8.061	32.7	7.5	yes	0.050	0.078	0.063	6.36	683,259	317,000	220.1	233.0	31.6	31.7	2.14	-11
16	986,787	311,000	216.0	225	8.635	32.5	7.5	yes	0.055	0.084	0.070	6.37	683,570	311,000	216.0	218.0	31.6	31.7	2.50	-7
17	987,095	308,000	213.9	225	8.041	32.4	7.5	yes	0.053	0.081	0.070	6.38	683,885	315,000	218.8	223.0	31.6	31.7	2.43	1
18	987,400	305,000	211.8	225	8.000	32.9	7.5	yes	0.052	0.083	0.070	6.37	684,198	313,000	217.4	202.0	31.4	31.5	2.10	30
19	987,706	306,000	212.5	225	7.694	32.9	7.5	yes	0.054	0.079	0.071	6.39	684,513	315,000	218.8	224.0	31.4	31.6	2.00	31
20	988,010	304,000	211.1	225	7.548	32.9	7.5	yes	0.055	0.089	0.075	6.38	684,820	307,000	213.2	183.0	31.0	31.2	1.76	32
21	988,312	302,000	209.7	225	7.612	32.7	7.5	yes	0.070	0.117	0.097	6.42	685,133	313,000	217.4	193.0			1.56	35
22	988,612	300,000	208.3	225	7.830	32.9	7.5	yes	0.038	0.055	0.047	6.27	685,442	309,000	214.6	224.0	30.2	30.3	1.76	35
23	988,910	298,000	206.9	225	8.896	32.9	7.5	yes	0.039	0.054	0.044	6.27	685,746	304,000	211.1	210.0	29.8	30.0	1.85	33
24	989,205	295,000	204.9	220	7.600	32.9	7.5	yes	0.039	0.055	0.037	6.29	686,040	294,000	204.2	225.0	29.2	29.4	1.80	
25	989,499	294,000	204.2	220	7.272	32.7	7.5	yes	0.042	0.060	0.052	6.29	686,336	296,000	205.6	240.0	28.7	28.9	2.15	10
26	989,792	293,000	203.5	220	7.766	32.7	7.5	yes	0.043	0.060	0.058	6.31	686,631	295,000	204.9	227.0	28.3	28.5	2.37	2
27	990,078	286,000	198.6	210	7.219	32.9	7.5	yes	0.045	0.062	0.052	6.32	686,912	281,000	195.1	207.0	27.7	27.9	2.67	7
28	990,353	275,000	191.0	205	6.611	32.9	7.5	yes	0.040	0.058	0.051	6.29	687,189	277,000	192.4	206.0	26.9	27.2	1.81	12
29	990,651	298,000	206.9	225	5.201	33.1	15	yes	0.043	0.059	0.047	6.31	687,489	300,000	208.3	234.0	26.9	27.1	2.14	11
30	990,954	303,000	210.4	225	8.761	33.1	15	yes	0.044	0.061	0.049	6.32	687,799	310,000	215.3	223.0	26.9	27.2	2.27	11
31																				
TOTALS	#####												9199000							
AVERAGE	######		210.0	223.3	8.319	32.89			0.048	0.073	0.062	6.35	306,633		212.9	216.2	30.9	31.0	2.05	10
MAXIMUM	318000		221	240	12.000	33.60			0.070	0.117	0.097	6.42	324000		225.0	240.0	32.8	32.9	2.67	35
MINIMUM	275000		191	205	5.201	32.40			0.038	0.054	0.037	6.27	277000		192.4	183.0	26.9	27.1	1.56	-12

May 2008

Date	Raw							Static Mixer Flush	Filters				Filter Effluent						Cl-17	Temperature
	Meter Reading	Raw Flow	Flow	Meter	Turb.	Temp.	DL Pump		#1	#2	Comb.	pH	Meter Reading	Filter Effluen	Flow	Meter	Old Res.	New Res.	(mg/L)	Outside
	990,954	(gal)	(gpm)	(gpm)	(NTU)	(deg. F)			(NTU)	(NTU)	(NTU)		687,799	(gal)	(gpm)	(gpm)	(ft)	(ft)		
1	991,256	302,000	209.7	225	8.280	32.9	15	yes	0.039	0.054	0.036	6.29	688,107	308,000	213.9	209.0	26.9	27.1	3.19	15
2	991,553	297,000	206.3	225	5.884	33.4	15	yes	0.039	0.054	0.049	6.29	688,405	298,000	206.9	212.0	26.8	27.0	2.39	13
3	991,857	304,000	211.1	225	4.781	32.9	15	yes	0.042	0.058	0.071	6.29	688,709	304,000	211.1	232.0	26.9	27.1	2.07	18
4	992,159	302,000	209.7	225	6.773	33.4	15	yes	0.040	0.054	0.046	6.29	689,013	304,000	211.1	221.0	26.6	26.8	2.31	31
5	992,464	305,000	211.8	225	5.536	33.4	15	yes	0.038	0.055	0.046	6.29	689,318	305,000	211.8	221.0	26.2	26.5	1.57	32
6	992,771	307,000	213.2	240	6.594	33.4	15	yes	0.041	0.057	0.045	6.30	689,623	305,000	211.8	232.0	25.9	26.2	1.91	24
7	993,102	331,000	229.9	240	6.270	33.3	15	yes	0.042	0.069	0.059	6.31	689,944	321,000	222.9	296.0	25.9	26.2	2.42	36
8	993,435	333,000	231.3	240	6.540	33.8	15	yes	0.042	0.067	0.117	6.25	690,268	324,000	225.0	291.0	25.8	26.1	1.21	38
9	993,762	327,000	227.1	240	7.799	33.4	15	yes	0.041	0.072	0.051	6.29	690,596	328,000	227.8	194.0	25.8	26.0	4.76	34
10	994,087	325,000	225.7	240	9.797	33.6	15	yes	0.042	0.053	0.121	6.26	690,880	284,000	197.2	249.0	25.3	25.6	0.28	35
11	994,410	323,000	224.3	240	9.799	34.0	15	yes	0.036	0.056	0.045	6.23	691,200	320,000	222.2	228.0	25.5	25.7	2.35	35
12	994,730	320,000	222.2	240	7.844	34.2	15	yes	0.037	0.056	0.042	6.20	691,507	307,000	213.2	200.0	25.1	25.4	1.71	34
13	995,053	323,000	224.3	250	9.474	34.7	15	yes	0.035	0.063	0.043	6.20	691,827	320,000	222.2	231.0	25.1	25.4	1.39	41
14	995,394	341,000	236.8	250	17.210	34.9	15	yes	0.045	0.080	0.057	6.11	692,165	338,000	234.7	200.0	25.3	25.5	2.31	39
15	995,734	340,000	236.1	250	20.350	34.9	15	yes	0.041	0.093	0.050	6.13	692,487	322,000	223.6	125.0	25.5	25.8	2.14	30
16	996,071	337,000	234.0	250	4.165	35.1	15	yes	0.041	0.062	0.051	6.08	692,814	327,000	227.1	242.0	25.6	25.9	2.15	28
17	996,408	337,000	234.0	250	3.926	35.1	15	yes	0.038	0.064	0.052	6.10	693,152	338,000	234.7	236.0	26.1	26.4	2.12	37
18	996,745	337,000	234.0	250	3.571	34.9	15	yes	0.038	0.063	0.050	6.09	693,489	337,000	234.0	236.0	26.6	26.8	2.22	35
19	997,076	331,000	229.9	0	3.232	35.4	15	yes	0.045	0.069	0.054	6.07	693,822	333,000	231.3	0.0			1.67	37
20	997,414	338,000	234.7	260	8.850	35.1	15	yes	0.039	0.060	0.048	6.03	694,161	339,000	235.4	251.0	26.9	27.1	1.88	26
21	997,772	358,000	248.6	260	2.813	34.9	15	yes	0.036	0.054	0.049	6.03	694,517	356,000	247.2	250.0	27.4	27.7	2.12	24
22	998,127	355,000	246.5	260	2.584	34.7	15	yes	0.037	0.066	0.052	5.99	694,868	351,000	243.8	256.0	27.8	28.0	2.06	33
23	998,483	356,000	247.2	265	2.559	35.4	15	yes	0.036	0.056	0.042	6.01	695,216	348,000	241.7	257.0	28.1	28.3	1.73	42
24	998,840	357,000	247.9	265	2.250	34.5	15	yes	0.047	0.071	0.059	5.90	695,571	355,000	246.5	257.0	28.5	28.7	1.89	41
25	999,182	342,000	237.5	250	3.954	34.7	15	yes	0.051	0.083	0.071	5.83	695,900	329,000	228.5	246.0	28.6	28.8	1.97	41
26	999,525	343,000	238.2	250	3.056	34.9	15	yes	0.056	1.305	0.065	5.54	696,205	305,000	211.8	127.0	27.9	28.0	0.00	39
27	999,861	336,000	233.3	250	3.136	33.4	15	yes	0.040	0.052	0.044	6.01	696,528	323,000	224.3	241.0	28.0	28.2	1.73	34
28	######	343,000	238.2	250	2.292	34.5	15	yes	0.036	0.054	0.045	5.95	696,876	348,000	241.7	241.0	28.4	28.6	1.78	37
29	######	340,000	236.1	250	2.768	35.4	15	yes	0.036	0.051	0.046	5.91	697,215	339,000	235.4	241.0	28.6	28.9	1.56	27
30	######	339,000	235.4	250	1.956	36.1	15	yes	0.035	0.050	0.043	5.91	697,558	343,000	238.2	239.0	29.0	29.2	0.32	33
31	######	341,000	236.8	250	2.776	37.2	15	yes	0.033	0.047	0.037	5.89	697,897	339,000	235.4	240.0	29.3	29.5	0.49	33
TOTALS	#####												######							
AVERAGE	######	230.1	237.6	6.026	34.44				0.040	0.102	0.054	6.10	325,742	226.2	222.6	26.8	27.1	1.86	32	
MAXIMUM	358000	249	265	20.350	37.20				0.056	1.305	0.121	6.31	356000	247.2	296.0	29.3	29.5	4.76	42	
MINIMUM	297000	206	0	1.956	32.90				0.033	0.047	0.037	5.54	284000	197.2	0.0	25.1	25.4	0.00	13	

June 2008

Date	Raw							Static Mixer Flush	Filters				Filter Effluent						Cl-17	Temperature
	Meter Reading	Raw Flow	Flow	Meter	Turb.	Temp.	DL Pump		#1	#2	Comb.	pH	Meter Reading	Filter Effluen	Flow	Meter	Old Res.	New Res.	(mg/L)	Outside
	1,224	(gal)	(gpm)	(gpm)	(NTU)	(deg. F)			(NTU)	(NTU)	(NTU)		697,897	(gal)	(gpm)	(gpm)	(ft)	(ft)		
1	1,571	347,000	241.0	250	2.847	37.2	15	yes	0.034	0.049	0.041	5.90	698,236	339,000	235.4	250.0	29.5	29.7	1.62	31
2	1,908	337,000	234.0	250	2.438	38.7	15	yes	0.034	0.048	0.039	5.91	698,571	335,000	232.6	240.0	29.7	29.8	1.28	33
3	2,249	341,000	236.8	250	2.414	38.7	15	yes	0.033	0.048	0.030	5.90	698,909	338,000	234.7	241.0	29.9	30.1	1.26	40
4	2,591	342,000	237.5	250	1.733	39.7	15	yes	0.033	0.048	0.030	5.88	699,252	343,000	238.2	245.0	30.2	30.5	1.20	40
5	2,910	319,000	221.5	230	2.304	40.3	15	yes	0.037	0.056	0.039	5.84	699,564	312,000	216.7	221.0	30.3	30.5	1.37	38
6	3,202	292,000	202.8	210	1.791	38.5	15	yes	0.057	0.105	0.065	5.83	699,858	294,000	204.2	205.0	30.1	30.2	1.51	32
7	3,472	270,000	187.5	200	1.066	39.0	7.5	yes	0.033	0.048	0.026	5.98	700,134	276,000	191.7	190.0	29.7	29.9	1.36	30
8	3,746	274,000	190.3	200	0.650	39.4	7.5	yes	0.033	0.048	0.024	5.97	700,406	272,000	188.9	197.0	29.3	29.5	1.36	37
9	4,018	272,000	188.9	200	1.761	39.6	7.5	yes	0.033	0.049	0.026	5.98	700,678	272,000	188.9	192.0	29.0	28.8	1.43	34
10	4,290	272,000	188.9	200	1.077	41.0	7.5	yes	0.035	0.053	0.029	6.01	700,952	274,000	190.3	191.0	28.3	28.6	1.49	39
11	4,561	271,000	188.2	200	2.167	43.7	7.5	yes	0.035	0.054	0.030	5.99	701,222	270,000	187.5	191.0	27.6	27.9	1.46	49
12	4,834	273,000	189.6	200	1.574	46.9	7.5	yes	0.035	0.049	0.031	6.03	701,482	260,000	180.6	198.0	26.8	27.1	1.45	49
13	5,103	269,000	186.8	200	2.590	50.5	7.5	yes	0.037	0.052	0.032	6.03	701,757	275,000	191.0	188.0	26.0	26.3	1.43	41
14	5,377	274,000	190.3	200	1.842	51.6	7.5	yes	0.036	0.052	0.029	6.04	702,033	276,000	191.7	193.0	25.6	25.8	1.35	45
15	5,646	269,000	186.8	200	1.144	52.9	7.5	yes	0.034	0.049	0.029	6.03	702,305	272,000	188.9	194.0	25.1	25.5	1.36	44
16	5,915	269,000	186.8	200	0.921	52.6	7.5	yes	0.034	0.049	0.027	6.04	702,573	268,000	186.1	184.0	24.6	25.0	1.46	46
17	6,184	269,000	186.8	200	1.381	49.3	7.5	yes	0.034	0.051	0.033	6.06	702,838	265,000	184.0	192.0	24.0	24.4	1.47	41
18	6,453	269,000	186.8	200	2.001	49.6	7.5	yes	0.033	0.050	0.026	6.06	703,108	270,000	187.5	196.0	23.5	23.9	1.21	44
19	6,726	273,000	189.6	200	4.719	51.4	7.5	yes	0.034	0.048	0.027	6.05	703,385	277,000	192.4	189.0	23.2	23.6	1.55	47
20	6,995	269,000	186.8	200	2.360	54.7	7.5	yes	0.037	0.052	0.032	6.07	703,661	276,000	191.7	183.0	22.7	23.1	1.65	51
21	7,265	270,000	187.5	200	2.072	53.4	7.5	yes	0.036	0.050	0.035	6.08	703,934	273,000	189.6	198.0	22.1	22.6	1.63	50
22	7,533	268,000	186.1	200	2.110	56.8	7.5	yes	0.035	0.047	0.025	6.09	704,205	271,000	188.2	192.0	21.6	22.1	1.58	49
23	7,804	271,000	188.2	200	9.897	56.5	7.5	yes	0.035	0.047	0.025	6.10	704,482	277,000	192.4	187.0	20.9	21.4	1.56	48
24	8,072	268,000	186.1	200	2.561	57.2	7.5	yes	0.034	0.047	0.027	6.10	704,753	271,000	188.2	185.0	20.0	20.5	1.54	37
25	8,339	267,000	185.4	150	7.268	53.8	7.5	yes	0.034	0.049	0.029	6.10	705,020	267,000	185.4	184.0	19.2	19.7	1.66	51
26	8,544	205,000	142.4	150	3.269	55.2	7.5	yes	0.032	0.044	0.022	6.13	705,232	212,000	147.2	146.0	11.9	22.7	1.73	40
27	8,820	276,000	191.7	250	2.212	53.6	15	yes	0.032	0.044	0.026	6.09	705,509	277,000	192.4	206.0	3.8	23.7	1.91	35
28	9,170	350,000	243.1	255	2.088	53.1	15	yes	0.033	0.042	0.025	6.04	705,849	340,000	236.1	245.0	3.8	23.5	2.01	43
29	9,517	347,000	241.0	255	2.147	54.1	15	yes	0.034	0.042	0.021	6.05	706,198	349,000	242.4	253.0	3.8	22.9	2.01	49
30	9,868	351,000	243.8	255	1.845	56.1	15	yes	0.034	0.043	0.023	6.03	706,545	347,000	241.0	249.0	3.8	22.1	1.86	51
31																				
TOTALS	#####													8648000						
AVERAGE	######	200.1	211.8	2.475	48.17				0.035	0.050	0.030	6.01		288,267	200.2	204.2	22.5	25.7	1.53	42
MAXIMUM	351000	244	255	9.897	57.20				0.057	0.105	0.065	6.13		349000	242.4	253.0	30.3	30.5	2.01	51
MINIMUM	205000	142	150	0.650	38.50				0.032	0.042	0.021	5.83		212000	147.2	146.0	3.8	19.7	1.20	30

August 2008

Date	Raw							Static Mixer Flush	Filters				Filter Effluent						Cl-17	Temperature
	Meter Reading	Raw Flow	Flow	Meter	Turb.	Temp.	DL Pump		#1	#2	Comb.	pH	Meter Reading	Filter Effluen	Flow	Meter	Old Res.	New Res.	(mg/L)	Outside
	21,043	(gal)	(gpm)	(gpm)	(NTU)	(deg. F)			(NTU)	(NTU)	(NTU)		717,716	(gal)	(gpm)	(gpm)	(ft)	(ft)		
1	21,359	316,000	219.4	225	1.597	52.0	15	yes	0.031	0.045	0.026	6.04	718,030	314,000	218.1	219.0	35.0	33.2	1.57	47
2	21,657	298,000	206.9	225	2.347	51.3	15	yes	0.031	0.043	0.027	6.07	718,328	298,000	206.9	224.0	35.0	33.6	1.28	41
3	21,990	333,000	231.3	225	2.131	49.3	15	yes	0.032	0.044	0.026	6.09	718,660	332,000	230.6	223.0	35.0	34.2	1.38	46
4	22,279	289,000	200.7	225	1.648	48.2	15	yes	0.033	0.050	0.025	6.04	718,941	281,000	195.1	218.0	35.0	33.2	1.19	42
5	22,588	309,000	214.6	225	0.983	48.0	15	yes	0.032	0.049	0.031	6.02	719,224	283,000	196.5	224.0	35.0	34.2	1.11	42
6	22,899	311,000	216.0	225	0.991	48.2	15	yes	0.032	0.051	0.030	6.03	719,544	320,000	222.2	206.0	34.9	34.6	0.92	45
7	23,207	308,000	213.9	225	1.274	50.0	15	yes	0.031	0.047	0.028	6.04	719,843	299,000	207.6	220.0	34.7	34.9	0.97	52
8	23,514	307,000	213.2	225			15	yes	0.031	0.047	0.024	6.09	720,146	303,000	210.4	225.0	34.9	35.1		56
9	23,821	307,000	213.2	225	2.009	53.2	15	yes	0.032	0.046	0.026	6.11	720,458	312,000	216.7	222.0	35.3	34.4	0.85	52
10	24,138	317,000	220.1	225	1.988	54.9	15	yes	0.163	0.224	0.157	6.42	720,777	319,000	221.5	227.0	35.6	34.8	0.73	51
11	24,442	304,000	211.1	225	1.809	56.3	15	yes	0.033	0.054	0.034	6.00	721,075	298,000	206.9	222.0	35.5	34.7	1.08	51
12	24,750	308,000	213.9	220	2.174	56.3	15	yes	0.033	0.050	0.028	6.03	721,384	309,000	214.6	227.0	35.7	34.9	1.35	45
13	25,057	307,000	213.2	220	2.166	56.1	15	yes	0.032	0.050	0.026	6.02	721,698	314,000	218.1	226.0	35.9	36.1		51
14	25,344	287,000	199.3	210	1.045	56.7	15	yes	0.040	0.067	0.036	6.01	721,982	284,000	197.2	202.0	35.7	35.9	1.82	53
15	25,622	278,000	193.1	210	1.078	57.6	15	yes	0.033	0.047	0.028	6.08	722,266	284,000	197.2	208.0	35.7	35.9	1.74	57
16	25,909	287,000	199.3	210	1.431	57.9	15	yes	0.033	0.048	0.026	6.07	722,556	290,000	201.4	211.0	35.5	35.7	1.72	55
17	26,192	283,000	196.5	210	1.571	58.6	15	yes	0.033	0.052	0.029	6.04	722,848	292,000	202.8	207.0	35.3	34.7	1.83	51
18	26,473	281,000	195.1	210	1.796	58.5	15	yes	0.033	0.048	0.027	6.04	723,138	290,000	201.4	205.0	34.9	35.2	1.79	51
19	26,750	277,000	192.4	210	1.489	58.1	15	yes	0.033	0.049	0.031	6.05	723,428	290,000	201.4	189.0	34.8	35.1	1.77	50
20	27,035	285,000	197.9	210	1.928	58.3	7.5	yes	0.035	0.050	0.039	6.06	723,710	282,000	195.8	202.0	34.3	34.6	1.78	53
21	27,318	283,000	196.5	210	1.358	58.3	7.5	yes	0.037	0.053	0.034	6.07	723,995	285,000	197.9	216.0	34.1	34.4	1.74	51
22	27,603	285,000	197.9	210	19.710	57.9	7.5	yes	0.033	0.051	0.032	6.01	724,291	296,000	205.6	209.0	34.0	34.3	1.82	51
23	27,887	284,000	197.2	210	2.145	58.1	7.5	yes	0.035	0.053	0.035	5.92	724,578	287,000	199.3	225.0	34.0	34.3	1.78	51
24	28,168	281,000	195.1	205	2.189	58.3	7.5	yes	0.036	0.054	0.034	6.00	724,870	292,000	202.8	207.0	34.0	34.4	1.71	48
25	28,452	284,000	197.2	175	2.216	56.1	7.5	yes	0.033	0.052	0.031	6.04	725,166	296,000	205.6	104.0	33.7	34.1	1.57	38
26	28,727	275,000	191.0	210	2.980	51.6	7.5	yes	0.040	0.139	0.029	6.04	725,446	280,000	194.4	154.0	32.9	33.2	1.67	40
27	28,993	266,000	184.7	210	2.519	50.5	7.5	yes	0.035	0.051	0.037	6.98	725,698	252,000	175.0	92.0	32.3	32.7	2.18	42
28	29,273	280,000	194.4	200	2.486	49.3	7.5	yes	0.038	0.069	0.035	6.02	725,987	289,000	200.7	195.0	32.3	32.6	1.78	40
29	29,561	288,000	200.0	210	2.893	48.4	7.5	yes	0.053	0.153	0.051	6.07	726,283	296,000	205.6	116.0	31.6	31.9	1.95	42
30	29,843	282,000	195.8	210	2.661	47.8	7.5	yes	0.039	0.075	0.040	6.03	726,580	297,000	206.3	209.0	31.4	31.8	1.69	38
31	30,133	290,000	201.4	210	2.574	48.9	7.5	yes	0.038	0.069	0.042	6.04	726,874	294,000	204.2	213.0	31.4	31.7	1.71	48
														9158000						
TOTALS	#####													295,419	205.2	201.5	34.4	34.2	1.53	48
AVERAGE	######	203.6	214.4	2.506	53.82				0.039	0.064	0.036	6.08		332000	230.6	227.0	35.9	36.1	2.18	57
MAXIMUM	333000	231	225	19.710	58.60				0.163	0.224	0.157	6.98		252000	175.0	92.0	31.4	31.7	0.73	38
MINIMUM	266000	185	175	0.983	47.80				0.031	0.043	0.024	5.92								

September 2008

Date	Raw							Static Mixer Flush	Filters				Filter Effluent						Cl-17	Outside Temperature
	Meter Reading	Raw Flow	Flow	Meter	Turb.	Temp.	DL Pump		#1	#2	Comb.	pH	Meter Reading	Filter Effluent	Flow	Meter	Old Res.	New Res.	(mg/L)	
	30,133	(gal)	(gpm)	(gpm)	(NTU)	(deg. F)			(NTU)	(NTU)	(NTU)		726,874	(gal)	(gpm)	(gpm)	(ft)	(ft)		
1	30,411	278,000	193.1	210	2.530	48.9	7.5	yes	0.039	0.069	0.039	6.04	727,152	278,000	193.1	200.0	31.3	31.7	1.60	45
2	30,692	281,000	195.1	210	2.534	49.6	7.5	yes	0.051	0.101	0.054	5.99	727,447	295,000	204.9	206.0	31.1	31.4	1.67	49
3	30,979	287,000	199.3	210	2.461	50.2	7.5	yes	0.036	0.053	0.032	6.22	727,745	298,000	206.9	205.0	31.1	31.5	1.60	
4	31,264	285,000	197.9	210	2.333	50.7	7.5	yes	0.035	0.050	0.033	6.22	728,039	294,000	204.2	211.0	31.0	31.3	1.66	49
5	31,551	287,000	199.3	210	2.313	51.1	7.5	yes	0.034	0.050	0.029	6.24	728,334	295,000	204.9	208.0	30.8	31.1	2.09	42
6	31,839	288,000	200.0	210	2.228	51.7	7.5	yes	0.543	0.170	0.183	9.14	728,605	271,000	188.2	115.0	29.8	30.1	1.32	42
7	32,123	284,000	197.2	210	2.307	51.1	7.5	yes	0.032	0.046	0.024	6.21	728,901	296,000	205.6	204.0	30.3	30.7	1.62	46
8	32,408	285,000	197.9	210	5.709	51.6	7.5	yes	0.033	0.045	0.025	6.23	729,182	281,000	195.1	207.0	29.7	30.1	1.60	44
9	32,691	283,000	196.5	210	9.461	51.1	7.5	yes	0.031	0.043	0.026	6.17	729,456	274,000	190.3	210.0	29.3	29.7	1.63	43
10	32,973	282,000	195.8	210	1.975	50.2	7.5	yes	0.033	0.046	0.026	6.10	729,743	287,000	199.3	205.0	29.0	29.5	1.52	38
11	33,284	311,000	216.0	225	3.219	48.7	7.5	yes	0.032	0.045	0.031	6.13	730,065	322,000	223.6	226.0	29.3	29.7	1.68	35
12	33,591	307,000	213.2	220	2.052	45.9	7.5	yes	0.027	0.047	0.024	6.12	730,379	314,000	218.1	227.0	29.6	30.0	1.54	32
13	33,904	313,000	217.4	225	1.842	44.4	7.5	yes	0.028	0.041	0.026	6.13	730,699	320,000	222.2	228.0	30.0	30.4	1.49	33
14	34,213	309,000	214.6	225	1.778	44.2	7.5	yes	0.029	0.044	0.026	6.14	731,018	319,000	221.5	228.0	30.4	30.7	1.26	43
15	34,520	307,000	213.2	230	2.080	43.9	7.5	yes	0.028	0.040	0.024	6.13	731,336	318,000	220.8	112.0	30.3	30.6		43
16	34,829	309,000	214.6	230	2.634	44.2	7.5	yes	0.028	0.042	0.027	6.10	731,647	311,000	216.0	227.0	30.7	31.1	1.43	43
17	35,141	312,000	216.7	225	2.127	44.1	7.5	yes	0.028	0.041	0.022	6.12	731,965	318,000	220.8	226.0	30.9	31.2	1.36	39
18	35,452	311,000	216.0	225	1.966	43.7	7.5	yes	0.027	0.041	0.022	6.13	732,278	313,000	217.4	225.0	31.1	31.4	1.19	39
19	35,764	312,000	216.7	225	1.736	43.5	7.5	yes	0.028	0.041	0.024	6.14	732,599	321,000	222.9	230.0	31.3	31.6	1.42	42
20	36,071	307,000	213.2	225	1.285	44.2	7.5	yes	0.028	0.043	0.023	6.13	732,922	323,000	224.3	225.0	31.7	32.0	1.32	
21	36,383	312,000	216.7	225	1.567	44.1	7.5	yes	0.027	0.040	0.022	6.13	733,244	322,000	223.6	227.0	31.8	32.1	1.27	41
22	36,692	309,000	214.6	225	1.560	43.5	7.5	yes	0.028	0.042	0.020	6.16	733,562	318,000	220.8	222.0	31.9	32.2	1.37	33
23	37,003	311,000	216.0	225	1.537	42.3	7.5	yes	0.027	0.040	0.025	6.14	733,885	323,000	224.3	223.0	32.0	32.3	1.21	34
24	37,304	301,000	209.0	225	1.525	41.9	7.5	yes	0.027	0.039	0.033	6.19	734,196	311,000	216.0	226.0	32.1	32.3	1.17	33
25	37,620	316,000	219.4	225	1.474	41.0	7.5	yes	0.027	0.039	0.022	6.19	734,520	324,000	225.0	234.0	32.7	32.4	1.01	30
26	37,929	309,000	214.6	225	1.463	40.5	7.5	yes	0.027	0.070	0.022	6.23	734,839	319,000	221.5	217.0	32.6	32.9	1.22	35
27	38,236	307,000	213.2	225	1.462	39.4	7.5	yes	0.027	0.070	0.022	6.23	735,154	315,000	218.8	225.0	32.9	33.3	1.04	27
28	38,544	308,000	213.9	225	1.419	38.1	7.5	yes	0.027	0.041	0.022	6.23	735,469	315,000	218.8	230.0	33.4	33.6	1.05	25
29	38,853	309,000	214.6	225	1.511	35.8	7.5	yes	0.027	0.044	0.021	6.26	735,784	315,000	218.8	225.0	33.5	33.3	1.36	26
30	39,161	308,000	213.9	230	1.993	33.6	7.5	yes	0.027	0.045	0.024	6.18	736,098	314,000	218.1	220.0	33.2	33.4	1.16	28
31																				
TOTALS	#####													9224000						
AVERAGE	######	209.0	220.3	2.336	45.11				0.047	0.052	0.032	6.26		307,467	213.5	212.5	31.2	31.5	1.41	38
MAXIMUM	316000	219	230	9.461	51.70				0.543	0.170	0.183	9.14		324000	225.0	234.0	33.5	33.6	2.09	49
MINIMUM	281000	195	210	1.285	33.60				0.027	0.039	0.020	5.99		271000	188.2	112.0	29.0	29.5	1.01	25

October 2008

Date	Raw							Static Mixer Flush	Filters				Filter Effluent						Cl-17	Temperature
	Meter Reading	Raw Flow	Flow	Meter	Turb.	Temp.	DL Pump		#1	#2	Comb.	pH	Meter Reading	Filter Effluen	Flow	Meter	Old Res.	New Res.	(mg/L)	Outside
	39,161	(gal)	(gpm)	(gpm)	(NTU)	(deg. F)			(NTU)	(NTU)	(NTU)		736,098	(gal)	(gpm)	(gpm)	(ft)	(ft)		
1	39,471	310,000	215.3	225	1.720	33.6	7.5	yes	0.027	0.049	0.021	6.19	736,414	316,000	219.4	222.0	33.2	33.4	1.10	23
2	39,787	316,000	219.4	225	1.764	34.0	7.5	yes	0.027	0.053	0.023	6.17	736,736	322,000	223.6	229.0	33.4	33.6	1.05	20
3	40,096	309,000	214.6	225	1.790	35.4	7.5	yes	0.027	0.050	0.021	6.18	737,059	323,000	224.3	229.0	33.6	33.8	1.05	24
4	40,412	316,000	219.4	225	1.753	35.8	7.5	yes	0.027	0.053	0.024	6.18	737,384	325,000	225.7	231.0	34.0	34.2	1.18	28
5	40,718	306,000	212.5	225	1.738	36.0	7.5	yes	0.027	0.054	0.021	6.15	737,698	314,000	218.1	227.0	33.8	34.0	1.28	24
6	41,030	312,000	216.7	225	1.762	36.1	7.5	yes	0.027	0.053	0.019	6.22	738,009	311,000	216.0	222.0	33.5	33.7	1.12	18
7	41,350	320,000	222.2	225	1.860	36.9	7.5	yes	0.027	0.052	0.020	6.22	738,325	316,000	219.4	225.0	33.5	33.5		22
8	41,654	304,000	211.1	225	1.850	37.0	7.5	yes	0.027	0.053	0.023	6.26	738,642	317,000	220.1	224.0	33.7	33.9	1.07	19
9	41,961	307,000	213.2	225	1.907	37.2	7.5	yes	0.027	0.053	0.030	6.22	738,956	314,000	218.1	226.0	34.2	34.2	1.18	20
10	42,271	310,000	215.3	225	1.905	37.4	7.5	yes	0.029	0.045	0.033	6.21	739,267	311,000	216.0	223.0	34.5	34.5	1.28	16
11	42,579	308,000	213.9	225	1.826	37.9	7.5	yes	0.029	0.044	0.033	6.22	739,579	312,000	216.7	225.0	34.9	34.9	1.35	24
12	42,888	309,000	214.6	225	1.839	37.4	7.5	yes	0.029	0.044	0.032	6.21	739,889	310,000	215.3	228.0	35.1	35.1	1.32	18
13	43,191	303,000	210.4	225	1.988	37.8	7.5	yes	0.029	0.043	0.033	6.16	740,202	313,000	217.4	224.0	35.0	35.2	1.18	12
14	43,503	312,000	216.7	225	2.089	38.3	7.5	yes	0.029	0.047	0.035	6.18	740,514	312,000	216.7	227.0	34.8	35.0	1.36	10
15	43,810	307,000	213.2	225	2.156	38.5	7.5	yes	0.029	0.047	0.036	6.17	740,816	302,000	209.7	222.0	34.5	34.7	1.20	16
16	44,113	303,000	210.4	225	2.109	38.3	7.5	yes	0.029	0.042	0.037	6.23	741,116	300,000	208.3	222.0	34.2	34.4	1.25	20
17	44,416	303,000	210.4	225	2.545	38.3	7.5	yes	0.029	0.042	0.036	6.20	741,427	311,000	216.0	221.0	34.2	34.4	1.11	14
18	44,725	309,000	214.6	225	3.996	37.9	7.5	yes	0.029	0.043	0.037	6.22	741,734	307,000	213.2	225.0	34.3	34.5	0.96	13
19	45,029	304,000	211.1	225	4.262	38.5	7.5	yes	0.029	0.043	0.042	6.25	742,043	309,000	214.6	225.0	34.1	34.3	1.24	12
20	45,333	304,000	211.1	225	2.837	38.7	7.5	yes	0.029	0.043	0.037	6.25	742,350	307,000	213.2	225.0	34.0	34.2	0.97	14
21	45,639	306,000	212.5	225	2.636	38.7	7.5	yes	0.029	0.043	0.040	6.26	742,662	312,000	216.7	222.0	34.3	34.5	1.91	14
22	45,943	304,000	211.1	225	8.474	38.5	7.5	yes	0.032	0.048	0.046	6.31	742,969	307,000	213.2	219.0	34.3	34.5	1.52	12
23	46,247	304,000	211.1	225	6.785	38.3	7.5	yes	0.031	0.048	0.042	6.32	743,274	305,000	211.8	233.0	34.6	34.7	1.43	6
24	46,557	310,000	215.3	225	5.652	38.7	7.5	yes	0.031	0.048	0.042	6.31	743,577	303,000	210.4	221.0	34.5	34.7	1.10	5
25	46,866	309,000	214.6	225	3.884	38.1	7.5	yes	0.032	0.049	0.050	6.33	743,894	317,000	220.1	232.0	34.8	34.9	1.12	0
26	47,183	317,000	220.1	225	3.876	37.9	7.5	yes	0.030	0.045	0.044	6.27	744,211	317,000	220.1	228.0	35.0	35.2	1.27	2
27	47,490	307,000	213.2	225	2.027	38.7	7.5	yes	0.029	0.044	0.047	6.27	744,514	303,000	210.4	240.0	34.8	35.0	1.46	24
28	47,801	311,000	216.0	225	1.940	38.3	7.5	yes	0.029	0.044	0.034	6.26	744,830	316,000	219.4	221.0	34.8	34.9	1.34	15
29	48,111	310,000	215.3	225	2.001	38.3	7.5	yes	0.029	0.045	0.033	6.26	745,142	312,000	216.7	225.0	34.7	34.9	1.15	14
30	48,421	310,000	215.3	225	1.960	38.1	7.5	yes	0.029	0.043	0.027	6.23	745,460	318,000	220.8	221.0	34.7	34.9	1.64	9
31	48,734	313,000	217.4	225	1.115	38.5	7.5	yes	0.029	0.042	0.026	6.23	745,780	320,000	222.2	243.0	34.6	34.8	1.32	4
														9682000						
TOTALS	#####													312,323	216.9	226.0	34.3	34.5	1.25	15
AVERAGE	######		214.4	225.0	2.711	37.52			0.029	0.047	0.033	6.23		325000	225.7	243.0	35.1	35.2	1.91	28
MAXIMUM	320000		222	225	8.474	38.70			0.032	0.054	0.050	6.33		300000	208.3	219.0	33.4	33.5	0.96	0
MINIMUM	303000		210	225	1.115	34.00			0.027	0.042	0.019	6.15								

November 2008

Date	Raw							Static Mixer Flush	Filters				Filter Effluent						Cl-17	Temperature
	Meter Reading	Raw Flow	Flow	Meter	Turb.	Temp.	DL Pump		#1	#2	Comb.	pH	Meter Reading	Filter Effluen	Flow	Meter	Old Res.	New Res.	(mg/L)	Outside
	48,734	(gal)	(gpm)	(gpm)	(NTU)	(deg. F)			(NTU)	(NTU)	(NTU)		745,780	(gal)	(gpm)	(gpm)	(ft)	(ft)		
1	49,041	307,000	213.2	225	1.131	38.3	7.5	yes	0.032	0.046	0.030	6.23	746,089	309,000	214.6	221.0	35.0	35.2	1.50	10
2	49,363	322,000	223.6	225	1.100	37.8	7.5	yes	0.029	0.042	0.027	6.24	746,418	329,000	228.5	223.0	34.9	35.1	1.17	6
3	49,674	311,000	216.0	225	1.087	38.1	7.5	yes	0.028	0.042	0.028	6.20	746,732	314,000	218.1	225.0	34.6	34.7	1.24	10
4	49,986	312,000	216.7	225	1.045	37.9	7.5	yes	0.029	0.042	0.027	6.21	747,048	316,000	219.4	218.0	34.7	34.9	1.30	11
5	50,298	312,000	216.7	225	1.013	37.9	7.5	yes	0.238	0.299	0.226	6.22	747,363	315,000	218.8	232.0	34.9	35.0	1.38	17
6	50,608	310,000	215.3	225	1.029	37.9	7.5	yes	0.029	0.043	0.027	6.22	747,677	314,000	218.1	226.0	35.1	35.2	1.71	18
7	50,920	312,000	216.7	225	1.015	37.9	7.5	yes	0.029	0.043	0.027	6.22	747,993	316,000	219.4	224.0	35.2	35.4	1.60	8
8	51,232	312,000	216.7	225	1.037	37.9	7.5	yes	0.029	0.043	0.026	6.21	748,304	311,000	216.0	225.0	35.5	35.7	1.27	6
9	51,538	306,000	212.5	225	1.038	37.8	7.5	yes	0.029	0.043	0.027	6.20	748,615	311,000	216.0	228.0	35.7	35.9	1.22	11
10	51,848	310,000	215.3	225	1.043	38.1	7.5	yes	0.029	0.044	0.027	6.19	748,929	314,000	218.1	233.0	35.5	35.7	1.32	18
11	52,162	314,000	218.1	225	1.006	37.9	7.5	yes	0.029	0.043	0.027	6.20	749,241	312,000	216.7	225.0	35.5	35.6	2.20	21
12	52,466	304,000	211.1	225	1.025	37.8	7.5	yes	0.029	0.043	0.027	6.19	749,549	308,000	213.9	220.0	35.4	35.6	1.33	10
13	52,774	308,000	213.9	225	1.016	37.9	7.5	yes	0.029	0.044	0.027	6.20	749,858	309,000	214.6	222.0	35.5	35.6	1.33	15
14	53,071	297,000	206.3	225	1.032	37.6	7.5	yes	0.029	0.044	0.029	6.19	750,164	306,000	212.5	224.0	35.6	35.5		15
15	53,380	309,000	214.6	225	0.976	37.4	7.5	yes	0.031	0.047	0.029	6.17	750,478	314,000	218.1	229.0	35.8	35.8	1.81	14
16	53,683	303,000	210.4	225	1.027	37.2	7.5	yes	0.029	0.045	0.028	6.20	750,786	308,000	213.9	220.0	35.8	35.7	1.75	10
17	53,985	302,000	209.7	230	1.093	36.7	7.5	yes	0.030	0.046	0.029	6.21	751,093	307,000	213.2	218.0	35.4	35.7	1.68	-1
18	54,292	307,000	213.2	225	1.105	36.7	7.5	yes	0.030	0.047	0.028	6.22	751,404	311,000	216.0	225.0	35.4	35.3	1.45	9
19	54,595	303,000	210.4	225	1.108	36.7	7.5	yes	0.031	0.053	0.028	6.21	751,706	302,000	209.7	118.0	35.0	34.9	2.49	2
20	54,883	288,000	200.0	225	1.123	37.0	7.5	yes	0.030	0.046	0.027	6.23	751,998	292,000	202.8	220.0	34.9	34.9	3.44	-20
21	55,184	301,000	209.0	225	1.174	36.7	7.5	yes	0.030	0.046	0.028	6.21	752,301	303,000	210.4	225.0	34.6	34.6	1.55	-18
22	55,482	298,000	206.9	225	1.173	36.9	7.5	yes	0.033	0.052	0.036	6.27	752,584	283,000	196.5	215.0	34.3	34.3	1.81	-13
23	55,784	302,000	209.7	225	1.216	36.9	7.5	yes	0.031	0.048	0.030	6.25	752,885	301,000	209.0	229.0	34.3	34.3	2.63	-7
24	56,087	303,000	210.4	225	1.217	36.7	7.5	yes	0.031	0.048	0.029	6.25	753,188	303,000	210.4	220.0	33.8	33.8	2.50	-8
25	56,394	307,000	213.2	225	1.227	36.3	7.5	yes	0.031	0.048	0.029	6.23	753,493	305,000	211.8	225.0	33.9	33.9	2.47	6
26	56,696	302,000	209.7	225	1.210	36.7	7.5	yes	0.031	0.048	0.028	6.22	753,797	304,000	211.1	223.0	33.8	33.8	2.59	1
27	57,007	311,000	216.0	225	1.379	37.2	7.5	yes	0.031	0.048	0.028	6.21	754,111	314,000	218.1	227.0	34.0	34.0	1.71	-1
28	57,307	300,000	208.3	225	1.575	36.5	7.5	yes	0.030	0.048	0.028	6.21	754,411	300,000	208.3	225.0	34.0	34.0	1.66	-14
29	57,606	299,000	207.6	225	1.349	36.5	7.5	yes	0.032	0.049	0.031	6.22	754,715	304,000	211.1	220.0	33.9	33.9	1.92	-5
30	57,912	306,000	212.5	225	1.634	36.7	7.5	yes	0.032	0.051	0.030	6.22	755,023	308,000	213.9	223.0	33.8	33.8	2.43	-1
31																				
TOTALS	#####												9243000							
AVERAGE	######		212.5	225.2	1.140	37.32			0.037	0.054	0.035	6.22	308,100		214.0	220.3	34.9	34.9	1.81	4
MAXIMUM	322000		224	230	1.634	38.30			0.238	0.299	0.226	6.27	329000		228.5	233.0	35.8	35.9	3.44	21
MINIMUM	288000		200	225	0.976	36.30			0.028	0.042	0.026	6.17	283000		196.5	118.0	33.8	33.8	1.17	-20

December 2008

Date	Raw							Static Mixer Flush	Filters				Filter Effluent						Cl-17	Outside Temperature
	Meter Reading	Raw Flow	Flow	Meter	Turb.	Temp.	DL Pump		#1	#2	Comb.	pH	Meter Reading	Filter Effluen	Flow	Meter	Old Res.	New Res.	(mg/L)	
	57,912	(gal)	(gpm)	(gpm)	(NTU)	(deg. F)			(NTU)	(NTU)	(NTU)		755,023	(gal)	(gpm)	(gpm)	(ft)	(ft)		
1	58,214	302,000	209.7	220	1.916	36.1	7.5	yes	0.033	0.051	0.029	6.21	755,323	300,000	208.3	225.0	33.4	33.4	1.68	
2	58,518	304,000	211.1	225	1.944	36.5	7.5	yes	0.030	0.050	0.029	6.22	755,623	300,000	208.3	223.0	33.8	33.8	2.69	-3
3	58,824	306,000	212.5	225	1.456	36.0	7.5	yes	0.031	0.054	0.032	6.21	755,929	306,000	212.5	232.0	33.9	33.9	2.50	-13
4	59,138	314,000	218.1	225	1.491	35.6	7.5	yes	0.030	0.051	0.029	6.20	756,240	311,000	216.0	226.0	32.4	32.3	2.25	0
5	59,449	311,000	216.0	225	1.430	36.1	7.5	yes	0.155	0.050	0.030	6.21	756,546	306,000	212.5	123.0	32.4	32.4	2.15	1
6	59,761	312,000	216.7	225	1.286	35.6	7.5	yes	0.029	0.035	0.030	6.18	756,860	314,000	218.1	224.0	32.1	32.1	1.89	-8
7	60,070	309,000	214.6	225	1.375	35.6	7.5	yes	0.031	0.038	0.033	6.22	757,172	312,000	216.7	225.0	30.9	31.0	1.64	-12
8	60,379	309,000	214.6	225	1.392	36.0	7.5	yes	0.031	0.060	0.038	6.22	757,479	307,000	213.2	222.0	29.7	29.8	1.83	5
9	60,691	312,000	216.7	225	1.349	35.8	7.5	yes	0.033	0.061	0.035	6.21	757,792	313,000	217.4	231.0	29.4	29.5	2.63	2
10	61,005	314,000	218.1	225	2.098	36.0	7.5	yes	0.032	0.059	0.037	6.22	758,111	319,000	221.5	128.0	28.7	28.8	1.87	5
11	61,314	309,000	214.6	225	1.569	36.9	7.5	yes	0.032	0.064	0.036	6.21	758,420	309,000	214.6	227.0	28.5	28.6	1.77	5
12	61,634	320,000	222.2	235	1.626	36.3	7.5	yes	0.033	0.065	0.038	6.20	758,743	323,000	224.3	231.0	28.4	28.5	1.68	4
13	61,957	323,000	224.3	235	1.729	36.3	7.5	yes	0.031	0.061	0.034	6.18	759,063	320,000	222.2	233.0	28.3	28.5	2.23	17
14	62,279	322,000	223.6	235	1.809	36.5	7.5	yes	0.032	0.062	0.035	6.18	759,382	319,000	221.5	236.0	28.2	28.3	2.25	13
15	62,602	323,000	224.3	235	1.820	36.7	7.5	yes	0.032	0.063	0.036	6.18	759,703	321,000	222.9	233.0	27.9	28.0	2.34	20
16	62,923	321,000	222.9	240	2.401	36.5	7.5	yes	0.033	0.062	0.036	6.19	760,024	321,000	222.9	236.0	27.8	27.9	1.65	1
17	63,250	327,000	227.1	240	3.657	36.3	7.5	yes	0.033	0.066	0.037	6.18	760,345	321,000	222.9	236.0	27.8	27.9	1.93	15
18	63,580	330,000	229.2	240	4.920	36.1	7.5	yes	0.030	0.056	0.032	6.16	760,683	338,000	234.7	243.0	27.9	28.0	1.88	22
19	63,909	329,000	228.5	240	6.313	36.9	7.5	yes	0.031	0.059	0.034	6.16	761,019	336,000	233.3	240.0	28.0	28.1	2.02	24
20	64,245	336,000	233.3	240	4.833	36.9	7.5	yes	0.031	0.060	0.034	6.17	761,355	336,000	233.3	242.0	28.0	28.1	2.28	3
21	64,579	334,000	231.9	240	7.565	36.7	7.5	yes	0.031	0.060	0.033	6.17	761,689	334,000	231.9	243.0	28.1	28.2	1.74	14
22	64,906	327,000	227.1	240	6.312	36.3	7.5	yes	0.034	0.060	0.035	6.17	762,023	334,000	231.9	240.0	28.6	28.7	1.92	15
23	65,219	313,000	217.4	240	9.248	36.7	7.5	yes	0.032	0.062	0.035	6.17	762,334	311,000	216.0	241.0	28.7	28.8	1.76	16
24	65,553	334,000	231.9	245	2.706	36.0	7.5	yes	0.031	0.059	0.034	6.17	762,669	335,000	232.6	242.0	29.2	29.3	2.03	8
25	65,888	335,000	232.6	245	2.322	35.8	7.5	yes	0.032	0.061	0.035	6.18	763,004	335,000	232.6	243.0	30.0	30.0	2.33	12
26	66,218	330,000	229.2	245	2.063	35.6	7.5	yes	0.032	0.062	0.038	6.17	763,331	327,000	227.1	238.0	30.6	30.6	2.73	-4
27	66,551	333,000	231.3	245	2.083	35.2	7.5	yes	0.031	0.059	0.034	6.19	763,664	333,000	231.3	239.0	30.8	30.9	2.01	-1
28	66,882	331,000	229.9	245	2.955	35.2	7.5	yes	0.031	0.060	0.034	6.18	764,004	340,000	236.1	242.0	31.3	31.3	2.26	-11
29	67,215	333,000	231.3	245	4.519	35.1	7.5	yes	0.031	0.058	0.033	6.18	764,336	332,000	230.6	240.0	31.6	31.6	1.77	-14
30	67,544	329,000	228.5	245	6.776	34.7	7.5	yes	0.032	0.061	0.034	6.18	764,670	334,000	231.9	243.0	32.0	32.0	2.91	-14
31	67,877	333,000	231.3	245	1.249	34.9	7.5	yes	0.031	0.061	0.034	6.18	765,005	335,000	232.6	244.0	32.5	32.5	2.27	-20
TOTALS	#####													9982000						
AVERAGE	######		223.2	235.2	3.039	36.03			0.036	0.058	0.034	6.19		322,000	223.6	228.1	30.0	30.1	2.09	3
MAXIMUM	336000		233	245	9.248	36.90			0.155	0.066	0.038	6.22		340000	236.1	244.0	33.9	33.9	2.91	24
MINIMUM	304000		211	225	1.249	34.70			0.029	0.035	0.029	6.16		300000	208.3	123.0	27.8	27.9	1.64	-20

January 2009

Date	Raw							Static Mixer Flush	Filters				Filter Effluent						Cl-17	Temperature
	Meter Reading	Raw Flow	Flow	Meter	Turb.	Temp.	DL Pump		#1	#2	Comb.	pH	Meter Reading	Filter Effluent	Flow	Meter	Old Res.	New Res.	(mg/L)	Outside
	67,877	(gal)	(gpm)	(gpm)	(NTU)	(deg. F)			(NTU)	(NTU)	(NTU)		765,005	(gal)	(gpm)	(gpm)	(ft)	(ft)		
1	68,211	334,000	231.9	245	1.859	34.5	7.5	yes	0.032	0.063	0.036	6.18	765,334	329,000	228.5	243.0	33.0	33.0	2.78	-11
2	68,540	329,000	228.5	245	2.544	34.5	7.5	yes	0.032	0.062	0.035	6.18	765,662	328,000	227.8	241.0	33.5	33.5	2.80	-30
3	68,870	330,000	229.2	245	4.870	34.2	7.5	yes	0.032	0.061	0.034	6.18	766,000	338,000	234.7	240.0	34.1	34.1	2.40	-32
4	69,199	329,000	228.5	245	1.533	34.5	7.5	yes	0.038	0.063	0.071	6.17	766,327	327,000	227.1	241.0	34.3	34.3	2.03	-8
5	69,529	330,000	229.2	245	1.495	34.5	7.5	yes	0.031	0.050	0.024	6.10	766,659	332,000	230.6	240.0	34.2	34.2	2.16	-15
6	69,859	330,000	229.2	245	1.461	34.5	7.5	yes	0.031	0.051	0.027	6.10	766,996	337,000	234.0	240.0	34.5	34.4	2.28	-30
7	70,188	329,000	228.5	245	1.371	34.0	7.5	yes	0.031	0.051	0.027	6.10	767,329	333,000	231.3	239.0	34.6	34.6	2.04	-30
8	70,516	328,000	227.8	245	1.361	34.0	7.5	yes	0.031	0.049	0.025	6.10	767,662	333,000	231.3	240.0	34.8	34.8	2.22	-33
9	70,842	326,000	226.4	245	1.365	34.2	7.5	yes	0.032	0.050	0.026	6.09	767,986	324,000	225.0	240.0	34.9	34.8	1.85	-28
10	71,174	332,000	230.6	245	1.381	34.0	7.5	yes	0.033	0.056	0.032	6.21	768,323	337,000	234.0	235.0	35.4	35.3	1.95	-34
11	71,500	326,000	226.4	245	1.351	34.0	7.5	yes	0.033	0.058	0.029	6.20	768,652	329,000	228.5	240.0	35.5	35.4	2.36	-28
12	71,828	328,000	227.8	245	1.382	34.2	7.5	yes	0.033	0.058	0.028	6.20	768,972	320,000	222.2	237.0	35.4	35.3	1.91	-16
13	72,158	330,000	229.2	245	1.363	34.2	7.5	yes	0.035	0.059	0.029	6.20	769,298	326,000	226.4	235.0	35.1	35.0	2.92	4
14	72,481	323,000	224.3	245	1.358	34.2	7.5	yes	0.035	0.061	0.031	6.21	769,620	322,000	223.6	235.0	35.1	35.0	1.80	12
15	72,809	328,000	227.8	245	2.595	34.7	7.5	yes	0.035	0.062	0.030	6.20	769,943	323,000	224.3	237.0	34.8	34.8	2.86	8
16	73,132	323,000	224.3	245	1.513	34.9	7.5	yes	0.035	0.061	0.028	6.19	770,263	320,000	222.2	235.0	35.0	34.9	1.69	-5
17	73,462	330,000	229.2	235	1.498	34.9	7.5	yes	0.040	0.114	0.050	6.19	770,595	332,000	230.6	237.0	34.8	34.7	1.68	20
18	73,789	327,000	227.1	240	1.391	34.2	7.5	yes	0.035	0.062	0.032	6.20	770,925	330,000	229.2	236.0	33.6	33.6	1.77	-5
19	74,112	323,000	224.3	240	1.540	33.8	7.5	yes	0.035	0.063	0.026	6.19	771,256	331,000	229.9	236.0	33.2	33.2	1.71	-8
20	74,436	324,000	225.0	240	1.774	34.2	7.5	yes	0.034	0.064	0.021	6.20	771,580	324,000	225.0	235.0	32.8	32.7	1.19	-17
21	74,764	328,000	227.8	240	1.555	34.2	7.5	yes	0.035	0.067	0.021	6.22	771,907	327,000	227.1	237.0	32.6	32.6	2.90	5
22	75,086	322,000	223.6	240	1.529	34.0	7.5	yes	0.032	0.059	0.018	6.21	772,226	319,000	221.5	234.0	32.1	32.1	2.70	-18
23	75,413	327,000	227.1	240	1.559	34.0	7.5	yes	0.034	0.062	0.018	6.22	772,559	333,000	231.3	236.0	31.8	31.8	2.76	7
24	75,735	322,000	223.6	240	1.576	34.1	7.5	yes	0.033	0.059	0.021	6.22	772,884	325,000	225.7	236.0	32.1	32.1	2.58	-1
25	76,057	322,000	223.6	240	1.692	34.5	7.5	yes	0.035	0.065	0.020	6.22	773,210	326,000	226.4	236.0	31.5	31.6	2.60	-11
26	76,380	323,000	224.3	240	2.719	35.6	7.5	yes	0.034	0.062	0.018	6.21	773,535	325,000	225.7	230.0	31.1	31.2	2.35	-7
27	76,700	320,000	222.2	240	3.389	36.1	7.5	yes	0.031	0.056	0.015	6.18	773,851	316,000	219.4	232.0	30.8	30.9	1.76	-15
28	77,028	328,000	227.8	240	3.078	36.1	7.5	yes	0.032	0.058	0.018	6.18	774,185	334,000	231.9	237.0	30.7	30.7	1.53	-11
29	77,361	333,000	231.3	250	2.829	35.4	7.5	yes	0.033	0.059	0.019	6.17	774,516	331,000	229.9	244.0	30.2	30.2	1.35	-25
30	77,698	337,000	234.0	250	2.627	35.6	7.5	yes	0.035	0.062	0.017	6.16	774,850	334,000	231.9	244.0	29.9	30.0	1.35	-23
31	78,038	340,000	236.1	250	2.486	35.2	7.5	yes	0.034	0.058	0.018	6.16	775,189	339,000	235.4	240.0	29.7	29.8	2.42	-17
TOTALS		10,161,000												10184000						
AVERAGE		327,774.2	227.6	243.4	1.937	34.55			0.034	0.061	0.027	6.18		328,516	228.1	237.7	33.3	33.2	2.15	-13
MAXIMUM		340000	236	250	4.870	36.10			0.040	0.114	0.071	6.22		339000	235.4	244.0	35.5	35.4	2.92	20
MINIMUM		320000	222	235	1.351	33.80			0.031	0.049	0.015	6.09		316000	219.4	230.0	29.7	29.8	1.19	-34

February 2009

Date	Raw							Static Mixer Flush	Filters				Filter Effluent						Cl-17	Temperature
	Meter Reading	Raw Flow	Flow	Meter	Turb.	Temp.	DL Pump		#1	#2	Comb.	pH	Meter Reading	Filter Effluent	Flow	Meter	Old Res.	New Res.	(mg/L)	Outside
	78,038	(gal)	(gpm)	(gpm)	(NTU)	(deg. F)			(NTU)	(NTU)	(NTU)		775,189	(gal)	(gpm)	(gpm)	(ft)	(ft)		
1	78,373	335,000	232.6	250	2.418	35.1	7.5	yes	0.034	0.063	0.018	6.15	775,534	345,000	239.6	246.0	29.6	29.7	2.49	-25
2	78,703	330,000	229.2	250	2.328	35.1	7.5	yes	0.034	0.060	0.018	6.16	775,874	340,000	236.1	243.0	29.3	29.3	2.53	-30
3	79,042	339,000	235.4	250	2.268	35.1	7.5	yes	0.035	0.063	0.020	6.15	776,217	343,000	238.2	243.0	29.2	29.3	2.52	-36
4	79,381	339,000	235.4	250	2.426	35.2	15	yes	0.037	0.064	0.019	6.15	776,556	339,000	235.4	240.0	29.0	29.0	2.39	-35
5	79,712	331,000	229.9	250	2.498	35.2	15	yes	0.034	0.056	0.023	6.16	776,894	338,000	234.7	245.0	29.3	29.4	2.12	-27
6	80,052	340,000	236.1	250	2.433	35.4	15	yes	0.034	0.060	0.019	6.15	777,241	347,000	241.0	244.0	29.3	29.4	2.23	2
7	80,385	333,000	231.3	250	3.446	35.2	15	yes	0.036	0.060	0.020	6.15	777,582	341,000	236.8	244.0	29.6	29.7	2.16	-10
8	80,718	333,000	231.3	250	2.555	35.1	15	yes	0.036	0.064	0.020	6.16	777,925	343,000	238.2	245.0	29.8	29.9	2.15	-22
9	81,050	332,000	230.6	250	2.546	35.1	15	yes	0.034	0.064	0.019	6.13	778,265	340,000	236.1	239.0	29.5	29.6	1.99	-32
10	81,381	331,000	229.9	250	2.637	34.9	15	yes	0.034	0.063	0.018	6.14	778,602	337,000	234.0	239.0	29.4	29.4	2.00	-36
11	81,713	332,000	230.6	250	2.728	34.1	15	yes	0.035	0.063	0.019	6.15	778,943	341,000	236.8	236.0	29.6	29.7	2.30	-28
12	82,053	340,000	236.1	250	2.225	34.7	15	yes	0.035	0.063	0.019	6.10	779,283	340,000	236.1	242.0	29.8	29.9	2.20	-21
13	82,395	342,000	237.5	250	2.584	35.2	15	yes	0.037	0.064	0.019	6.15	779,629	346,000	240.3	246.0	30.2	30.2	2.39	18
14	82,734	339,000	235.4	250	2.498	34.5	15	yes	0.036	0.065	0.020	6.14	779,970	341,000	236.8	243.0	30.5	30.5	2.45	18
15	83,072	338,000	234.7	250	2.408	34.5	15	yes	0.037	0.070	0.022	6.19	780,310	340,000	236.1	243.0	30.9	31.0	2.52	-7
16	83,409	337,000	234.0	250	2.355	34.7	15	yes	0.037	0.067	0.021	6.17	780,651	341,000	236.8	247.0	31.2	31.2	2.30	-17
17	83,746	337,000	234.0	250	2.670	34.5	15	yes	0.033	0.063	0.019	6.15	780,998	347,000	241.0	246.0	31.5	31.6	2.42	-33
18	84,084	338,000	234.7	250	3.068	34.5	15	yes	0.038	0.067	0.036	6.15	781,341	343,000	238.2	243.0	31.9	31.9	2.38	18
19	84,421	337,000	234.0	250	3.281	34.7	15	yes	0.039	0.070	0.034	6.15	781,684	343,000	238.2	249.0	31.9	31.9	2.22	18
20	84,763	342,000	237.5	250	3.136	34.7	15	yes	0.038	0.071	0.027	6.12	782,032	348,000	241.7	248.0	32.1	32.1	2.31	-15
21	85,103	340,000	236.1	250	3.088	34.5	15	yes	0.038	0.070	0.025	6.14	782,381	349,000	242.4	244.0	32.5	32.6	2.35	-17
22	85,411	308,000	213.9	200	2.881	34.7	15	yes	0.036	0.065	0.022	6.18	782,697	316,000	219.4	189.0	32.5	32.5	2.25	11
23	85,656	245,000	170.1	175	2.874	34.9	15	yes	0.036	0.067	0.023	6.22	782,947	250,000	173.6	153.0	31.4	31.4	2.41	28
24	85,929	273,000	189.6	220	2.762	34.2	15	yes	0.034	0.059	0.022	6.18	783,227	280,000	194.4	140.0	30.7	30.7	2.30	15
25	86,240	311,000	216.0	190	2.536	34.5	15	yes	0.037	0.064	0.025	6.22	783,535	308,000	213.9	186.0	30.3	30.4	2.14	19
26	86,563	323,000	224.3	250	2.832	33.9	15	yes	0.046	0.088	0.040	6.17	783,862	327,000	227.1	245.0	30.4	30.5	2.45	-8
27	86,905	342,000	237.5	255	2.749	34.2	15	yes	0.041	0.076	0.033	6.17	784,211	349,000	242.4	254.0	30.7	30.7	2.10	-3
28	87,181	276,000	191.7	255	3.287	34.2	15	yes	0.044	0.087	0.040	6.17	784,493	282,000	195.8	250.0	30.3	30.3	1.90	15
29																				
30																				
31																				
TOTALS		9,143,000												9304000						
AVERAGE		326,535.7	226.8	242.7	2.697	34.74			0.037	0.066	0.024	6.16		332,286	230.8	233.3	30.4	30.5	2.28	-9
MAXIMUM		342000	238	255	3.446	35.40			0.046	0.088	0.040	6.22		349000	242.4	254.0	32.5	32.6	2.53	28
MINIMUM		245000	170	175	2.225	33.90			0.033	0.056	0.018	6.10		250000	173.6	140.0	29.0	29.0	1.90	-36

March 2009

Date	Raw							Static Mixer Flush	Filters				Filter Effluent						Cl-17	Temperature
	Meter Reading	Raw Flow	Flow	Meter	Turb.	Temp.	DL Pump		#1	#2	Comb.	pH	Meter Reading	Filter Effluent	Flow	Meter	Old Res.	New Res.	(mg/L)	Outside
	87,181	(gal)	(gpm)	(gpm)	(NTU)	(deg. F)			(NTU)	(NTU)	(NTU)		784,493	(gal)	(gpm)	(gpm)	(ft)	(ft)		
1	87,528	347,000	241.0	260	3.042	34.0	15	yes	0.044	0.089	0.044	6.14	784,849	356,000	247.2	252.0	30.8	30.8	1.99	-11
2	87,878	350,000	243.1	260	3.105	33.8	15	yes	0.043	0.086	0.038	6.16	785,204	355,000	246.5	251.0	31.3	31.4	2.08	-21
3	88,224	346,000	240.3	260	3.084	34.0	15	yes	0.044	0.090	0.037	6.15	785,561	357,000	247.9	250.0	31.9	31.9	1.98	0
4	88,571	347,000	241.0	260	3.065	33.4	15	yes	0.037	0.068	0.031	6.07	785,919	358,000	248.6	251.0	32.6	32.6	1.97	-1
5	88,917	346,000	240.3	260	4.434	33.4	15	yes	0.039	0.072	0.031	6.08	786,274	355,000	246.5	260.0	33.7	33.6	2.07	15
6	89,274	357,000	247.9	260	3.625	33.8	15	yes	0.038	0.071	0.033	6.08	786,638	364,000	252.8	255.0	34.5	34.4	1.94	0
7	89,594	320,000	222.2	240	3.250	33.3	15	yes	0.038	0.081	0.034	6.10	786,974	336,000	233.3	232.0	35.3	35.2	2.20	-14
8	89,882	288,000	200.0	220	3.608	33.1	15	yes	0.039	0.081	0.030	6.14	787,273	299,000	207.6	217.0	35.7	35.6	2.09	1
9	90,184	302,000	209.7	220	3.734	33.1	15	yes	0.038	0.077	0.032	6.14	787,587	314,000	218.1	218.0	36.1	36.0	1.77	12
10	90,481	297,000	206.3	220	3.841	33.1	15	yes	0.039	0.080	0.031	6.15	787,893	306,000	212.5	214.0	36.2	36.1	2.39	15
11	90,782	301,000	209.0	220	4.072	34.3	7.5	yes	0.038	0.077	0.029	6.13	788,203	310,000	215.3	214.0	36.3	36.2	2.35	13
12	91,076	294,000	204.2	220	5.037		7.5	yes	0.039	0.082	0.034	6.13	788,506	303,000	210.4	215.0	36.5	36.3	2.36	12
13	91,368	292,000	202.8	210	4.839	33.8	7.5	yes	0.037	0.074	0.027	6.13	788,808	302,000	209.7	212.0	36.5	36.4	2.42	5
14	91,644	276,000	191.7	200	4.600	33.6	7.5	yes	0.037	0.073	0.029	6.11	789,098	290,000	201.4	200.0	36.4	36.3	2.54	-10
15	91,919	275,000	191.0	205	4.684	33.4	7.5	yes	0.034	0.067	0.027	6.08	789,383	285,000	197.9	201.0	36.0	35.9	2.58	-23
16	92,189	270,000	187.5	205	4.799	33.6	7.5	yes	0.034	0.068	0.025	6.10	789,657	274,000	190.3	198.0	35.3	35.2	2.51	-8
17	92,466	277,000	192.4	245	6.376	33.6	7.5	yes	0.035	0.070	0.026	6.16	789,940	283,000	196.5	222.0	33.6	33.5	2.54	-13
18	92,795	329,000	228.5	245	5.286	33.6	7.5	yes	0.034	0.064	0.026	6.07	790,282	342,000	237.5	238.0	33.7	33.7	2.02	-9
19	93,126	331,000	229.9	220	5.359	33.6	7.5	yes	0.034	0.064	0.023	6.07	790,624	342,000	237.5	233.0	34.3	34.2	2.05	-15
20	93,426	300,000	208.3	220	5.280	33.4	7.5	yes	0.034	0.067	0.027	6.12	790,931	307,000	213.2	220.0	33.6	33.6	2.00	-18
21	93,725	299,000	207.6	220	5.461	33.4	7.5	yes	0.033	0.064	0.030	6.10	791,240	309,000	214.6	214.0	33.7	33.6	2.08	-23
22	94,024	299,000	207.6	220	5.488	33.3	7.5	yes	0.034	0.064	0.025	6.02	791,545	305,000	211.8	213.0	33.8	33.7	1.87	-6
23	94,319	295,000	204.9	220	5.353	33.3	7.5	yes	0.037	0.078	0.035	6.01	791,851	306,000	212.5	220.0	33.5	33.4	1.99	-2
24	94,619	300,000	208.3	220	5.656	33.3	7.5	yes	0.034	0.065	0.023	6.02	792,160	309,000	214.6	217.0	33.6	33.6	2.09	2
25	94,917	298,000	206.9	220	5.744	33.1	7.5	yes	0.040	0.400	0.036	6.01	792,460	300,000	208.3	106.0	33.2	33.2	2.05	-7
26	95,214	297,000	206.3	220	6.152	33.3	7.5	yes	0.033	0.048	0.028	6.07	792,757	297,000	206.3	211.0	33.1	33.1	2.16	-12
27	95,504	290,000	201.4	220	7.267	33.3	7.5	yes	0.033	0.046	0.024	6.08	793,052	295,000	204.9	209.0	32.7	33.7	2.32	-12
28	95,807	303,000	210.4	220	8.576	33.4	7.5	yes	0.034	0.050	0.028	6.04	793,360	308,000	213.9	221.0	32.8	32.8	1.99	-9
29	96,108	301,000	209.0	220	9.253	33.4	7.5	yes	0.033	0.047	0.023	6.04	793,668	308,000	213.9	220.0	32.8	32.8	1.90	4
30	96,411	303,000	210.4	220	11.100	33.4	7.5	yes	0.030	0.086	0.032	6.04	793,968	300,000	208.3	219.0	32.4	32.4	1.80	15
31	96,711	300,000	208.3	220	11.360	33.4	7.5	yes	0.028	0.037	0.025	6.04	794,280	312,000	216.7	107.0	32.7	32.7	1.81	-1
TOTALS		9,530,000												9787000						
AVERAGE		307,419.4	213.5	228.1	5.372	33.48			0.036	0.080	0.030	6.09		315,710	219.2	216.5	34.0	34.0	2.13	-4
MAXIMUM		357000	248	260	11.360	34.30			0.044	0.400	0.044	6.16		364000	252.8	260.0	36.5	36.4	2.58	15
MINIMUM		270000	188	200	3.065	33.10			0.028	0.037	0.023	6.01		274000	190.3	106.0	31.3	31.4	1.77	-23

April 2009

Date	Raw							Static Mixer Flush	Filters				Filter Effluent						Cl-17	Outside Temperature
	Meter Reading	Raw Flow	Flow	Meter	Turb.	Temp.	DL Pump		#1	#2	Comb.	pH	Meter Reading	Filter Effluent	Flow	Meter	Old Res.	New Res.	(mg/L)	
	96,711	(gal)	(gpm)	(gpm)	(NTU)	(deg. F)			(NTU)	(NTU)	(NTU)		794,280	(gal)	(gpm)	(gpm)	(ft)	(ft)		
1	97,010	299,000	207.6	210	11.69	33.4	7.5	yes	0.034	0.054	0.036	6.02	794,579	299,000	207.6	129.0	32.6	32.6	1.92	-2
2	97,292	282,000	195.8	210	11.86	33.1	7.5	yes	0.026	0.039	0.027	6.02	794,871	292,000	202.8	206.0	32.3	32.3	1.96	-9
3	97,579	287,000	199.3	210	12.50	33.4	7.5	yes	0.025	0.036	0.022	6.03	795,157	286,000	198.6	203.0	32.0	32.0	1.82	-10
4	97,861	282,000	195.8	210	12.54	33.4	7.5	yes	0.026	0.039	0.026	6.02	795,436	279,000	193.8	208.0	31.8	31.9	1.84	-10
5	98,169	308,000	213.9	225	14.01	33.1	7.5	yes	0.027	0.039	0.022	6.00	795,746	310,000	215.3	226.0	32.0	32.0	2.41	-2
6	98,474	305,000	211.8	225	12.84	33.4	7.5	yes	0.027	0.039	0.025	6.01	796,069	323,000	224.3	228.0	31.6	31.8	2.08	7
7	98,787	313,000	217.4	220	13.12	33.1	7.5	yes	0.027	0.044	0.028	6.04	796,366	297,000	206.3	218.0	31.7	31.7	2.26	19
8	99,089	302,000	209.7	220	13.65	33.3	7.5	yes	0.028	0.043	0.029	6.03	796,671	305,000	211.8	221.0	31.3	31.6	2.27	12
9	99,393	304,000	211.1	220	12.12	33.3	7.5	yes	0.027	0.044	0.029	6.02	796,971	300,000	208.3	220.0	31.6	31.9	2.28	7
10	99,696	303,000	210.4	220	12.43	33.1	7.5	yes	0.026	0.040	0.025	6.05	797,264	293,000	203.5	213.0	31.3	31.3	2.23	-3
11	100,008	312,000	216.7	230	13.31	33.4	7.5	yes	0.027	0.042	0.027	6.10	797,572	308,000	213.9	230.0	31.6	31.6	2.37	3
12	100,322	314,000	218.1	230	12.19	33.3	7.5	yes	0.027	0.041	0.028	6.06	797,880	308,000	213.9	228.0	31.6	31.6	2.20	9
13	100,641	319,000	221.5	230	12.44	33.3	7.5	yes	0.027	0.068	0.034	6.05	798,180	300,000	208.3	226.0	31.0	31.0	1.82	0
14	100,956	315,000	218.8	230	13.65	33.3	15	yes	0.028	0.044	0.029	6.02	798,498	318,000	220.8	229.0	31.2	31.2	1.64	-3
15	101,277	321,000	222.9	235	14.14	33.3	15	yes	0.027	0.045	0.029	6.02	798,804	306,000	212.5	227.0	31.0	31.0	1.54	-1
16	101,594	317,000	220.1	235	14.07	33.3	15	yes	0.029	0.045	0.035	6.03	799,115	311,000	216.0	227.0	30.9	30.9	1.59	-3
17	101,912	318,000	220.8	245	13.44	33.4	15	yes	0.027	0.043	0.040	6.03	799,417	302,000	209.7	227.0	30.5	30.6	1.77	11
18	102,232	320,000	222.2	235	13.66	33.3	15	yes	0.027	0.039	0.047	6.05	799,742	325,000	225.7	233.0	30.6	30.7	1.83	9
19	102,551	319,000	221.5	240	13.67	33.3	15	yes	0.027	0.043	0.047	6.07	800,052	310,000	215.3	224.0	30.7	30.7	1.86	6
20	102,865	314,000	218.1	240	13.91	33.3	15	yes	0.028	0.044	0.048	6.04	800,365	313,000	217.4	225.0	30.6	30.6	1.96	3
21	103,183	318,000	220.8	235	13.45	33.3	15	yes	0.027	0.042	0.046	6.06	800,668	303,000	210.4	221.0	30.2	30.3	2.01	6
22	103,501	318,000	220.8	235	12.84	33.3	15	yes	0.027	0.044	0.037	6.04	800,987	319,000	221.5	230.0	30.1	30.2	1.69	21
23	103,817	316,000	219.4	235	12.29	33.3	15	yes	0.027	0.042	0.027	6.06	801,294	307,000	213.2	227.0	30.1	30.1	1.96	31
24	104,144	327,000	227.1	240	12.23	33.1	15	yes	0.028	0.041	0.030	6.05	801,620	326,000	226.4	235.0	30.2	30.3	2.09	28
25	104,470	326,000	226.4	240	12.24	33.4	15	yes	0.028	0.043	0.031	6.05	801,930	310,000	215.3	233.0	30.3	30.3	2.09	31
26	104,801	331,000	229.9	240	11.59	33.1	15	yes	0.027	0.038	0.033	6.03	802,251	321,000	222.9	235.0	30.1	30.1	2.28	36
27	105,128	327,000	227.1	250	11.50	33.1	15	yes	0.027	0.046	0.033	6.04	802,567	316,000	219.4	233.0	29.9	30.0	2.28	34
28	105,470	342,000	237.5	250	10.81	33.3	15	yes	0.029	0.039	0.031	6.09	802,908	341,000	236.8	237.0	30.3	30.6	1.88	33
29	105,806	336,000	233.3	250	10.18	33.3	15	yes	0.027	0.038	0.031	6.07	803,254	346,000	240.3	240.0	30.8	30.8	1.91	35
30	106,146	340,000	236.1	250	9.95	33.6	15	yes	0.029	0.043	0.034	6.07	803,600	346,000	240.3	243.0	31.1	31.1	1.99	38
31																				
TOTALS		9,435,000												9320000						
AVERAGE		314,500.0	218.4	231.5	12.611	33.29			0.027	0.043	0.032	6.04		310,667	215.7	222.7	31.0	31.1	1.99	11
MAXIMUM		342000	238	250	14.140	33.60			0.034	0.068	0.048	6.10		346000	240.3	243.0	32.6	32.6	2.41	38
MINIMUM		282000	196	210	9.953	33.10			0.025	0.036	0.022	6.00		279000	193.8	203.0	29.9	30.0	1.54	-10

May 2009

Date	Raw							Static Mixer Flush	Filters				Filter Effluent						Cl-17	Temperature
	Meter Reading	Raw Flow	Flow	Meter	Turb.	Temp.	DL Pump		#1	#2	Comb.	pH	Meter Reading	Filter Effluent	Flow	Meter	Old Res.	New Res.	(mg/L)	Outside
	106,146	(gal)	(gpm)	(gpm)	(NTU)	(deg. F)			(NTU)	(NTU)	(NTU)		803,600	(gal)	(gpm)	(gpm)	(ft)	(ft)		
1	106,488	342,000	237.5	250	10.31	34.0	15	yes	0.027	0.042	0.033	6.09	803,945	345,000	239.6	246.0	31.5	31.5	2.14	35
2	106,830	342,000	237.5	250	9.731	33.4	15	yes	0.027	0.038	0.030	5.99	804,291	346,000	240.3	245.0	31.9	31.9	2.27	27
3	107,176	346,000	240.3	250	8.746	33.8	15	yes	0.026	0.036	0.026	5.97	804,630	339,000	235.4	248.0	32.5	32.1	2.08	32
4	107,522	346,000	240.3	250	8.649	34.2	15	yes	0.026	0.037	0.032	5.98	804,970	340,000	236.1	242.0	32.8	32.8	2.39	23
5	107,862	340,000	236.1	250	8.975	33.8	15	yes	0.027	0.042	0.031	6.00	805,320	350,000	243.1	245.0	33.5	33.5	2.55	27
6	108,204	342,000	237.5	225	6.36	34.2	15	yes	0.032	0.055	0.041	6.04	805,667	347,000	241.0	236.0	34.3	34.2	2.55	20
7	108,512	308,000	213.9	225	6.01	34.2	7.5	yes	0.028	0.050	0.033	6.03	805,981	314,000	218.1	197.0	34.8	34.7	2.83	30
8	108,826	314,000	218.1	210	6.41	34.0	7.5	yes	0.030	0.051	0.037	6.98	806,298	317,000	220.1	220.0	35.2	35.1	2.63	32
9	109,116	290,000	201.4	210	7.50	33.8	7.5	yes	0.032	0.053	0.040	6.04	806,594	296,000	205.6	207.0	35.6	35.5	2.24	30
10	109,391	275,000	191.0	200	10.87	34.0	7.5	yes	0.031	0.048	0.037	6.07	806,872	278,000	193.1	194.0	35.5	35.4	1.86	32
11	109,665	274,000	190.3	200	12.72	34.5	7.5	yes	0.029	0.048	0.036	6.08	807,151	279,000	193.8	189.0	35.4	35.3	1.76	30
12	109,936	271,000	188.2	200	6.646	34.2	7.5	yes	0.031	0.053	0.039	6.03	807,430	279,000	193.8	195.0	35.4	35.3	1.74	28
13	110,202	266,000	184.7	200	7.053	34.7	7.5	yes	0.030	0.048	0.035	6.06	807,702	272,000	188.9	188.0	35.3	35.2	1.87	29
14	110,471	269,000	186.8	200	7.145	34.5	7.5	yes	0.029	0.046	0.034	6.05	807,977	275,000	191.0	195.0	35.3	35.2	1.93	27
15	110,736	265,000	184.0	200	8.415	35.1	7.5	yes	0.029	0.045	0.034	6.05	808,242	265,000	184.0	190.0	35.3	35.2	1.93	29
16	110,999	263,000	182.6	195	7.505	34.9	7.5	yes	0.028	0.047	0.032	6.01	808,512	270,000	187.5	190.0	35.4	35.3	1.95	23
17	111,271	272,000	188.9	195	10.150	35.4	7.5	yes	0.029	0.047	0.034	6.05	808,788	276,000	191.7	187.0	35.5	35.4	2.96	44
18	111,522	251,000	174.3	195	5.480	34.9	7.5	yes	0.027	0.042	0.031	5.99	809,047	259,000	179.9	181.0	35.5	35.4	2.64	35
19	111,784	262,000	181.9	190	3.722	35.1	7.5	yes	0.027	0.045	0.033	5.94	809,308	261,000	181.3	182.0	35.4	35.3	2.87	34
20	112,047	263,000	182.6	195	2.572	35.4	15	yes	0.035	0.064	0.046	5.96	809,577	269,000	186.8	185.0	35.4	35.4	2.73	38
21	112,314	267,000	185.4	195	2.145	35.4	15	yes	0.032	0.055	0.040	5.99	809,849	272,000	188.9	185.0	35.5	35.5	2.34	36
22	112,569	255,000	177.1	195	2.110	35.4	7.5	yes	0.034	0.063	0.046	5.95	810,107	258,000	179.2	183.0	35.6	35.5	2.39	37
23	112,819	250,000	173.6	195	2.294	35.6	7.5	yes	0.030	0.054	0.039	5.96	810,360	253,000	175.7	183.0	35.6	35.5	2.34	33
24	113,075	256,000	177.8	195	2.698	34.9	7.5	yes	0.027	0.047	0.034	5.83	810,616	256,000	177.8	180.0	35.4	35.5	2.63	
25	113,328	253,000	175.7	185	1.440	35.2	7.5	yes	0.028	0.051	0.037	5.77	810,869	253,000	175.7	177.0	35.5	35.4	2.61	33
26	113,578	250,000	173.6	185	1.282	34.5	7.5	yes	0.036	0.072	0.051	5.70	811,123	254,000	176.4	174.0	35.4	35.3	2.58	35
27	113,823	245,000	170.1	180	1.296	33.6	7.5	yes	0.046	0.109	0.073	5.62	811,376	253,000	175.7	176.0	35.2	35.2	2.53	31
28	114,071	248,000	172.2	190	1.476	33.8	7.5	yes	0.026	0.050	0.035	5.56	811,628	252,000	175.0	177.0	35.1	35.0	2.48	32
29	114,322	251,000	174.3	195	1.795	35.4	7.5	yes	0.028	0.051	0.034	5.63	811,876	248,000	172.2	182.0	34.8	34.8	2.04	29
30	114,590	268,000	186.1	195	0.991	34.9	7.5	yes	0.026	0.048	0.036	5.64	812,139	263,000	182.6	190.0	34.8	34.7	2.00	30
31	114,855	265,000	184.0	195	0.957	35.8	7.5	yes	0.027	0.050	0.036	5.63	812,404	265,000	184.0	192.0	34.7	34.7	2.11	28
TOTALS		8,709,000												8804000						
AVERAGE		280,935.5	195.1	206.3	5.595	34.60			0.030	0.051	0.037	5.96		284,000	197.2	198.7	34.8	34.7	2.32	31
MAXIMUM		346000	240	250	12.720	35.80			0.046	0.109	0.073	6.98		350000	243.1	248.0	35.6	35.5	2.96	44
MINIMUM		245000	170	180	0.957	33.40			0.026	0.036	0.026	5.56		248000	172.2	174.0	31.9	31.9	1.74	20

June 2009

Date	Raw							Static Mixer Flush	Filters				Filter Effluent						Cl-17	Temperature
	Meter Reading	Raw Flow	Flow	Meter	Turb.	Temp.	DL Pump		#1	#2	Comb.	pH	Meter Reading	Filter Effluent	Flow	Meter	Old Res.	New Res.	(mg/L)	Outside
	114,855	(gal)	(gpm)	(gpm)	(NTU)	(deg. F)			(NTU)	(NTU)	(NTU)		812,404	(gal)	(gpm)	(gpm)	(ft)	(ft)		
1	115,126	271,000	188.2	185	1.183	38.1	7.5	yes	0.027	0.043	0.034	5.65	812,678	274,000	190.3	186.0	34.7	34.7	1.82	43
2	115,388	262,000	181.9	195	1.490	37.9	7.5	yes	0.031	0.061	0.043	5.54	812,941	263,000	182.6	182.0	34.7	34.6	1.42	48
3	115,647	259,000	179.9	195	0.978	38.3	7.5	yes	0.035	0.072	0.049	5.60	813,202	261,000	181.3	180.0	34.5	34.4	0.98	47
4	115,901	254,000	176.4	190	2.996	39.7	7.5	yes	0.026	0.043	0.036	5.62	813,459	257,000	178.5	180.0	34.3	34.3	1.05	47
5	116,152	251,000	174.3	190	2.841	43.2	7.5	yes	0.025	0.040	0.036	5.63	813,721	262,000	181.9	179.0	34.2	34.1	1.12	55
6	116,403	251,000	174.3	190	5.133	46.4	7.5	yes	0.026	0.044	0.039	5.80	813,965	244,000	169.4	176.0	33.8	33.8	0.87	47
7	116,670	267,000	185.4	205	9.455	46.4	15	yes	0.083	0.149	0.124	8.88	814,155	190,000	131.9	190.0	32.8	32.8	1.45	41
8	116,949	279,000	193.8	214	6.680	48.0	15	yes	0.025	0.041	0.035	6.34	814,435	280,000	194.4	198.0	32.7	32.8	1.33	46
9	117,231	282,000	195.8	215	5.027	50.4	15	yes	0.026	0.033	0.034	6.12	814,717	282,000	195.8	200.0	32.8	32.8	1.43	42
10	117,511	280,000	194.4	205	1.742	50.5	15	yes	0.026	0.037	0.033	5.93	814,991	274,000	190.3	200.0	32.9	33.0	1.56	40
11	117,775	264,000	183.3				7.5	yes	0.026	0.035	0.031	6.47	815,258	267,000	185.4					
12	118,039	264,000	183.3	200	3.592	52.9	7.5	yes	0.026	0.035	0.033	6.47	815,524	266,000	184.7	100.0	32.7	32.8	1.64	39
13	118,328	289,000	200.7	220	3.646	53.4	7.5	yes	0.026	0.034	0.031	6.18	815,819	295,000	204.9	211.0	33.0	33.1	1.64	40
14	118,626	298,000	206.9	215	1.225	53.8	7.5	yes	0.026	0.035	0.034	6.15	816,112	293,000	203.5	211.0	33.2	33.3	1.61	39
15	118,921	295,000	204.9	220	2.920	54.1	7.5	yes	0.026	0.035	0.032	6.45	816,407	295,000	204.9	205.0	33.3	33.4	1.60	46
16	119,220	299,000	207.6	220	2.338	54.7	7.5	yes	0.029	0.036	0.034	6.52	816,714	307,000	213.2	213.0	32.6	32.7	1.42	47
17	119,513	293,000	203.5	220	2.208	53.0	7.5	yes	0.029	0.037	0.033	6.24	817,010	296,000	205.6	213.0	32.8	32.9	1.46	52
18	119,812	299,000	207.6	220	2.154	55.2	7.5	yes	0.030	0.037	0.035	6.17	817,316	306,000	212.5	211.0	33.1	33.2	1.64	53
19	120,110	298,000	206.9	220	2.133	55.9	7.5	yes	0.027	0.033	0.030	6.13	817,619	303,000	210.4	210.0	33.2	33.3	1.64	37
20	120,410	300,000	208.3	220	2.465	53.8	7.5	yes	0.027	0.033	0.031	6.17	817,926	307,000	213.2	215.0	33.6	33.8	1.44	37
21	120,705	295,000	204.9	220	2.088	55.0	7.5	yes	0.027	0.034	0.032	6.21	818,230	304,000	211.1	217.0	33.8	33.9	1.41	58
22	121,002	297,000	206.3	220	1.881	57.2	7.5	yes	0.026	0.033	0.032	6.22	818,532	302,000	209.7	206.0	33.8	33.9	1.42	57
23	121,303	301,000	209.0	220	1.853	59.0	7.5	yes	0.027	0.033	0.033	6.22	818,836	304,000	211.1	212.0	34.1	34.2	1.45	60
24	121,599	296,000	205.6	220	1.894	61.3	7.5	yes	0.029	0.033	0.034	6.18	819,135	299,000	207.6	215.0	34.3	34.5	1.69	39
25	121,897	298,000	206.9	220	2.093	58.6	7.5	yes	0.028	0.034	0.038	6.30	819,441	306,000	212.5	205.0	34.7	34.8	1.54	41
26	122,199	302,000	209.7	200	2.118	58.3	7.5	yes	0.028	0.033	0.034	6.19	819,748	307,000	213.2	211.0	35.1	35.3	2.07	43
27	122,473	274,000	190.3	200	2.360	54.9	7.5	yes	0.028	0.035	0.036	6.27	820,030	282,000	195.8	200.0	35.2	35.4	2.03	38
28	122,755	282,000	195.8	200	2.239	52.9	7.5	yes	0.028	0.034	0.035	6.32	820,317	287,000	199.3	201.0	35.6	35.5	1.95	41
29	123,022	267,000	185.4	200	2.030	53.4	7.5	yes	0.030	0.036	0.037	6.37	820,585	268,000	186.1	193.0	35.4	35.5	2.09	41
30	123,294	272,000	188.9	200	2.397	55.2	7.5	yes	0.027	0.033	0.034	6.36	820,863	278,000	193.1	190.0	35.6	35.7	1.98	49
31																				
TOTALS		8,439,000												8459000						
AVERAGE		281,300.0	195.3	208.2	2.799	51.43			0.029	0.042	0.038	6.22		281,967	195.8	196.9	33.9	33.9	1.54	45
MAXIMUM		302000	210	220	9.455	61.30			0.083	0.149	0.124	8.88		307000	213.2	217.0	35.6	35.7	2.09	60
MINIMUM		251000	174	190	0.978	37.90			0.025	0.033	0.030	5.54		190000	131.9	100.0	32.6	32.7	0.87	37

July 2009

Date	Raw							Press. Relief Open?	Static Mixer Flush	Filters				Filter Effluent						Cl-17	Outside Temperature
	Meter Reading	Raw Flow	Flow	Meter	Turb.	Temp.	DL Pump			#1	#2	Comb.	pH	Meter Reading	Filter Effluen	Flow	Meter	Old Res.	New Res.	(mg/L)	
	123,294	(gal)	(gpm)	(gpm)	(NTU)	(deg. F)				(NTU)	(NTU)	(NTU)		820,863	(gal)	(gpm)	(gpm)	(ft)	(ft)		
1	123,569	275,000	191.0	200	2.418	54.9	7.5	yes	yes	0.026	0.035	0.034	6.24	821,137	274,000	190.3	191.0	35.7	35.8	2.12	54
2	123,843	274,000	190.3	200	2.538	56.3	7.5	yes	yes	0.025	0.033	0.033	6.24	821,415	278,000	193.1	188.0	35.5	35.6	2.00	59
3	124,118	275,000	191.0	200	2.860	60.1	7.5	yes	yes	0.026	0.038	0.036	6.13	821,695	280,000	194.4	194.0	35.5	35.7	1.87	66
4	124,390	272,000	188.9	200	3.896	62.8	7.5	yes	yes	0.026	0.037	0.035	6.15	821,967	272,000	188.9	185.0	35.1	35.3	1.95	48
5	124,663	273,000	189.6	200	3.710	60.1	7.5	yes	yes	0.026	0.035	0.035	6.18	822,233	266,000	184.7	186.0	35.4	35.5	2.05	50
6	124,928	265,000	184.0	200	3.648	60.1	7.5	yes	yes	0.027	0.038	0.038	6.18	822,503	270,000	187.5	186.0	35.0	35.1	2.06	58
7	125,189	261,000	181.3	200	4.034	61.0	7.5	yes	yes	0.027	0.038	0.035	6.19	822,763	260,000	180.6	188.0	34.3	34.5	2.13	60
8	125,452	263,000	182.6	200	4.067	62.1	7.5	yes	yes	0.027	0.038	0.033	6.18	823,022	259,000	179.9	176.0	33.7	33.9	2.16	54
9	125,718	266,000	184.7	200	3.847	61.0	7.5	yes	yes	0.026	0.035	0.033	6.18	823,287	265,000	184.0	189.0	33.3	33.5	1.99	46
10	125,984	266,000	184.7	200	7.803	59.7	7.5	yes	yes	0.027	0.038	0.036	6.16	823,554	267,000	185.4	188.0	33.0	33.2	2.14	48
11	126,253	269,000	186.8				7.5	yes	yes					823,825	271,000	188.2					
12	126,522	269,000	186.8	200	11.36	61.5	7.5	yes	yes	0.030	0.047	0.040	6.14	824,096	271,000	188.2	193.0	32.5	32.8	2.12	60
13	126,792	270,000	187.5	200	8.016	62.8	7.5	yes	yes	0.025	0.033	0.033	6.18	824,360	264,000	183.3	185.0	31.8	32.1	2.13	64
14	127,063	271,000	188.2	210	10.72	66.4	7.5	yes	yes	0.025	0.031	0.033	6.16	824,630	270,000	187.5	186.0	31.3	31.6	2.07	61
15	127,347	284,000	197.2	210	9.373	64.2	7.5	yes	yes	0.025	0.031	0.033	6.27	824,918	288,000	200.0	202.0	31.2	31.6	2.07	56
16	127,636	289,000	200.7	210	9.619	64.2	7.5	yes	yes	0.026	0.032	0.033	6.27	825,210	292,000	202.8	211.0	31.4	31.7	1.85	57
17	127,932	296,000	205.6	210	11.28	64.8	7.5	yes	yes	0.026	0.031	0.033	6.17	825,508	298,000	206.9	210.0	31.6	31.9	2.01	63
18	128,236	304,000	211.1	220	8.660	65.3	7.5	yes	yes	0.027	0.031	0.036	6.27	825,817	309,000	214.6	219.0	31.9	32.2	1.96	63
19	128,539	303,000	210.4	220	7.071	66.6	7.5	yes	yes	0.027	0.032	0.034	6.27	826,123	306,000	212.5	223.0	31.9	32.2	1.99	64
20	128,862	323,000	224.3	230	4.465	66.6	7.5	yes	yes	0.027	0.032	0.034	6.31	826,446	323,000	224.3	221.0	32.1	32.4	1.97	64
21	129,183	321,000	222.9	240	3.309	66.7	7.5	yes	yes	0.027	0.032	0.063	6.29	826,770	324,000	225.0	205.0	32.5	32.8	1.99	61
22	129,508	325,000	225.7	240	2.596	66.6	7.5	yes	yes	0.028	0.032	0.035	6.31	827,104	334,000	231.9	234.0	33.3	33.6	2.04	61
23	129,843	335,000	232.6	240	2.287	65.7	7.5	yes	yes	0.029	0.036	0.035	6.33	827,434	330,000	229.2	232.0	33.9	34.2	1.86	59
24	130,172	329,000	228.5	240	1.995	64.0	7.5	yes	yes	0.031	0.037	0.035	6.33	827,771	337,000	234.0	236.0	34.3	34.6	1.94	56
25	130,506	334,000	231.9	245	1.848	61.7	7.5	yes	yes	0.027	0.032	0.030	6.16	828,111	340,000	236.1	264.0	35.1	35.4	1.82	51
26	130,842	336,000	233.3				7.5	yes	yes					828,443	332,000	230.6					
27	131,178	336,000	233.3	230	1.903	61.5	7.5	yes	yes	0.028	0.033	0.030	6.24	828,774	331,000	229.9	215.0	36.3	36.5	1.74	59
28	131,500	322,000	223.6	230	1.496	60.3	7.5	yes	yes	0.027	0.033	0.031	6.27	829,089	315,000	218.8	224.0	36.5	36.7	1.87	56
29	131,789	289,000	200.7	200	1.602	61.0	7.5	yes	yes	0.027	0.032	0.030	6.27	829,386	297,000	206.3	207.0	36.5	36.7	1.94	56
30	132,062	273,000	189.6	200	1.668	60.3	7.5	yes	yes	0.026	0.031	0.029	6.29	829,661	275,000	191.0	191.0	36.1	36.4	1.85	54
31	132,332	270,000	187.5	200	7.130	58.6	7.5	yes	yes	0.025	0.030	0.027	6.25	829,938	277,000	192.4	163.0	36.1	36.3	1.89	50
TOTALS		9,038,000												25586990	9075000						
AVERAGE		291,548.4	202.5	212.9	5.008	62.31				0.027	0.034	0.035	6.23		292,742	203.3	203.2	33.9	34.1	1.99	57
MAXIMUM		336000	233	245	11.360	66.70				0.031	0.047	0.063	6.33		340000	236.1	264.0	36.5	36.7	2.16	66
MINIMUM		261000	181	200	1.496	56.30				0.025	0.030	0.027	6.13		259000	179.9	163.0	31.2	31.6	1.74	46

August 2009

Date	Raw							Press. Relief Open?	Static Mixer Flush	Filters				Filter Effluent						Cl-17	Temperature
	Meter Reading	Raw Flow	Flow	Meter	Turb.	Temp.	DL Pump			#1	#2	Comb.	pH	Meter Reading	Filter Effluen	Flow	Meter	Old Res.	New Res.	(mg/L)	Outside
	132,332	(gal)	(gpm)	(gpm)	(NTU)	(deg. F)				(NTU)	(NTU)	(NTU)		829,938	(gal)	(gpm)	(gpm)	(ft)	(ft)		
1	132,610	278,000	193.1	200	4.296	55.9	7.5	yes	yes	0.025	0.030	0.026	6.25	830,216	278,000	193.1	200.0	36.2	36.5	1.91	49
2	132,886	276,000	191.7	200	3.098	54.7	7.5	yes	yes	0.024	0.030	0.027	6.20	830,492	276,000	191.7	204.0	36.1	36.3	1.81	50
3	133,164	278,000	193.1	200	2.556	55.2	7.5	yes	yes	0.024	0.031	0.029	6.22	830,772	280,000	194.4	188.0	35.8	36.0	1.89	
4	133,442	278,000	193.1	200	2.336	56.7	7.5	yes	yes	0.025	0.030	0.027	6.28	831,051	279,000	193.8	199.0	35.7	35.9	1.90	58
5	133,717	275,000	191.0	200	2.438	57.9	7.5	yes	yes	0.025	0.032	0.031	6.28	831,331	280,000	194.4	194.0	35.6	35.9	1.85	56
6	133,995	278,000	193.1	200	2.356	58.6	7.5	yes	yes	0.027	0.033	0.036	6.32	831,614	283,000	196.5	201.0	35.6	35.9	1.87	53
7	134,283	288,000	200.0	200	2.402	57.4	7.5	yes	yes	0.027	0.034	0.034	6.32	831,906	292,000	202.8	201.0	35.6	35.8	1.92	49
8	134,554	271,000	188.2	200	2.419	56.5	7.5	yes	yes	0.026	0.033	0.026	6.31	832,176	270,000	187.5	201.0	35.6	35.9	1.83	51
9	134,829	275,000	191.0	200	2.233	55.4	7.5	yes	yes	0.026	0.032	0.029.	6.33	832,458	282,000	195.8	215.0	35.7	35.9	1.92	49
10	135,107	278,000	193.1	200	2.325	54.9	7.5	yes	yes	0.027	0.033	0.031	6.32	832,746	288,000	200.0	212.0	35.6	35.8	1.95	45
11	135,386	279,000	193.8	200	2.355	54.1	7.5	yes	yes	0.027	0.035	0.031	6.32	833,027	281,000	195.1	225.0	35.2	35.4	1.70	47
12	135,661	275,000	191.0	200	2.370	56.1	7.5	yes	yes	0.029	0.036	0.032	6.34	833,306	279,000	193.8	210.0	34.8	35.1	1.89	49
13	135,931	270,000	187.5	200	2.430	57.0	7.5	yes	yes	0.030	0.037	0.031	6.36	833,585	279,000	193.8	201.0	34.5	34.7	1.89	55
14	136,215	284,000	197.2	200	2.527	57.6	7.5	yes	yes	0.030	0.039	0.034	6.35	833,866	281,000	195.1	194.0	34.1	34.4	1.85	54
15	136,488	273,000	189.6	200	2.751	57.6	7.5	yes	yes	0.028	0.036	0.034	6.31	834,140	274,000	190.3	197.0	34.1	34.4	1.90	48
16	136,767	279,000	193.8	200	3.246	55.2	7.5	yes	yes	0.026	0.033	0.030	6.32	834,417	277,000	192.4	200.0	33.2	34.1	1.77	45
17	137,047	280,000	194.4	200	3.505	54.9	7.5	yes	yes	0.026	0.033	0.030	6.26	834,693	276,000	191.7	198.0	33.2	33.4	1.90	47

September 2009

Date	Raw							Press. Relief Open?	Static Mixer Flush	Filters				Filter Effluent						Cl-17	Temperature
	Meter Reading	Raw Flow	Flow	Meter	Turb.	Temp.	DL Pump			#1	#2	Comb.	pH	Meter Reading	Filter Effluen	Flow	Meter	Old Res.	New Res.	(mg/L)	Outside
	141,051	(gal)	(gpm)	(gpm)	(NTU)	(deg. F)				(NTU)	(NTU)	(NTU)		838,712	(gal)	(gpm)	(gpm)	(ft)	(ft)		
1	141,349	298,000	206.9	220	3.661	48.2	7.5	yes	yes	0.027	0.041	0.031	6.12	839,020	308,000	213.9	215.0	33.1	33.7	1.75	47
2	141,645	296,000	205.6	0	2.683	54.0	7.5	yes	yes	0.028	0.041	0.030	6.11	839,325	305,000	211.8	0.0	33.4	33.7	1.58	48
3	141,918	273,000	189.6	220	2.745	48.4	7.5	yes	yes	0.029	0.039	0.030	6.13	839,605	280,000	194.4	231.0	33.4	33.6	1.83	49
4	142,234	316,000	219.4	220	2.464	48.9	7.5	yes	yes	0.030	0.039	0.032	6.13	839,922	317,000	220.1	230.0	34.0	34.2	1.80	46
5	142,526	292,000	202.8	220	2.286	49.6	7.5	yes	yes	0.031	0.041	0.034	6.12	840,219	297,000	206.3	227.0	32.4	32.6	1.80	
6	142,837	311,000	216.0	225	2.125	49.8	7.5	yes	yes	0.031	0.041	0.035	6.12	840,535	316,000	219.4	225.0	31.4	31.6	1.78	
7	143,152	315,000	218.8	220	2.239	47.7	7.5	yes	yes	0.031	0.042	0.040	6.15	840,857	322,000	223.6	228.0	31.6	31.8		
8	143,458	306,000	212.5	220	2.920	46.9	7.5	yes	yes	0.031	0.044	0.037	6.14	841,167	310,000	215.3	230.0	31.8	32.1	1.70	
9	143,767	309,000	214.6	220	2.657	46.9	7.5	yes	yes	0.031	0.044	0.040	6.14	841,484	317,000	220.1	224.0	32.5	32.7	1.66	44
10	144,077	310,000	215.3	220	2.432	47.5	7.5	yes	yes	0.030	0.041	0.038	6.11	841,802	318,000	220.8	228.0	33.1	33.3	1.62	45
11	144,387	310,000	215.3	220	2.283	48.9	7.5	yes	yes	0.029	0.039	0.034	6.12	842,122	320,000	222.2	222.0	33.7	33.9	1.74	45
12	144,695	308,000	213.9	220	2.228	47.8	7.5	yes	yes	0.028	0.039	0.034	6.16	842,437	315,000	218.8	228.0	34.4	34.6	1.72	41
13	145,009	314,000	218.1	220	2.215	47.5	7.5	yes	yes	0.028	0.038	0.034	6.15	842,760	323,000	224.3	229.0	35.1	35.2	1.56	40
14	145,314	305,000	211.8	220	2.168	46.9	7.5	yes	yes	0.028	0.039	0.034	6.15	843,073	313,000	217.4	226.0	35.5	35.6	1.53	36
15	145,602	288,000	200.0	200	2.054	47.7	7.5	yes	yes	0.028	0.040	0.034	6.19	843,366	293,000	203.5	204.0	35.6	35.7	1.72	42
16	145,883	281,000	195.1	200	2.067	47.5	7.5	yes	yes	0.028	0.039	0.033	6.17	843,654	288,000	200.0	203.0	35.6	35.7	1.74	44
17	146,166	283,000	196.5	200	1.973	47.0	7.5	yes	yes	0.028	0.039	0.033	6.22	843,945	291,000	202.1	205.0	35.6	35.8	1.77	47
18	146,448	282,000	195.8	200	1.970	47.7	7.5	yes	yes	0.027	0.038	0.033	6.22	844,234	289,000	200.7	206.0	35.7	35.8	1.78	42
19	146,733	285,000	197.9	200	2.016	46.8	7.5	yes	yes	0.028	0.039	0.032	6.24	844,519	285,000	197.9	206.0	35.9	36.0	1.78	37
20	147,013	280,000	194.4	200	1.985	45.1	7.5	yes	yes	0.028	0.039	0.035	6.24	844,804	285,000	197.9	206.0	36.2	36.3	1.78	34
21	147,293	280,000	194.4	200	1.977	43.5	7.5	yes	yes	0.028	0.041	0.034	6.25	845,097	293,000	203.5	209.0	36.2	36.3	1.59	34
22	147,575	282,000	195.8	200	1.984	41.7	7.5	yes	yes	0.028	0.041	0.033	6.27	845,388	291,000	202.1	205.0	36.2	36.3	1.76	32
23	147,856	281,000	195.1	200	2.461	39.4	7.5	yes	yes	0.027	0.039	0.032	6.27	845,672	284,000	197.2	208.0	36.2	36.3	1.82	29
24	148,130	274,000	190.3	150	2.507	37.9	7.5	yes	yes	0.026	0.035	0.029	6.29	845,963	291,000	202.1	162.0	36.4	36.5	1.69	28
25	148,357	227,000	157.6	175	2.500	37.4	7.5	no	yes	0.031	0.046	0.037	6.41	846,196	233,000	161.8	164.0	35.8	35.9	1.59	25
26	148,592	235,000	163.2	175	2.361	35.4	7.5	no	yes	0.028	0.040	0.033	6.36	846,435	239,000	166.0	166.0	35.5	35.6	1.91	25
27	148,835	243,000	168.8	175	2.292	35.2	7.5	no	yes	0.028	0.041	0.031	6.33	846,682	247,000	171.5	171.0	35.0	35.1	1.88	27
28	149,059	224,000	155.6	200	2.236	35.6	7.5	no	yes	0.029	0.042	0.033	6.33	846,910	228,000	158.3	190.0	34.2	34.2	1.87	25
29	149,319	260,000	180.6	200	2.466	33.8	7.5	no	yes	0.028	0.042	0.032	6.31	847,177	267,000	185.4	199.0	33.9	34.0	1.41	30
30	149,535	216,000	150.0	200	0.424	33.1	7.5	no	yes	0.031	0.056	0.040	6.28	847,396	219,000	152.1	198.0	33.3	33.4	1.85	29
31																					
TOTALS		8,484,000												25301766	8684000						
AVERAGE		282,800.0	196.4	198.0	2.279	44.46				0.029	0.041	0.034	6.21		289,467	201.0	201.5	34.4	34.6	1.72	37
MAXIMUM		316000	219	225	3.661	54.00				0.031	0.056	0.040	6.41		323000	224.3	231.0	36.4	36.5	1.91	49
MINIMUM		216000	150	0	0.424	33.10				0.026	0.035	0.029	6.11		219000	152.1	0.0	31.4	31.6	1.41	25

October 2009

Date	Raw							Press. Relief Open?	Static Mixer Flush	Filters				Filter Effluent						Cl-17	Temperature
	Meter Reading	Raw Flow	Flow	Meter	Turb.	Temp.	DL Pump			#1	#2	Comb.	pH	Meter Reading	Filter Effluen	Flow	Meter	Old Res.	New Res.	(mg/L)	Outside
	149,535	(gal)	(gpm)	(gpm)	(NTU)	(deg. F)				(NTU)	(NTU)	(NTU)		847,396	(gal)	(gpm)	(gpm)	(ft)	(ft)		
1	149,816	281,000	195.1	200	1.464	33.3	7.5	no	yes	0.027	0.043	0.030	6.32	847,676	280,000	194.4	203.0	33.1	33.2	1.98	28
2	150,092	276,000	191.7	200		34.0	7.5	no	yes	0.027	0.043	0.031	6.32	847,965	289,000	200.7	206.0	33.0	33.1	1.61	30
3	150,375	283,000	196.5	200		32.7	7.5	no	yes	0.026	0.041	0.031	6.32	848,248	283,000	196.5	205.0	33.0	33.1	1.73	30
4	150,656	281,000	195.1	205		32.2	7.5	no	yes	0.026	0.042	0.030	6.27	848,535	287,000	199.3	210.0	32.8	32.9	1.71	33
5	150,940	284,000	197.2	150		33.4	7.5	no	yes	0.027	0.042	0.029	6.27	848,823	288,000	200.0	126.0	32.5	32.6	1.76	35
6	151,093	153,000	106.3	150		33.8	7.5	no	yes	0.036		0.037	6.21	848,969	146,000	101.4	124.0	30.8	31.0	1.64	33
7	151,315	222,000	154.2	150		33.3	7.5	no	yes	0.027		0.028	6.27	849,163	194,000	134.7	160.0	29.5	29.6	1.62	35
8	151,523	208,000	144.4	150		33.0	7.5	no	yes	0.026		0.028	6.31	849,374	211,000	146.5	153.0	28.6	28.8	1.62	32
9	151,824	301,000	209.0	250		33.6	7.5	no	yes	0.027	0.039	0.029	6.27	849,668	294,000	204.2	245.0	27.8	28.0	1.77	36
10	152,174	350,000	243.1	250		35.4	7.5	no	yes	0.027	0.038	0.029	6.27	850,034	366,000	254.2	258.0	28.6	28.8	1.63	42
11	152,578	404,000	280.6	250		36.1	7.5	no	yes	0.026	0.036	0.028	6.25	850,394	360,000	250.0	259.0	29.4	29.5	1.46	41
12	152,866	288,000	200.0	250		37.4	7.5	no	yes	0.026	0.035	0.028	6.25	850,738	344,000	238.9	251.0	30.0	30.1	1.45	38
13	153,225	359,000	249.3	250		37.6	7.5	no	yes	0.025	0.035	0.025	6.26	851,105	367,000	254.9	253.0	30.5	30.7	1.49	33
14	153,581	356,000	247.2	250		36.5	7.5	no	yes	0.025	0.035	0.027	6.26	851,465	360,000	250.0	255.0	31.3	31.4	1.51	33
15	153,931	350,000	243.1	225		36.0	7.5	no	yes	0.025	0.035	0.027	6.22	851,827	362,000	251.4	255.0	32.4	32.5	1.50	35
16	154,240	309,000	214.6	225	5.555	34.2	7.5	no	yes	0.026	0.034	0.027	6.29	852,146	319,000	221.5	219.0	32.7	32.7	1.36	27
17	154,541	301,000	209.0	225	6.797	31.8	7.5	no	yes	0.033	0.043	0.033	6.26	852,455	309,000	214.6	218.0	32.9	33.0	1.34	23
18	154,859	318,000	220.8	225	5.826	32.2	7.5	no	yes	0.027	0.036	0.027	6.31	852,783	328,000	227.8	240.0	33.4	33.5	1.34	18
19	155,177	318,000	220.8	225	5.144	32.4	7.5	no	yes	0.025	0.034	0.025	6.32	853,108	325,000	225.7	232.0	33.6	33.7	1.37	20
20	155,476	299,000	207.6	210	4.651	32.5	7.5	no	yes	0.026	0.034	0.025	6.35	853,415	307,000	213.2	214.0	33.8	33.8	1.38	18
21	155,770	294,000	204.2	210	4.305	33.4	7.5	no	yes	0.025	0.034	0.025	6.35	853,716	301,000	209.0	211.0	34.0	34.0	1.30	16
22	156,067	297,000	206.3	220	3.943	33.8	7.5	no	yes	0.025	0.034	0.025	6.35	854,023	307,000	213.2	218.0	34.1	34.0	1.27	11
23	156,358	291,000	202.1	220	3.656	33.8	7.5	no	yes	0.025	0.034	0.025	6.36	854,316	293,000	203.5	208.0	34.3	34.3	0.96	24
24	156,651	293,000	203.5	220	3.294	34.5	7.5	no	yes	0.025	0.034	0.025	6.37	854,622	306,000	212.5	211.0	34.2	34.2	1.47	24
25	156,948	297,000	206.3	220	3.913	34.5	7.5	no	yes	0.029	0.034	0.024	6.33	854,928	306,000	212.5	213.0	34.0	34.0	1.36	28
26	157,225	277,000	192.4	220	4.066	34.5	7.5	no	yes	0.025	0.035	0.024	6.35	855,213	285,000	197.9	207.0	33.8	33.8	1.37	30
27	157,519	294,000	204.2	220	3.436	34.7	7.5	no	yes	0.026	0.035	0.025	6.36	855,515	302,000	209.7	214.0	34.0	34.0	1.34	26
28	157,810	291,000	202.1	220	3.364	33.8	7.5	no	yes	0.025	0.035	0.025	6.38	855,814	299,000	207.6	210.0	34.3	34.3	1.31	20
29	183,890	231,890	161.0	215	1.391		7.5	no	yes	0.026	0.035	0.025	6.35	856,067	253,000	175.7	205.0	33.8	33.8	1.25	15
30	501,440	317,550	220.5	220	2.390	37	7.5	no	yes	0.026	0.035	0.024	6.34	856,377	310,000	215.3	217.0	34.1	34.1	1.12	9
31	823,830	322,390	223.9	220	2.258	37	7.5	no	yes	0.025	0.035	0.025	6.34	856,688	311,000	216.0	225.0	34.5	34.5	1.25	10
TOTALS		9,146,830												26415170	9292000						
AVERAGE		295,059.0	204.9	214.4	3.850	34.28				0.027	0.037	0.027	6.31		299,742	208.2	213.7	32.4	32.5	1.46	27
MAXIMUM		404000	281	250	6.797	37.60				0.036	0.043	0.037	6.38		367000	254.9	259.0	34.5	34.5	1.98	42
MINIMUM		153000	106	150	1.391	31.80				0.025	0.034	0.024	6.21		146000	101.4	124.0	27.8	28.0	0.96	9

November 2009

Date	Raw							Press. Relief Open?	Static Mixer Flush	Filters				Filter Effluent						Cl-17	Outside Temperature
	Meter Reading 823,830	Raw Flow (gal)	Flow (gpm)	Meter (gpm)	Turb. (NTU)	Temp. (deg. F)	DL Pump			#1 (NTU)	#2 (NTU)	Comb. (NTU)	pH	Meter Reading 856,688	Filter Effluen (gal)	Flow (gpm)	Meter (gpm)	Old Res. (ft)	New Res. (ft)	(mg/L)	
1	######	332,560	230.9	220	2.121	37	7.5	no	yes	0.026	0.035	0.025	6.36	857,016	328,000	227.8	227.0	34.9	34.9	1.37	6
2	######	323,240	224.5	220	2.057	37	7.5	no	yes	0.026	0.035	0.025	6.33	857,332	316,000	219.4	223.0	35.1	35.1	1.44	5
3	######	316,510	219.8	220	1.947	37	7.5	no	yes	0.026	0.035	0.024	6.35	857,640	308,000	213.9	217.0	35.4	35.4	1.41	3
4	######	303,427	210.7	210	1.872	37	7.5	no	yes	0.026	0.035	0.024	6.36	857,944	304,000	211.1	212.0	35.8	35.7	1.44	12
5	######	287,384	199.6	200	1.813	36	7.5	no	yes	0.027	0.035	0.025	6.40	858,229	285,000	197.9	194.0	35.8	35.7	1.44	11
6	######	288,732	200.5	200	1.747	36	7.5	no	yes	0.026	0.036	0.025	6.37	858,513	284,000	197.2	198.0	35.8	35.8	1.41	4
7	######	300,884	208.9	200	1.714	36	7.5	no	yes	0.027	0.037	0.024	6.40	858,800	287,000	199.3	200.0	35.8	35.8	1.36	-1
8	######	261,900	181.9	200	1.701	37	7.5	no	yes	0.027	0.037	0.025	6.40	859,069	269,000	186.8	201.0	35.5	35.5	1.38	2
9	######	290,636	201.8	200	1.665	37	7.5	no	yes	0.027	0.037	0.026	6.41	859,352	283,000	196.5	202.0	35.0	35.0	1.45	2
10	######	283,560	196.9	200	1.622	37	7.5	no	yes	0.036	0.043	0.036	6.38	859,631	279,000	193.8	202.0	35.0	35.0	1.37	1
11	######	291,367	202.3	200	1.626	37	7.5	no	yes	0.027	0.037	0.026	6.40	859,910	279,000	193.8	198.0	34.8	34.8	1.55	11
12	######	284,802	197.8	200	1.587	36	7.5	no	yes	0.027	0.036	0.025	6.37	860,195	285,000	197.9	200.0	34.7	34.7	1.53	12
13	######	288,041	200.0	200	1.562	37	7.5	no	yes	0.027	0.036	0.024	6.36	860,479	284,000	197.2	201.0	34.7	34.7	1.58	7
14	######	267,377	185.7	200	1.493	38	7.5	no	yes	0.027	0.036	0.026	6.36	860,769	290,000	201.4	201.0	34.9	34.9	1.42	-4
15	######	288,807	200.6	200	1.469	35.0	7.5	no	yes	0.027	0.036	0.025	6.36	861,052	283,000	196.5	202.0	35.0	35.0	1.54	2
16	######	287,434	199.6	200	1.449	34.9	7.5	no	yes	0.028	0.037	0.027	6.38	861,335	283,000	196.5	198.0	34.7	34.7	1.54	-9
17	######	291,355	202.3	200	1.419	34.9	7.5	no	yes	0.028	0.038	0.028	6.38	861,622	287,000	199.3	203.0	34.5	34.5	1.52	-19
18	######	286,194	198.7	200	1.407	34.8	7.5	no	yes	0.026	0.036	0.026	6.34	861,902	280,000	194.4	195.0	34.3	34.4	1.53	-5
19	######	288,373	200.3	200	1.381	34.1	7.5	no	yes	0.027	0.036	0.024	6.36	862,189	287,000	199.3	198.0	34.1	34.1	1.54	-19
20	######	280,610	194.9	200	1.366	34.1	7.5	no	yes	0.027	0.036	0.026	6.37	862,468	279,000	193.8	200.0	34.1	34.1	1.54	-21
21	######	289,423	201.0	200	1.318	34.6	7.5	no	yes	0.028	0.036	0.026	6.39	862,752	284,000	197.2	205.0	34.2	34.2	1.52	-24
22	######	297,102	206.3	200	1.290	34.9	7.5	no	yes	0.027	0.037	0.026	6.38	863,049	297,000	206.3	200.0	34.1	34.1	1.54	-16
23	######	282,184	196.0	200	1.264	35.0	7.5	no	yes	0.027	0.037	0.027	6.38	863,320	271,000	188.2	200.0	33.6	33.7	1.56	-2
24	######	284,204	197.4	200	1.251	35.0	7.5	no	yes	0.027	0.037	0.027	6.39	863,598	278,000	193.1	197.0	33.4	33.4	1.50	5
25	######	320,871	222.8	220	1.273	35.2	7.5	no	yes	0.028	0.037	0.027	6.36	863,909	311,000	216.0	216.0	33.2	33.3	1.47	13
26	######	329,704	229.0	230	1.386	35.5	7.5	no	yes	0.027	0.038	0.028	6.30	864,222	313,000	217.4	225.0	33.6	33.6	1.15	3
27	######	330,425	229.5	230	1.321	35.4	7.5	no	yes	0.027	0.038	0.027	6.29	864,545	323,000	224.3	227.0	34.0	34.0	1.48	5
28	######	332,924	231.2	230	1.307	35.3	7.5	no	yes	0.026	0.037	0.027	6.31	864,864	319,000	221.5	227.0	34.4	34.4	1.36	-1
29	######	327,470	227.4	230	1.305	35.2	7.5	no	yes	0.026	0.037	0.027	6.34	865,180	316,000	219.4	230.0	34.6	34.7	1.57	-7
30	######	332,492	230.9	230	1.272	35.2	7.5	no	yes	0.027	0.038	0.028	6.32	865,498	318,000	220.8	229.0	34.5	34.5	1.48	3
31																					
TOTALS		8,969,992												25836384	8810000						
AVERAGE		298,999.7	207.6	208.0	1.534	35.80				0.027	0.037	0.026	6.36		293,667	203.9	207.6	34.7	34.7	1.47	-1
MAXIMUM		332924	231	230	2.121	38.00				0.036	0.043	0.036	6.41		328000	227.8	230.0	35.8	35.8	1.58	13
MINIMUM		261900	182	200	1.251	34.10				0.026	0.035	0.024	6.29		269000	186.8	194.0	33.2	33.3	1.15	-24

December 2009

Date	Raw							Press. Relief Open?	Static Mixer Flush	Filters				Filter Effluent						Cl-17	Outside Temperature
	Meter Reading	Raw Flow	Flow	Meter	Turb.	Temp.	DL Pump			#1	#2	Comb.	pH	Meter Reading	Filter Effluen	Flow	Meter	Old Res.	New Res.	(mg/L)	
	######	(gal)	(gpm)	(gpm)	(NTU)	(deg. F)				(NTU)	(NTU)	(NTU)		865,498	(gal)	(gpm)	(gpm)	(ft)	(ft)		
1	######	333,950	231.9	230	1.240	35.2	7.5	no	yes	0.027	0.038	0.028	6.35	865,825	327,000	227.1	227.0	35.0	35.0	1.54	17
2	######	332,141	230.7	230	1.287	35.2	7.5	no	yes	0.027	0.039	0.029	6.33	866,144	319,000	221.5	229.0	35.3	35.2	1.45	19
3	######	321,040	222.9	210	1.207	35.3	7.5	no	yes	0.028	0.034	0.025	6.32	866,455	311,000	216.0	216.0	35.5	35.5	1.64	14
4	######	302,033	209.7	210	1.166	35.7	7.5	no	yes	0.028	0.035	0.026	6.34	866,749	294,000	204.2	209.0	35.6	35.5	1.65	0
5	######	306,577	211.0	210	1.161	35.2	7.5	no	yes	0.028	0.035	0.026	6.35	867,055	306,000	212.5	211.0	36.1	36.1	1.84	19
6	######	301,420	209.3	210	1.160	35.2	7.5	no	yes	0.029	0.036	0.027	6.35	867,347	292,000	202.8	208.0	36.3	36.3	1.84	23
7	######	305,658	212.3	210	1.131	35.2	7.5	no	yes	0.029	0.036	0.028	6.34	867,648	301,000	209.0	213.0	36.4	36.4	1.97	26
8	######	286,740	199.1	191	1.111	35.1	7.5	no	yes	0.029	0.046	0.031	6.40	867,926	278,000	193.1	192.0	36.0	35.9	2.17	21
9	######	275,576	191.4	192	1.080	35.0	7.5	no	yes	0.030	0.038	0.027	6.37	868,194	268,000	186.1	212.0	35.9	35.9	1.69	12
10	######	277,694	192.8	191	1.068	35.0	7.5	no	yes	0.030	0.038	0.028	6.37	868,461	267,000	185.4	187.0	35.7	35.7	1.96	12
11	######	270,896	188.1	191	1.223	35.3	7.5	no	yes	0.034	0.043	0.032	6.39	868,729	268,000	186.1	187.0	35.6	35.6	1.52	14
12	######	281,610	195.6	190	1.215	35.3	7.5	no	yes	0.035	0.043	0.032	6.40	869,001	272,000	188.9	198.0	35.7	35.7	1.76	14
13	######	275,372	191.2	190	1.226	35.3	7.5	no	yes	0.033	0.040	0.031	6.34	869,270	269,000	186.8	190.0	35.5	35.5	1.68	12
14	######	274,628	190.7	190	1.202	35.1	7.5	no	yes	0.031	0.040	0.029	6.36	869,538	268,000	186.1	191.0	35.2	35.2	1.98	2
15	######	274,612	190.7	195	1.209	35.2	7.5	no	yes	0.031	0.040	0.030	6.34	869,809	271,000	188.2	198.0	35.1	35.1	1.93	-4
16	######	282,258	196.0	195	1.123	34.9	7.5	no	yes	0.031	0.040	0.028	6.33	870,084	275,000	191.0	188.0	34.9	34.9	1.87	-13
17	######	285,770	198.5	200	1.097	34.8	7.5	no	yes	0.030	0.037	0.029	6.34	870,368	284,000	197.2	201.0	34.8	34.8	2.09	-23
18	######	289,299	200.9	200	1.094	34.1	7.5	no	yes	0.031	0.039	0.031	6.32	870,652	284,000	197.2	194.0	34.7	34.7	2.15	-10
19	######	291,400	202.4	200	1.034	34.8	7.5	no	yes	0.030	0.039	0.031	6.34	870,938	286,000	198.6	205.0	34.8	34.8	2.24	-17
20	######	287,160	199.4	200	1.024	34.1	7.5	no	yes	0.031	0.040	0.028	6.35	871,216	278,000	193.1	200.0	34.4	34.4	2.19	12
21	######	289,838	201.3	200	1.000	34.7	7.5	no	yes	0.032	0.040	0.032	6.34	871,493	277,000	192.4	190.0	34.2	34.2	1.55	22
22	######	286,836	199.2	200	1.005	34.7	7.5	no	yes	0.030	0.039	0.028	6.33	871,781	288,000	200.0	203.0	34.3	34.4	2.20	25
23	######	287,781	199.8	199	1.041	34.8	7.5	no	yes	0.031	0.040	0.030	6.33	872,065	284,000	197.2	200.0	34.3	34.4	1.93	17
24	######	289,231	200.9	200	1.055	34.8	7.5	no	yes	0.031	0.039	0.031	6.33	872,346	281,000	195.1	280.0	34.4	34.4	2.06	15
25	######	288,969	200.7	200	1.062	34.7	7.5	no	yes	0.031	0.040	0.031	6.34	872,627	281,000	195.1	204.0	34.4	34.5	2.11	10
26	######	289,105	200.8	200	1.061	34.8	7.5	no	yes	0.032	0.041	0.032	6.34	872,911	284,000	197.2	199.0	34.6	34.6	2.14	11
27	######	290,043	201.4	200	1.048	34.7	7.5	no	yes	0.033	0.042	0.034	6.33	873,194	283,000	196.5	203.0	34.6	34.6	2.12	14
28	######	289,617	201.1	200	1.086	34.7	7.5	no	yes	0.031	0.040	0.032	6.34	873,476	282,000	195.8	231.0	34.4	34.4	2.37	15
29	######	290,608	201.8	200	1.162	34.7	7.5	no	yes	0.031	0.039	0.031	6.32	873,758	282,000	195.8	205.0	34.4	34.4	1.97	14
30	######	285,953	198.6	200	1.121	34.6	7.5	no	yes	0.032	0.041	0.032	6.34	874,044	286,000	198.6	207.0	34.6	34.5	2.06	5
31	######	292,392	203.1	200	1.161	34.5	7.5	no	yes	0.033	0.042	0.032	6.35	874,332	288,000	200.0	201.0	34.6	34.6	1.95	-2
TOTALS		9,036,207												26973436	8834000						
AVERAGE		291,490.5	202.4	201.1	1.125	34.93				0.031	0.039	0.030	6.35		284,968	197.9	205.8	35.1	35.1	1.92	10
MAXIMUM		333950	232	230	1.287	35.70				0.035	0.046	0.034	6.40		327000	227.1	280.0	36.4	36.4	2.37	26
MINIMUM		270896	188	190	1.000	34.10				0.027	0.034	0.025	6.32		267000	185.4	187.0	34.2	34.2	1.45	-23

WATER PRODUCTION

January 2010

Date	Raw							Press. Relief Open?	Static Mixer Flush	Filters				Filter Effluent						Cl-17	Temperature
	Meter Reading	Raw Flow	Flow	Meter	Turb.	Temp.	DL Pump			#1	#2	Comb.	pH	Meter Reading	Filter Effluent	Flow	Meter	Old Res.	New Res.	(mg/L)	Outside
	18,830,029	(gal)	(gpm)	(gpm)	(NTU)	(deg. F)				(NTU)	(NTU)	(NTU)		874,332	(gal)	(gpm)	(gpm)	(ft)	(ft)		
1	19,118,064	288,035	200.0	201	1.224	34.4	7.5	no	yes	0.035	0.045	0.034	6.37	874,615	283,000	196.5	202.0	34.6	34.5	2.09	-5
2	19,408,083	290,019	201.4	200	1.208	34.3	7.5	no	yes	0.041	0.052	0.037	6.36	874,900	285,000	197.9	206.0	34.6	34.6	2.08	-7
3	19,699,049	290,966	202.1	200	1.216	34.3	7.5	no	yes	0.041	0.049	0.038	6.38	875,184	284,000	197.2	205.0	34.5	34.5	2.02	-2
4	19,990,126	291,077	202.1	200	1.212	34.1	7.5	no	yes	0.036	0.047	0.042	6.39	875,474	290,000	201.4	202.0	34.3	34.3	2.05	-12
5	20,276,868	286,742	199.1	200	1.212	34.4	7.5	no	yes	0.038	0.050	0.040	6.40	875,753	279,000	193.8	198.0	34.2	34.2	1.86	0
6	20,568,034	291,166	202.2	201	1.209	34.5	7.5	no	yes	0.033	0.041	0.033	6.34	876,043	290,000	201.4	203.0	34.2	34.2	2.15	1
7	20,855,066	287,032	199.3	200	1.179	34.4	7.5	no	yes	0.030	0.037	0.030	6.28	876,327	284,000	197.2	200.0	34.2	34.2	1.97	-10
8	21,143,089	288,023	200.0	200	1.170	34.4	7.5	no	yes	0.030	0.037	0.026	6.28	876,610	283,000	196.5	201.0	34.1	34.0	2.13	-10
9	21,433,993	290,904	202.0	200	1.178	34.3	7.5	no	yes	0.031	0.039	0.030	6.27	876,890	280,000	194.4	198.0	34.1	34.1	1.99	-14
10	21,720,824	286,831	199.2	200	1.167	34.3	7.5	no	yes	0.032	0.040	0.032	6.27	877,170	280,000	194.4	201.0	34.1	34.1	2.25	-11
11	22,013,044	292,220	202.9	200	1.154	34.3	7.5	no	yes	0.029	0.036	0.029	6.27	877,457	287,000	199.3	185.0	33.7	33.7	2.30	-16
12	22,301,691	288,647	200.4	200	1.751	35.2	7.5	no	yes	0.033	0.042	0.041	6.28	877,738	281,000	195.1	197.0	33.8	33.8	1.66	-18
13	22,589,376	287,685	199.8	200	1.521	35.0	7.5	no	yes	0.032	0.039	0.040	6.28	878,019	281,000	195.1	197.0	33.7	33.7	1.93	-20
14	22,876,908	287,532	199.7	200	1.413	34.1	7.5	no	yes	0.032	0.040	0.039	6.27	878,304	285,000	197.9	200.0	33.8	33.7	1.94	-22
15	23,165,811	288,903	200.6	200	1.658	35.1	7.5	no	yes	0.032	0.041	0.049	6.29	878,583	279,000	193.8	197.0	33.3	33.3	1.86	-25
16	23,452,842	287,031	199.3	200	1.468	34.9	7.5	no	yes	0.032	0.040	0.050	6.29	878,868	285,000	197.9	201.0	33.3	33.3	2.09	-27
17	23,742,643	289,801	201.3	199	1.357	34.6	7.5	no	yes	0.032	0.040	0.051	6.29	879,155	287,000	199.3	200.0	33.2	33.2	2.19	-29
18	24,030,502	287,859	199.9	200	1.278	34.5	7.5	no	yes	0.033	0.041	0.052	6.30	879,437	282,000	195.8	202.0	32.8	32.9	2.30	-23
19	24,316,381	285,879	198.5	200	1.231	34.3	7.5	no	yes	0.033	0.040	0.052	6.28	879,721	284,000	197.2	198.0	32.6	32.6	2.34	-34
20	24,608,319	291,938	202.7	199	1.207	34.3	7.5	no	yes	0.034	0.043	0.055	6.28	880,003	282,000	195.8	199.0	32.5	32.5	2.38	-16
21	24,894,256	285,937	198.6	201	1.175	34.0	7.5	no	yes	0.033	0.041	0.052	6.25	880,291	288,000	200.0	207.0	32.3	32.3	2.37	-15
22	25,184,744	290,488	201.7	201	1.207	34.0	7.5	no	yes	0.032	0.037	0.050	6.27	880,578	287,000	199.3	201.0	32.0	32.0	2.37	-19
23	25,475,418	290,674	201.9	201	1.179	33.1	7.5	no	yes	0.034	0.041	0.053	6.29	880,868	290,000	201.4	205.0	31.9	31.9	2.37	1
24	25,767,118	291,700	202.6	202	1.191	33.1	7.5	no	yes	0.035	0.044	0.057	6.29	881,159	291,000	202.1	205.0	31.6	31.6	2.36	12
25	26,055,867	288,749	200.5	200	1.166	33.7	7.5	no	yes	0.036	0.044	0.059	6.28	881,442	283,000	196.5	199.0	31.1	31.2	2.15	-5
26	26,347,460	291,593	202.5	210	1.511	35.2	7.5	no	yes	0.031	0.040	0.051	6.29	881,731	289,000	200.7	206.0	30.9	31.0	2.11	4
27	26,649,393	301,933	209.7	220	1.630	35.1	7.5	no	yes	0.033	0.043	0.054	6.27	882,030	299,000	207.6	214.0	30.5	30.6	1.67	-8
28	26,970,261	320,868	222.8	220	1.546	34.9	7.5	no	yes	0.033	0.041	0.053	6.27	882,338	308,000	213.9	220.0	30.5	30.6	1.76	-2
29	27,287,868	317,607	220.6	220	1.445	34.8	7.5	no	yes	0.035	0.042	0.056	6.26	882,650	312,000	216.7	222.0	30.6	30.7	1.93	7
30	27,604,506	316,638	219.9	220	1.334	34.5	7.5	no	yes	0.034	0.044	0.039	6.26	882,960	310,000	215.3	222.0	31.0	31.1	2.14	16
31	27,923,979	319,473	221.9	220	2.19	34.8	7.5	no	yes	0.034	0.044	0.035	6.28	883,276	316,000	219.4	221.0	31.1	31.2	2.19	9
TOTALS		######												27245574	8944000						
AVERAGE		293,353.2	203.7	203.7	1.342	34.42				0.034	0.042	0.044	6.30		288,516	200.4	203.7	32.9	32.9	2.10	-10
MAXIMUM		320868	223	220	2.190	35.20				0.041	0.052	0.059	6.40		316000	219.4	222.0	34.6	34.6	2.38	16
MINIMUM		285879	199	199	1.154	33.10				0.029	0.036	0.026	6.25		279000	193.8	185.0	30.5	30.6	1.66	-34

WATER PRODUCTION

February 2010

Date	Raw							Press. Relief Open?	Static Mixer Flush	Filters				Filter Effluent						Cl-17	Temperature
	Meter Reading	Raw Flow	Flow	Meter	Turb.	Temp.	DL Pump			#1	#2	Comb.	pH	Meter Reading	Filter Effluent	Flow	Meter	Old Res.	New Res.	(mg/L)	Outside
	27,923,979	(gal)	(gpm)	(gpm)	(NTU)	(deg. F)				(NTU)	(NTU)	(NTU)		883,276	(gal)	(gpm)	(gpm)	(ft)	(ft)		
1	28,244,333	320,354	222.5	220	1.178	34.5	7.5	no	yes	0.034	0.042	0.039	6.28	883,590	314,000	218.1	219.0	30.1	31.0	2.46	-7
2	28,560,736	316,403	219.7	220	1.157	34.4	7.5	no	yes	0.035	0.045	0.045	6.28	883,901	311,000	216.0	218.0	31.0	31.1	2.35	-10
3	28,874,984	314,248	218.2	220	1.232	34.2	7.5	no	yes	0.046	0.058	0.054	6.31	884,209	308,000	213.9	221.0	31.2	31.2	2.27	-3
4	29,194,186	319,202	221.7	221	1.157	34.2	7.5	no	yes	0.036	0.045	0.041	6.29	884,523	314,000	218.1	222.0	31.6	31.6	2.30	-9
5	29,514,706	320,520	222.6	220	1.127	33.9	7.5	no	yes	0.032	0.041	0.038	6.27	884,838	315,000	218.8	222.0	32.0	32.1	2.30	-12
6	29,829,940	315,234	218.9	220	1.441	35.7	7.5	no	yes	0.029	0.035	0.033	6.21	885,141	303,000	210.4	222.0	32.6	32.7	2.10	-16
7	30,147,155	317,215	220.3	220	1.360	35.0	7.5	no	yes	0.029	0.037	0.035	6.20	885,448	307,000	213.2	221.0	33.0	33.0	2.05	-8
8	30,465,996	318,841	221.4	220	1.255	34.7	7.5	no	yes	0.028	0.036	0.034	6.21	885,756	308,000	213.9	219.0	33.1	33.1	2.28	-25
9	30,785,300	319,304	221.7	219	1.163	34.4	7.5	no	yes	0.029	0.037	0.036	6.20	886,067	311,000	216.0	220.0	33.4	33.4	2.36	-21
10	31,103,481	318,181	221.0	220	1.102	34.4	7.5	no	yes	0.029	0.037	0.035	6.21	886,376	309,000	214.6	220.0	33.7	33.7	2.43	16
11	31,409,850	306,369	212.8	210	1.103	34.5	7.5	no	yes	0.030	0.037	0.036	6.22	886,679	303,000	210.4	212.0	33.8	33.7	2.51	22
12	31,713,210	303,360	210.7	212	1.332	35.2	7.5	no	yes	0.030	0.038	0.036	6.23	886,974	295,000	204.9	212.0	33.7	33.7	2.34	10
13	32,019,116	305,906	212.4	210	1.367	35.2	7.5	no	yes	0.031	0.039	0.037	6.20	887,277	303,000	210.4	212.0	34.1	34.1	2.31	15
14	32,320,618	301,502	209.4	210	1.438	35.1	7.5	no	yes	0.034	0.038	0.036	6.23	887,572	295,000	204.9	211.0	34.2	34.1	2.26	4
15	32,627,408	306,790	213.0	210	1.470	35.0	7.5	no	yes	0.031	0.039	0.036	6.23	887,869	297,000	206.3	211.0	34.2	34.1	1.97	3
16	32,935,506	308,098	214.0	210	1.469	34.9	7.5	no	yes	0.031	0.039	0.036	6.22	888,171	302,000	209.7	209.0	34.1	34.1	2.65	3
17	33,230,896	295,390	205.1	210	1.390	34.8	7.5	no	yes	0.034	0.043	0.041	6.33	888,464	293,000	203.5	212.0	33.9	33.8	2.62	0
18	33,536,458	305,562	212.2	210	1.325	34.8	7.5	no	yes	0.030	0.037	0.034	6.30	888,761	297,000	206.3	213.0	33.9	33.8	2.52	14
19	33,839,645	303,187	210.5	210	1.400	35.0	7.5	no	yes	0.029	0.037	0.033	6.30	889,053	292,000	202.8	211.0	33.8	33.8	2.48	31
20	34,147,992	308,347	214.1	210	1.561	35.2	7.5	no	yes	0.029	0.037	0.034	6.32	889,352	299,000	207.6	213.0	33.9	33.9	2.32	29
21	34,449,720	301,728	209.5	211	1.496	35.1	7.5	no	yes	0.030	0.039	0.035	6.32	889,646	294,000	204.2	214.0	33.9	33.9	2.19	30
22	34,753,496	303,776	211.0	210	1.533	35.0	7.5	no	yes	0.030	0.038	0.034	6.32	889,942	296,000	205.6	212.0	33.9	33.9	2.39	19
23	35,058,946	305,450	212.1	210	1.536	35.0	7.5	no	yes	0.030	0.038	0.035	6.34	890,238	296,000	205.6	211.0	34.0	33.9	2.59	2
24	35,358,091	299,145	207.7	210	1.537	34.8	7.5	no	yes	0.029	0.037	0.032	6.30	890,532	294,000	204.2	209.0	33.9	33.9	2.67	-2
25	35,662,460	304,369	211.4	210	1.570	34.1	7.5	no	yes	0.029	0.038	0.032	6.32	890,832	300,000	208.3	214.0	34.1	34.1	2.52	-16
26	35,968,281	305,821	212.4	210	1.330	34.2	7.5	no	yes	0.030	0.039	0.032	6.31	891,132	300,000	208.3	210.0	34.3	34.3	2.57	-28
27	36,254,842	286,561	199.0	200	1.156	33.9	7.5	no	yes	0.029	0.038	0.025	6.33	891,415	283,000	196.5	200.0	34.6	34.5	2.90	-31
28	36,543,971	289,129	200.8	199	1.133	33.6	7.5	no	yes	0.029	0.037	0.037	6.33	891,703	288,000	200.0	201.0	34.7	34.7	2.86	-35
29																					
30																					
31																					
TOTALS		######												24855461	8427000						
AVERAGE		307,856.9	213.8	212.9	1.333	34.67				0.031	0.039	0.036	6.27		300,964	209.0	214.0	33.4	33.4	2.41	-1
MAXIMUM		320520	223	221	1.570	35.70				0.046	0.058	0.054	6.34		315000	218.8	222.0	34.7	34.7	2.90	31
MINIMUM		286561	199	199	1.102	33.60				0.028	0.035	0.025	6.20		283000	196.5	200.0	31.0	31.1	1.97	-35

WATER PRODUCTION

March 2010

Date	Raw							Press. Relief Open?	Static Mixer Flush	Filters				Filter Effluent						Cl-17	Temperature
	Meter Reading	Raw Flow	Flow	Meter	Turb.	Temp.	DL Pump			#1	#2	Comb.	pH	Meter Reading	Filter Effluent	Flow	Meter	Old Res.	New Res.	(mg/L)	Outside
	36,543,971	(gal)	(gpm)	(gpm)	(NTU)	(deg. F)				(NTU)	(NTU)	(NTU)		891,703	(gal)	(gpm)	(gpm)	(ft)	(ft)		
1	36,832,684	288,713	200.5	200	1.373	33.4	7.5	no	yes	0.030	0.039	0.040	6.34	891,990	287,000	199.3	197.0	34.6	34.5	2.87	-30
2	37,118,533	285,849	198.5	198	1.118	33.2	7.5	no	yes	0.030	0.040	0.038	6.34	892,271	281,000	195.1	194.0	34.6	34.6	2.88	-29
3	37,406,458	287,925	199.9	198	1.221	33.3	7.5	no	yes	0.030	0.040	0.029	6.32	892,548	277,000	192.4	195.0	34.3	34.3	2.79	-2
4	37,693,655	287,197	199.4	200	2.735	33.4	7.5	no	yes	0.032	0.041	0.029	6.32	892,832	284,000	197.2	201.0	34.2	34.1	2.81	-3
5	37,980,117	286,462	198.9	200	3.254	33.3	7.5	no	yes	0.031	0.040	0.039	6.32	893,116	284,000	197.2	201.0	33.9	33.8	2.94	4
6	38,286,146	306,029	212.5	209	3.183	33.4	7.5	no	yes	0.032	0.042	0.042	6.30	893,415	299,000	207.6	209.0	33.9	33.9	2.88	1
7	38,584,547	298,401	207.2	210	2.939	33.2	7.5	no	yes	0.034	0.044	0.046	6.31	893,710	295,000	204.9	212.0	33.7	33.7	2.82	-3
8	38,889,673	305,126	211.9	210	3.726	33.3	7.5	no	yes	0.033	0.043	0.044	6.31	894,006	296,000	205.6	205.0	33.7	33.5	2.78	-20
9	39,193,482	303,809	211.0	210	5.740	33.2	7.5	no	yes	0.032	0.042	0.041	6.31	894,307	301,000	209.0	210.0	33.6	33.6	2.74	-12
10	39,495,072	301,590	209.4	210	4.478	33.0	7.5	no	yes	0.048	0.044	0.036	6.32	894,603	296,000	205.6	215.0	33.7	33.7	2.67	-10
11	39,801,710	306,638	212.9	211	2.671	33.0	7.5	no	yes	0.034	0.045	0.030	6.32	894,901	298,000	206.9	210.0	33.7	33.7	2.74	-20
12	40,102,533	300,823	208.9	210	1.027	33.0	7.5	no	yes	0.034	0.045	0.028	6.32	895,194	293,000	203.5	206.0	33.6	33.6	2.68	-18
13	40,415,073	312,540	217.0	211	1.015	32.9	7.5	no	yes	0.036	0.046	0.029	6.33	895,501	307,000	213.2	214.0	34.0	34.0	2.71	-30
14	40,713,216	298,143	207.0	209	1.026	32.9	7.5	no	yes	0.036	0.046	0.029	6.34	895,793	292,000	202.8	207.0	34.0	34.0	2.59	-28
15	41,002,505	289,289	200.9	210	1.016	32.9	7.5	no	yes	0.036	0.049	0.030	6.34	896,078	285,000	197.9	217.0	34.2	34.1	2.63	-25
16	41,307,976	305,471	212.1	210	1.269	34.5	7.5	no	yes	0.031	0.041	0.026	6.35	896,374	296,000	205.6	209.0	34.3	34.3	2.43	-16
17	41,613,960	305,984	212.5	210	1.449	34.6	7.5	no	yes	0.032	0.041	0.027	6.39	896,671	297,000	206.3	209.0	34.3	34.3	2.38	4
18	41,916,329	302,369	210.0	210	2.009	34.9	7.5	no	yes	0.030	0.038	0.024	6.36	896,972	301,000	209.0	210.0	34.8	34.7	2.13	9
19	42,219,578	303,249	210.6	201	2.290	35.0	7.5	no	yes	0.031	0.040	0.025	6.38	897,265	293,000	203.5	208.0	35.2	35.1	2.06	16
20	42,509,503	289,925	201.3	202	2.069	34.8	7.5	no	yes	0.032	0.041	0.025	6.40	897,551	286,000	198.6	201.0	35.4	35.4	2.20	12
21	42,800,813	291,310	202.3	201	1.951	34.8	7.5	no	yes	0.030	0.038	0.024	6.25	897,836	285,000	197.9	205.0	35.6	35.5	2.81	2
22	43,091,125	290,312	201.6	202	2.000	34.0	7.5	no	yes	0.031	0.040	0.030	6.24	898,119	283,000	196.5	202.0	35.6	35.5	2.67	-1
23	43,383,511	292,386	203.0	201	1.999	34.7	7.5	no	yes	0.028	0.036	0.026	6.23	898,404	285,000	197.9	202.0	35.6	35.5	2.81	4
24	43,672,794	289,283	200.9	201	2.063	34.1	7.5	no	yes	0.031	0.040	0.029	6.23	898,687	283,000	196.5	200.0	35.6	35.5	2.79	4
25	43,965,622	292,828	203.4	200	1.969	34.6	7.5	no	yes	0.031	0.040	0.028	6.24	898,967	280,000	194.4	200.0	35.5	35.4	2.74	8
26	44,252,023	286,401	198.9	200	2.089	34.6	7.5	no	yes	0.029	0.037	0.027	6.23	899,253	286,000	198.6	201.0	35.5	35.4	2.80	7
27	44,541,893	289,870	201.3	201	2.109	34.5	7.5	no	yes	0.031	0.039	0.030	6.24	899,539	286,000	198.6	500.0	35.7	35.6	2.69	-10
28	44,837,698	295,805	205.4	200	2.233	34.4	7.5	no	yes	0.031	0.041	0.029	6.24	899,829	290,000	201.4	199.0	35.8	35.7	2.81	-13
29	45,123,803	286,105	198.7	200	2.258	34.4	7.5	no	yes	0.032	0.042	0.030	6.25	900,108	279,000	193.8	200.0	35.6	35.9	2.75	-10
30	45,409,750	285,947	198.6	200	2.283	34.3	7.5	no	yes	0.033	0.044	0.031	6.28	900,383	275,000	191.0	200.0	35.4	35.3	1.90	-9
31	45,702,570	292,820	203.3	200	2.197	34.2	7.5	no	yes	0.030	0.038	0.028	6.25	900,664	281,000	195.1	194.0	35.2	35.2	2.78	-18
TOTALS		######												27786887	8961000						
AVERAGE		295,438.7	205.2	204.4	2.218	33.86				0.032	0.041	0.031	6.30		289,065	200.7	214.0	34.7	34.6	2.65	-8
MAXIMUM		312540	217	211	5.740	35.00				0.048	0.049	0.046	6.40		307000	213.2	500.0	35.8	35.9	2.94	16
MINIMUM		285849	199	198	1.015	32.90				0.028	0.036	0.024	6.23		275000	191.0	194.0	33.6	33.5	1.90	-30

WATER PRODUCTION

April 2010

Date	Raw							Press. Relief Open?	Static Mixer Flush	Filters				Filter Effluent						Cl-17	Temperature
	Meter Reading	Raw Flow	Flow	Meter	Turb.	Temp.	DL Pump			#1	#2	Comb.	pH	Meter Reading	Filter Effluent	Flow	Meter	Old Res.	New Res.	(mg/L)	Outside
	45,702,570	(gal)	(gpm)	(gpm)	(NTU)	(deg. F)				(NTU)	(NTU)	(NTU)		900,664	(gal)	(gpm)	(gpm)	(ft)	(ft)		
1	45,989,053	286,483	198.9	199	2.118	34.2	7.5	no	yes	0.031	0.040	0.029	6.25	900,945	281,000	195.1	198.0	35.2	35.2	2.69	-6
2	46,277,894	288,841	200.6	199	2.094	34.1	7.5	no	yes	0.031	0.039	0.028	6.23	901,230	285,000	197.9	195.0	35.4	35.3	2.83	1
3	46,567,785	289,891	201.3	201	2.115	34.1	7.5	no	yes	0.031	0.039	0.028	6.24	901,510	280,000	194.4	201.0	35.7	35.6	2.84	-2
4	46,858,647	290,862	202.0	201	2.103	34.0	7.5	no	yes	0.030	0.039	0.027	6.22	901,789	279,000	193.8	201.0	35.8	35.7	2.83	6
5	47,149,103	290,456	201.7	200	2.134	34.2	7.5	no	yes	0.031	0.040	0.027	6.21	902,072	283,000	196.5	194.0	35.5	35.4	2.71	7
6	47,436,857	287,754	199.8	200	2.167	34.1	7.5	no	yes	0.029	0.037	0.028	6.24	902,350	278,000	193.1	194.0	35.4	35.3	2.72	-3
7	47,725,543	288,686	200.5	199	2.219	34.1	7.5	no	yes	0.029	0.038	0.039	6.22	902,633	283,000	196.5	197.0	35.2	35.1	2.57	-1
8	48,013,035	287,492	199.6	199	2.153	33.9	7.5	no	yes	0.029	0.037	0.039	6.23	902,914	281,000	195.1	200.0	35.0	35.0	2.57	3
9	48,297,763	284,728	197.7	200	2.138	33.8	7.5	no	yes	0.029	0.037	0.038	6.23	903,192	278,000	193.1	196.0	34.8	34.7	2.61	-2
10	48,592,565	294,802	204.7	199	2.128	33.6	7.5	no	yes	0.031	0.038	0.041	6.23	903,476	284,000	197.2	200.0	34.7	34.7	2.51	12
11	48,880,658	288,093	200.1	200	2.160	33.3	7.5	no	yes	0.031	0.040	0.041	6.24	903,759	283,000	196.5	202.0	34.7	34.6	2.51	28
12	49,171,385	290,727	201.9	199	2.974	34.5	7.5	no	yes	0.029	0.036	0.040	6.24	904,041	282,000	195.8	187.0	34.4	34.3	2.47	24
13	49,456,883	285,498	198.3	199	3.159	34.8	7.5	no	yes	0.029	0.038	0.042	6.23	904,312	271,000	188.2	200.0	34.1	34.0	2.16	25
14	49,745,550	288,667	200.5	200	3.357	34.7	7.5	no	yes	0.028	0.037	0.041	6.23	904,595	283,000	196.5	195.0	33.7	33.6	2.18	7
15	50,035,925	290,375	201.6	200	3.927	34.7	7.5	no	yes	0.030	0.038	0.042	6.23	904,876	281,000	195.1	197.0	33.4	33.4	2.30	-2
16	50,325,650	289,725	201.2	202	5.704	34.5	7.5	no	yes	0.030	0.038	0.042	6.23	905,159	283,000	196.5	199.0	33.2	33.2	2.47	18
17	50,626,795	301,145	209.1	209	3.605	34.5	7.5	no	yes	0.027	0.035	0.031	6.20	905,454	295,000	204.9	209.0	33.5	33.5	2.36	29
18	50,932,200	305,405	212.1	210	4.105	34.5	7.5	no	yes	0.028	0.035	0.033	6.21	905,748	294,000	204.2	214.0	33.6	33.5	2.38	28
19	51,234,771	302,571	210.1	210	4.529	34.5	7.5	no	yes	0.027	0.035	0.032	6.22	906,047	299,000	207.6	206.0	33.4	33.4	2.52	26
20	51,541,631	306,860	213.1	210	3.305	33.8	7.5	no	yes	0.029	0.037	0.034	6.22	906,337	290,000	201.4	210.0	33.6	33.5	2.82	16
21	51,845,753	304,122	211.2	212	2.892	33.8	7.5	no	yes	0.029	0.037	0.034	6.23	906,636	299,000	207.6	214.0	33.7	33.7	2.70	18
22	52,150,667	304,914	211.7	211	3.011	33.8	7.5	no	yes	0.028	0.035	0.033	6.20	906,929	293,000	203.5	207.0	33.7	33.6	2.65	19
23	52,464,638	313,971	218.0	211	3.766	34.8	7.5	no	yes	0.028	0.037	0.034	6.22	907,234	305,000	211.8	208.0	33.7	33.6	2.43	22
24	52,763,621	298,983	207.6	211	5.081	33.8	7.5	no	yes	0.028	0.036	0.033	6.19	907,521	287,000	199.3	208.0	33.9	33.8	2.62	0
25	53,075,076	311,455	216.3	211	3.353	33.8	7.5	no	yes	0.028	0.037	0.034	6.22	907,826	305,000	211.8	211.0	34.1	34.1	2.44	5
26	53,381,855	306,779	213.0	210	3.658	33.9	7.5	no	yes	0.029	0.037	0.034	6.21	908,122	296,000	205.6	210.0	34.1	34.0	2.77	11
27	53,678,278	296,423	205.8	210	3.800	33.9	7.5	no	yes	0.029	0.038	0.035	6.21	908,411	289,000	200.7	211.0	34.1	34.1	2.57	18
28	53,981,396	303,118	210.5	209	3.897	34.0	7.5	no	yes	0.028	0.037	0.034	6.20	908,713	302,000	209.7	207.0	34.4	34.3	2.44	21
29	54,284,085	302,689	210.2	211	4.103	34.5	7.5	no	yes	0.029	0.038	0.035	6.19	909,005	292,000	202.8	208.0	34.6	34.5	2.36	22
30	54,589,404	305,319	212.0	211	3.921	34.1	7.5	no	yes	0.028	0.036	0.035	6.20	909,301	296,000	205.6	210.0	34.5	34.5	2.38	22
31																					
TOTALS	######													27152137	8637000						
AVERAGE	296,227.8		205.7	204.8	3.189	34.14				0.029	0.037	0.035	6.22		287,900	199.9	203.0	34.4	34.3	2.55	12
MAXIMUM	313971		218	212	5.704	34.80				0.031	0.040	0.042	6.25		305000	211.8	214.0	35.8	35.7	2.84	29
MINIMUM	284728		198	199	2.094	33.30				0.027	0.035	0.027	6.19		271000	188.2	187.0	33.2	33.2	2.16	-3

WATER PRODUCTION

May 2010

Date	Raw							Press. Relief Open?	Static Mixer Flush	Filters				Filter Effluent						Cl-17	Temperature
	Meter Reading	Raw Flow	Flow	Meter	Turb.	Temp.	DL Pump			#1	#2	Comb.	pH	Meter Reading	Filter Effluent	Flow	Meter	Old Res.	New Res.	(mg/L)	Outside
	54,589,404	(gal)	(gpm)	(gpm)	(NTU)	(deg. F)				(NTU)	(NTU)	(NTU)		909,301	(gal)	(gpm)	(gpm)	(ft)	(ft)		
1	54,895,695	306,291	212.7	211	4.029	34.1	7.5	no	yes	0.029	0.037	0.036	6.23	909,595	294,000	204.2	210.0	34.7	34.7	2.42	22
2	55,199,338	303,643	210.9	211	4.032	34.1	7.5	no	yes	0.027	0.035	0.035	6.23	909,890	295,000	204.9	205.0	34.9	34.8	2.40	22
3	55,501,851	302,513	210.1	208	3.956	34.2	7.5	no	yes	0.026	0.035	0.034	6.17	910,182	292,000	202.8	204.0	34.8	34.8	2.29	22
4	55,801,855	300,004	208.3	205	3.980	34.2	7.5	no	yes	0.025	0.034	0.035	6.19	910,474	292,000	202.8	200.0	34.8	34.7	2.30	22
5	56,097,523	295,668	205.3	200	4.121	34.2	7.5	no	yes	0.025	0.034	0.033	6.19	910,765	291,000	202.1	200.0	34.9	34.8	2.37	26
6	56,387,732	290,209	201.5	200	4.099	34.3	7.5	no	yes	0.025	0.033	0.032	6.18	911,042	277,000	192.4	200.0	34.7	34.6	2.35	16
7	56,681,682	293,950	204.1	203	4.246	34.7	7.5	no	yes	0.025	0.033	0.032	6.19	911,324	282,000	195.8	200.0	34.6	34.5	2.33	16
8	56,987,591	305,909	212.4	206	4.256	34.4	7.5	no	yes	0.027	0.035	0.034	6.17	911,627	303,000	210.4	164.0	34.9	34.9	2.31	26
9	57,282,732	295,141	205.0	201	4.277	34.4	7.5	no	yes	0.025	0.032	0.031	6.17	911,916	289,000	200.7	191.0	35.1	35.0	2.22	27
10	57,569,640	286,908	199.2	200	4.420	34.4	7.5	no	yes	0.025	0.034	0.031	6.20	912,193	277,000	192.4	200.0	35.1	35.0	2.44	28
11	57,861,843	292,203	202.9	199	4.475	34.4	7.5	no	yes	0.025	0.034	0.031	6.20	912,481	288,000	200.0	198.0	35.1	35.0	2.45	25
12	58,148,125	286,282	198.8	200	4.713	35.0	7.5	no	yes	0.025	0.035	0.031	6.20	912,757	276,000	191.7	193.0	35.0	34.9	2.41	35
13	58,436,637	288,512	200.4	201	3.938	34.1	7.5	no	yes	0.024	0.033	0.029	6.15	913,043	286,000	198.6	196.0	35.0	34.9	2.75	28
14	58,728,428	291,791	202.6	202	4.348	34.0	7.5	no	yes	0.025	0.035	0.030	6.15	913,325	282,000	195.8	200.0	34.9	34.8	3.25	30
15	59,029,033	300,605	208.8	208	3.887	34.1	7.5	no	yes	0.057	0.078	0.063	5.93	913,613	288,000	200.0	205.0	34.9	34.8	2.80	35
16	59,330,333	301,300	209.2	208	3.836	34.7	7.5	no	yes	0.022	0.032	0.027	6.02	913,902	289,000	200.7	206.0	34.8	34.8	3.07	27
17	59,634,175	303,842	211.0	210	3.341	34.0	7.5	no	yes	0.028	0.028	0.032	5.97	914,180	278,000	193.1	193.0	34.8	34.7	3.01	31
18	59,940,266	306,091	212.6	211	2.973	34.3	7.5	no	yes	0.022	0.032	0.029	6.02	914,472	292,000	202.8	210.0	34.6	34.5	2.36	35
19	60,249,620	309,354	214.8	214	3.251	34.8	7.5	no	yes	0.023	0.032	0.030	6.05	914,770	298,000	206.9	212.0	34.4	34.4	2.24	28
20	60,558,973	309,353	214.8	215	3.367	35.1	7.5	no	yes	0.048	0.060	0.052	6.00	915,074	304,000	211.1	214.0	34.8	34.7	1.45	28
21	60,869,226	310,253	215.5	216	3.094	35.4	7.5	no	yes	0.032	0.046	0.046	5.97	915,369	295,000	204.9	210.0	35.0	35.0	1.41	26
22	61,182,066	312,840	217.3	215	2.718	35.6	7.5	no	yes	0.031	0.047	0.038	6.00	915,670	301,000	209.0	211.0	35.4	35.3	1.48	23
23	61,496,266	314,200	218.2	214	2.910	35.5	7.5	no	yes	0.038	0.053	0.042	6.02	915,972	302,000	209.7	209.0	35.9	35.9	1.42	24
24	61,801,995	305,729	212.3	202	2.892	35.6	7.5	no	yes	0.044	0.059	0.049	6.04	916,258	286,000	198.6	257.0	36.2	36.1	1.41	29
25	62,085,415	283,420	196.8	198	2.988	35.8	7.5	no	yes	0.030	0.045	0.036	6.09	916,539	281,000	195.1	192.0	36.0	36.0	1.59	29
26	62,372,375	286,960	199.3	199	2.743	35.8	7.5	no	yes	0.030	0.043	0.036	6.07	916,812	273,000	189.6	195.0	35.8	35.7	1.62	46
27	62,657,480	285,105	198.0	205	2.907	36.1	7.5	no	yes	0.026	0.041	0.033	6.12	917,090	278,000	193.1	195.0	35.5	35.4	1.66	40
28	62,942,133	284,653	197.7	196	2.069	36.1	7.5	no	yes	0.030	0.037	0.036	6.14	917,368	278,000	193.1	194.0	35.5	35.4	1.58	36
29	63,220,977	278,844	193.6	194	2.086	36.7	7.5	no	yes	0.035	0.040	0.036	6.10	917,636	268,000	186.1	186.0	35.4	35.4	1.77	36
30	63,424,159	203,182	141.1	0	2.149		7.5	no	yes	0.038	0.060	0.100		917,835	199,000	138.2	0.0	34.5	34.5	0.66	37
31	63,670,555	246,396	171.1	194	2.611	36.1	7.5	no	yes	0.037	0.043	0.032	6.09	918,078	243,000	168.8	194.0	34.5	34.5	2.02	37
TOTALS		######												28331252	8777000						
AVERAGE		292,940.4	203.4	198.3	3.507	34.87				0.030	0.040	0.038	6.11		283,129	196.6	195.0	35.0	35.0	2.12	29
MAXIMUM		314200	218	216	4.713	36.70				0.057	0.078	0.100	6.23		304000	211.1	257.0	36.2	36.1	3.25	46
MINIMUM		203182	141	0	2.069	34.00				0.022	0.028	0.027	5.93		199000	138.2	0.0	34.4	34.4	0.66	16

WATER PRODUCTION

June 2010

Date	Raw							Press. Relief Open?	Static Mixer Flush	Filters				Filter Effluent						Cl-17	Temperature
	Meter Reading	Raw Flow	Flow	Meter	Turb.	Temp.	DL Pump			#1	#2	Comb.	pH	Meter Reading	Filter Effluent	Flow	Meter	Old Res.	New Res.	(mg/L)	Outside
	63,670,555	(gal)	(gpm)	(gpm)	(NTU)	(deg. F)				(NTU)	(NTU)	(NTU)		918,078	(gal)	(gpm)	(gpm)	(ft)	(ft)		
1	63,944,975	274,420	190.6	193	3.417	34.1	7.5	yes	yes	0.069	0.086	0.064	6.01	918,340	262,000	181.9	190.0	34.0	34.0	2.20	36
2	64,217,702	272,727	189.4	2	3.368	34.8	7.5	yes	yes	0.028	0.035	0.029	6.32	918,591	251,000	174.3	0.0	33.6	33.6	2.08	31
3	64,475,352	257,650	178.9	212	0.042	35.5	7.5	yes	yes	0.028	0.034	0.027	6.44	918,839	248,000	172.2	207.0			1.45	
4	64,783,546	308,194	214.0	212	4.017	34.8	7.5	no	yes	0.027	0.033	0.029	6.46	919,140	301,000	209.0	207.0	33.5	33.5	0.98	33
5	65,094,961	311,415	216.3	211	4.650	37.0	7.5	no	yes	0.028	0.033	0.030	6.49	919,442	302,000	209.7	211.0	33.7	33.7	1.02	37
6	65,401,413	306,452	212.8	210	4.073	39.4	7.5	no	yes	0.029	0.033	0.032	6.46	919,738	296,000	205.6	201.0	33.7	33.7	1.00	40
7	65,697,941	296,528	205.9	211	3.527	39.2	7.5	no	yes	0.030	0.034	0.034	6.46	920,027	289,000	200.7	209.0	33.9	33.9	1.18	38
8	65,997,903	299,962	208.3	207	3.388	39.2	7.5	no	yes	0.031	0.035	0.034	6.50	920,316	289,000	200.7	201.0	33.9	33.9	1.19	29
9	66,301,871	303,968	211.1	209	2.995	40.1	7.5	no	yes	0.035	0.041	0.038	6.42	920,609	293,000	203.5	202.0	34.1	34.1	1.44	39
10	66,608,103	306,232	212.7	210	2.814	42.1	7.5	no	yes	0.041	0.046	0.043	6.41	920,902	293,000	203.5	205.0	34.0	34.0	1.84	40
11	66,912,077	303,974	211.1	224	2.797	46.2	7.5	no	yes	0.037	0.040	0.040	0.64	921,164	262,000	181.9	210.0	33.6	33.6	1.76	43
12	67,219,556	307,479	213.5	209	2.618	47.1	7.5	no	yes	0.033	0.035	0.037	6.22	921,456	292,000	202.8	202.0	33.9	33.9	1.71	38
13	67,528,165	308,609	214.3	210	2.652	49.5	7.5	no	yes	0.032	0.034	0.037	6.36	921,750	294,000	204.2	206.0	34.0	34.0	1.88	37
14	67,828,889	300,724	208.8	210	2.306	52.6	7.5	no	yes	0.033	0.035	0.038	6.29	922,040	290,000	201.4	208.0	34.2	34.2	1.71	53
15	68,131,650	302,761	210.3	211	6.283	54.2	7.5	no	yes	0.028	0.030	0.035	6.45	922,338	298,000	206.9	206.0	34.2	34.2	1.55	48
16	68,435,057	303,407	210.7	208	4.932	54.3	7.5	no	yes	0.029	0.030	0.037	6.49	922,627	289,000	200.7	198.0	34.3	34.3	1.41	52
17	68,736,375	301,318	209.2	208	4.531	55.2	7.5	no	yes	0.029	0.030	0.036	6.49	922,913	286,000	198.6	201.0	33.9	33.9	1.33	50
18	69,038,107	301,732	209.5	208	4.473	55.7	7.5	no	yes	0.029	0.030	0.037	6.46	923,204	291,000	202.1	203.0	33.9	33.9	1.32	50
19	69,341,462	303,355	210.7	209	3.466	56.6	7.5	no	yes	0.030	0.031	0.038	6.47	923,498	294,000	204.2	201.0	34.1	34.1	1.36	52
20	69,652,686	311,224	216.1	211	2.802	58.9	7.5	no	yes	0.030	0.031	0.039	6.29	923,795	297,000	206.3	197.0	34.2	34.2	1.38	50
21	69,945,466	292,780	203.3	211	2.258	59.5	7.5	no	yes	0.030	0.031	0.037	6.32	924,072	277,000	192.4	205.0	34.2	34.3	1.26	59
22	70,257,586	312,120	216.8	210	2.070	61.0	7.5	no	yes	0.030	0.030	0.036	6.28	924,368	296,000	205.6	209.0	34.3	34.4	1.35	50
23	70,555,442	297,856	206.8	211	2.083	62.3	7.5	no	yes	0.030	0.030	0.035	6.31	924,652	284,000	197.2	207.0	34.5	34.5	1.50	51
24	70,858,893	303,451	210.7	210	2.083	63.3	7.5	no	yes	0.030	0.030	0.035	6.42	924,945	293,000	203.5	204.0	34.4	34.5	1.64	53
25	71,165,825	306,932	213.1	210	2.313	63.0	7.5	no	yes	0.030	0.030	0.033	6.44	925,230	285,000	197.9	204.0	34.4	34.5	1.63	52
26	71,468,444	302,619	210.2	211	2.227	62.0	7.5	no	yes	0.031	0.030	0.028	6.47	925,519	289,000	200.7	209.0	34.3	34.4	1.63	47
27	71,770,829	302,385	210.0	211	2.374	59.8	7.5	no	yes	0.030	0.030	0.036	6.48	925,807	288,000	200.0	206.0	34.4	34.5	1.56	46
28	72,073,995	303,166	210.5	210	2.425	58.9	7.5	no	yes	0.030	0.030	0.036	6.49	926,096	289,000	200.7	209.0	34.4	34.5	1.53	42
29	72,376,111	302,116	209.8	209	2.433	60.2	7.5	no	yes	0.030	0.030	0.037	6.45	926,391	295,000	204.9	206.0	34.4	34.5	1.41	58
30		#######	-50261.2				7.5	no	yes						#######	######					
31																					
TOTALS		######												26747809	#######						
AVERAGE		#######	-1,473.9	202.7	3.083	50.22				0.032	0.035	0.036	6.20		#######	-21,251.8	197.4	34.1	34.1	1.49	45
MAXIMUM		312120	217	224	6.283	63.30				0.069	0.086	0.064	6.50		302000	209.7	211.0	34.5	34.5	2.20	59
MINIMUM		-72376111	-50261	2	0.042	34.80				0.027	0.030	0.027	0.64		#######	######	0.0	33.5	33.5	0.98	29

WATER RIGHTS

Alaska DNR Water Rights

Case File: ADL 401827 New Search

See Case Abstract

Customer id: **000126367** **KOTZEBUE CITY OF**

Case Status: **PERMIT ISSUED** *Status Date:* **10/02/1987**

Other num: ***None*** *File Location:* **WATER MGT-ANCHORAGE**

Source: **A** *Source Type:* **LAKE OR OUTLET** *Priority Date:* **08/20/1979**

Meridian: **K** *Township:* **017N** *Range:* **018W** *Section:* **13** *Quarter Section:* **NE** *Quarter of Quarter Section:* **NE**

Latitude: **665246.1** *Longitude:* **16230220W**

Usage: **A** *Sic Code:* **4941** **PUBLIC WATER SUPPLY**
Quantity: **325000.0** **Gallons / Day** *Starting MM/DD:* **01/01** *Ending MM/DD:* **12/31**

Subdivision: **KM,T17N,R18W,SEC13,NENE**

Creek, River, Lake: **DEVILS LK, VORTAC RES**

Additional Information:

EXPIRATION DATE IS SET AT 5 YEARS FROM DATE WE RECEIVED REQUEST FOR RENEWAL.

Back

Last updated on 10/07/2010.

Not sure who to contact? Have a question about DNR? Visit the Public Information Center.
Report technical problems with this page to the Webmaster.

Site optimized for Netscape 7, IE 6 or above.
This site also requires that all COOKIES must be accepted.

Case Abstract

File Type: **ADL** File Number: **401827**

See Township, Range, Section and Acreage? **Yes**

10/07/2010

Customer: 000126367 KOTZEBUE CITY OF
P.O. BOX 46
KOTZEBUE AK 99752

Case Type: 801 WATER RIGHTS DNR Unit: 800 WATER

File Location: WANC WATER MGT-ANCHORAGE

Case Status: 35 PERMIT ISSUED Status Date: 10/02/1987

Total Acres: 0.000 Date Initiated: 05/02/1982

Office of Primary Responsibility: WANC WATER MGT-ANCHORAGE

Last Transaction Date: 05/06/2004 Case Subtype: SUR SURFACE

Last Transaction: OFF OFFICE OF PRIMARY RESPONSIBILITY CHANGED

Meridian: K **Township:** 017N **Range:** 018W **Section:** 11 **Section Acres:** 0
Meridian: K **Township:** 017N **Range:** 018W **Section:** 13 **Section Acres:** 0

Case Actions

07-14-1982 CONVERTED FROM OLD LAND RECORD SYSTEM - UNVERIFIED
SEE OLD SERIAL PAGE FOR MORE INFORMATION

08-02-1986 CASEFILE CUSTOMER DOCUMENTED
CUSTOMER NUMBER 000126367 KOTZEBUE,CTY,
UNIT CODE 800 WATER MANAGEMENT
RELATIONSHIP CODE 10 OWNER
THIS TRANSACTION WAS GENERATED BY THE CONVERSION TO THE NEW
CUSTOMER SYSTEM TO DOCUMENT THE UNIT AND RELATIONSHIP CODES

08-07-1987 PERMIT AMENDED
STATUS 11 11 PERMT ISSD
PERMIT SIGNED BY GASCHULTZ
PERMIT AMENDED TO EXTEND EXPIRATION DATE

10-02-1987 PERMIT AMENDED
STATUS 11 11 PERMT ISSD
PERMIT SIGNED BY GASCHULTZ
AMENDED TO ADD WATER SOURCE

12-30-2002 STATUS CODE STANDARDIZED
STATUS CODE 35 ISS/APPRV/ACTV AUTH
***** STATUS CODE STANDARDIZATION *****
STATUS CODE CHANGED BY BATCH UPDATE

04-14-2003 SUMMARY RECORD DATA CHANGED/CORRECTED
OFF PRIM RESPONS WFBX WATER MGT-FAIRBANKS
CHANGED THE OFFICE OF PRIMARY RESPONSIBILITY TO NEW CODES

05-06-2004 OFFICE OF PRIMARY RESPONSIBILITY CHANGED
OLD CODE WFBX WATER MGT-FAIRBANKS
NEW CODE WANC WATER MGT-ANCHORAGE
DATA ENTERED BY MLW
CHANGED OFFICE OF PRIMARY RESPONSIBILITY FROM FAIRBANKS TO ANCHORAGE.

Legal Description

THE CITY OF KOTZEBUE, LOCATED WITHIN SECTIONS 3 AND 10, TOWNSHIP 17 NORTH, RANGE 18 WEST, KATEEL RIVER MERIDIAN. WATER IS TO BE

WITHDRAWN FROM DEVILS LAKE WITHIN SECTIONS 7 AND 18, TOWNSHIP 17 NORTH, RANGE 17 WEST, KATEEL RIVER MERIDIAN, PIPED TO VORTAC RESERVOIR WITHIN SECTIONS 11 AND 12, TOWNSHIP 17 NORTH, RANGE 18 WEST, KATEEL RIVER MERIDIAN, AND PIPED TO THE MUNICIPAL WATER SYSTEM WITHIN SECTIONS 3 AND 10, TOWNSHIP 17 NORTH, RANGE 18 WEST, KATEEL RIVER MERIDIAN. THIS WATER IS TO BE USED IN A PUBLIC WATER SYSTEM.

End of Case Abstract

APPENDIX B

TRIP REPORTS

R&M CONSULTANTS, INC. (907) 522-1707, FAX (907) 522-3403, www.rmconsult.com
9101 Vanguard Drive, Anchorage, Alaska 99507

Memorandum

To:	File
From:	Frank Rast, P.E.
Subject:	Kotzebue Water Plant Site Visit
Date:	September 9, 2010
Project #:	1664.01 Task 1

Trip Purpose

Meet with the City and USDA to discuss the Draft Preliminary Engineering Report and tour the existing water plant.

Draft PER Meeting

Attendees

Tim Krug, USDA Rural Development
Tasha Deardorff, USDA Rural Development
Derek Martin, City of Kotzebue Public Works Director
Rick Hohnbaum, City of Kotzebue City Manager
Ryan Cope, City of Kotzebue Finance Manager
Jason Jessup, City of Kotzebue Public Works
Lorraine Hunnicut, City of Kotzebue
Matthew, Water Plant Operator
Frank Rast, R&M Consultants

New Water Plant Footprint- USDA will fund small office, bathroom/shower and other functions required to operate plant. USDA will not fund training room.

USDA will require documentation in Final PER on why existing plant cannot be rehabilitated.

USDA needs an update to the short lived asset document.

KEA began supplying waste heat in 2006 through a finished waterline loop to heat raw water. Water is at 90 degrees at the KEA plant and 70 degrees at the plant.

The Final PER will include treatment option capital and M&O costs. City to provide current M&O costs.

Reservoir 1 was inspected in 2008, Reservoir 2 was constructed in 2004 and inspected in 2007.

City would like a Final PER by the end of 2010.

Water Plant Tour

Following the meeting USDA, R&M and the City (Rick, Matthew, Derek and Jason) toured the existing water plant. The plant was constructed in phases over 30 years as water demand and treatment requirements changed. The current plant does not meet current building and electrical code requirements, and is difficult to operate and maintain. Maintenance and operation (M&O) costs are high due to a variety of factors including building condition, aged equipment, poor layout, inefficient mechanical and electrical systems. Raw Water Turbidity in NTU's varies from 0.8 to 15 and color up to 150 depending on time of year. Plant currently treats about 210 GPM with between 30,000 and 50,000 gallons of backwash water per day.

Existing Raw Waterline Entrance to Headworks

Existing Headworks

Existing Finished Water Loop Circulation Pumps

To keep the City's water mains unfrozen the City circulates water from the plant and adds heat to the loops as required.

Piping and Pressure Tank

Because the existing plant was constructed in phases as water demand grew and water quality standards became more stringent the existing plant is not laid out in a logical manner. Access is difficult and most of the equipment and piping has reached the end of it's useful service life.

Existing Pressure Pumps

Existing Motor Control Center

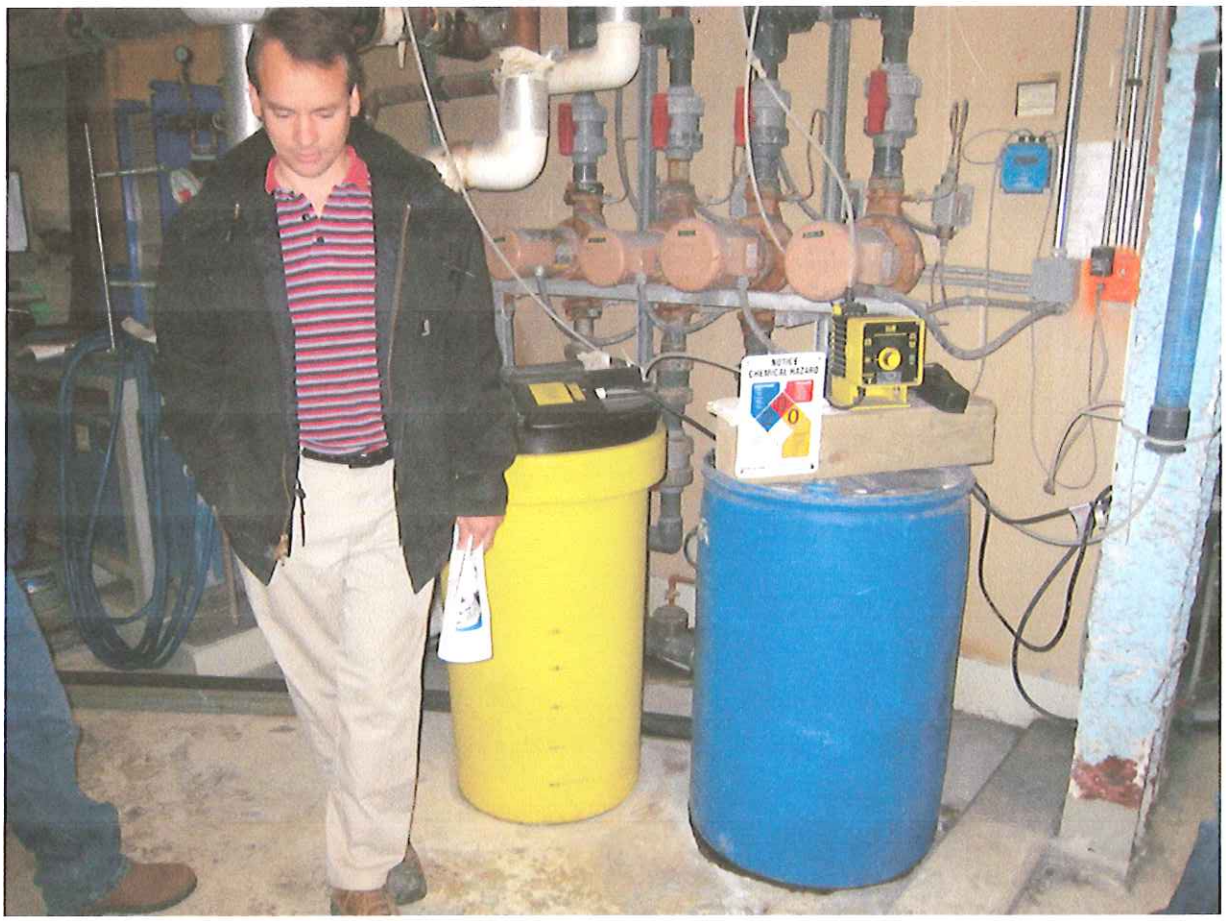

Existing Chemical Feed (Polymer)

Note that the chemical feed pump is not properly mounted and rests on top of the chemical supply barrel. This is typical of the entire plant where systems have been added to aid in water process

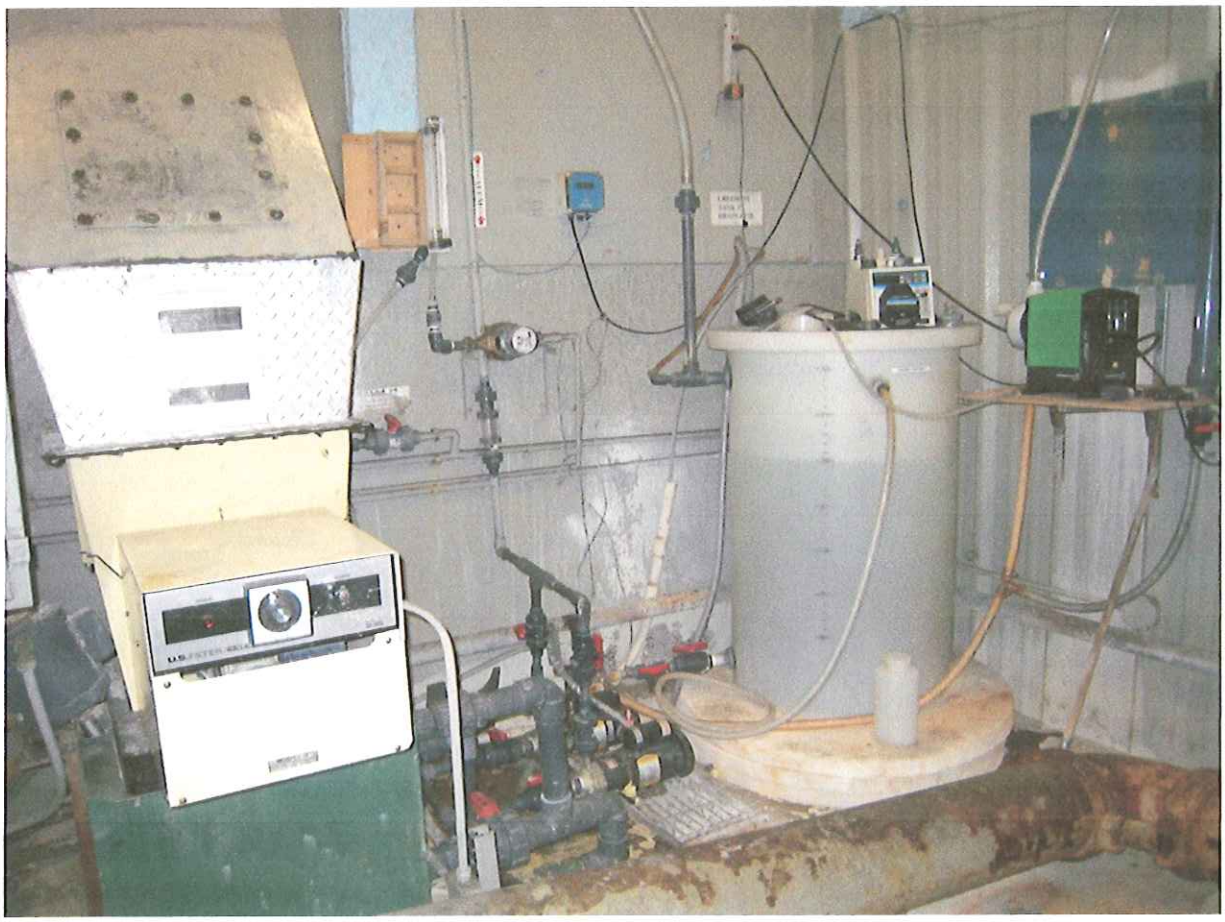

Existing Chemical Feed (Alum)

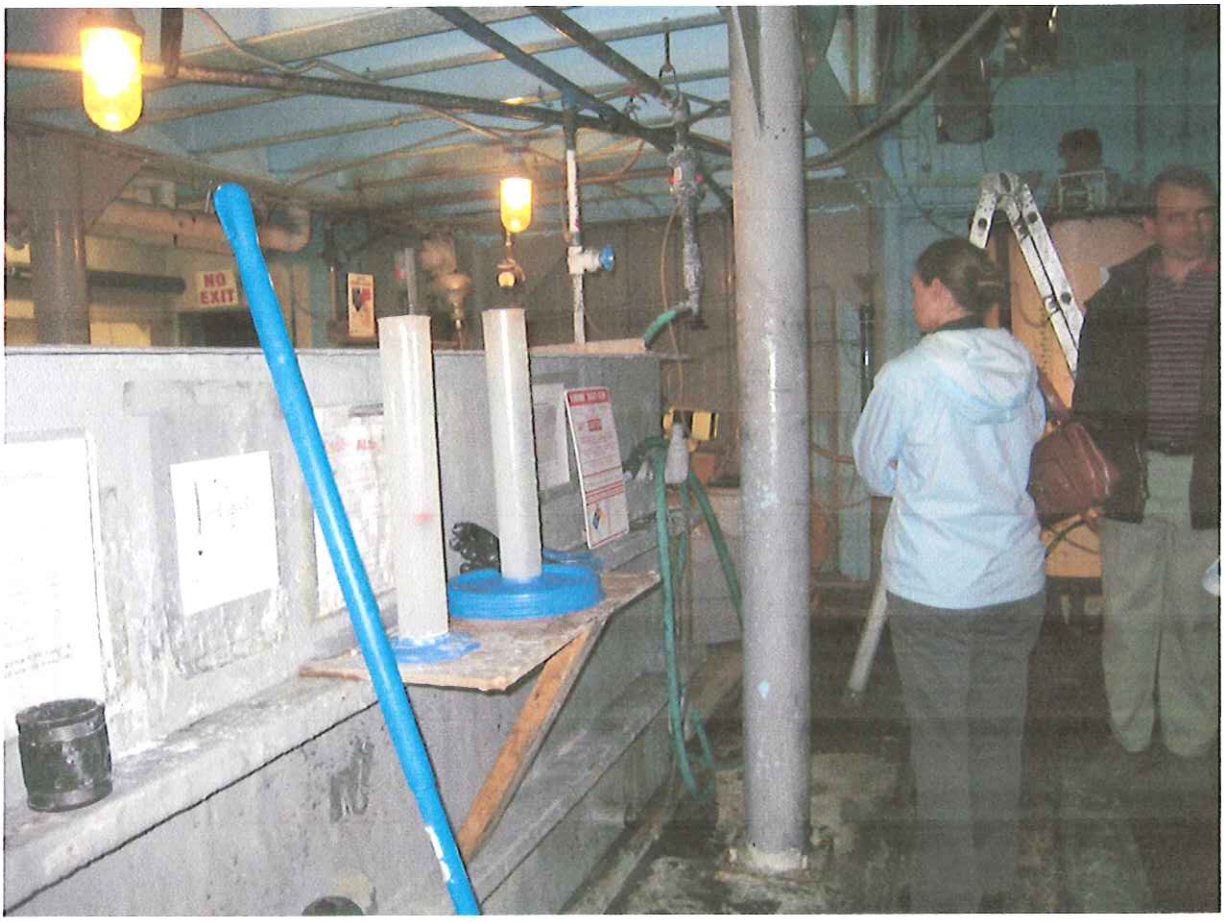

Sedimentation Chamber

Gravity Filter Unit

Powder Activated Carbon Tank

Existing Boilers

Existing Standby Generator

The existing genset has low hours (300) and is exercised on a regular basis. Utility power has been reliable but standby power is essential in the event of an extended power outage. The genset could be relocated to a new water plant.

Existing Laundry and Storage

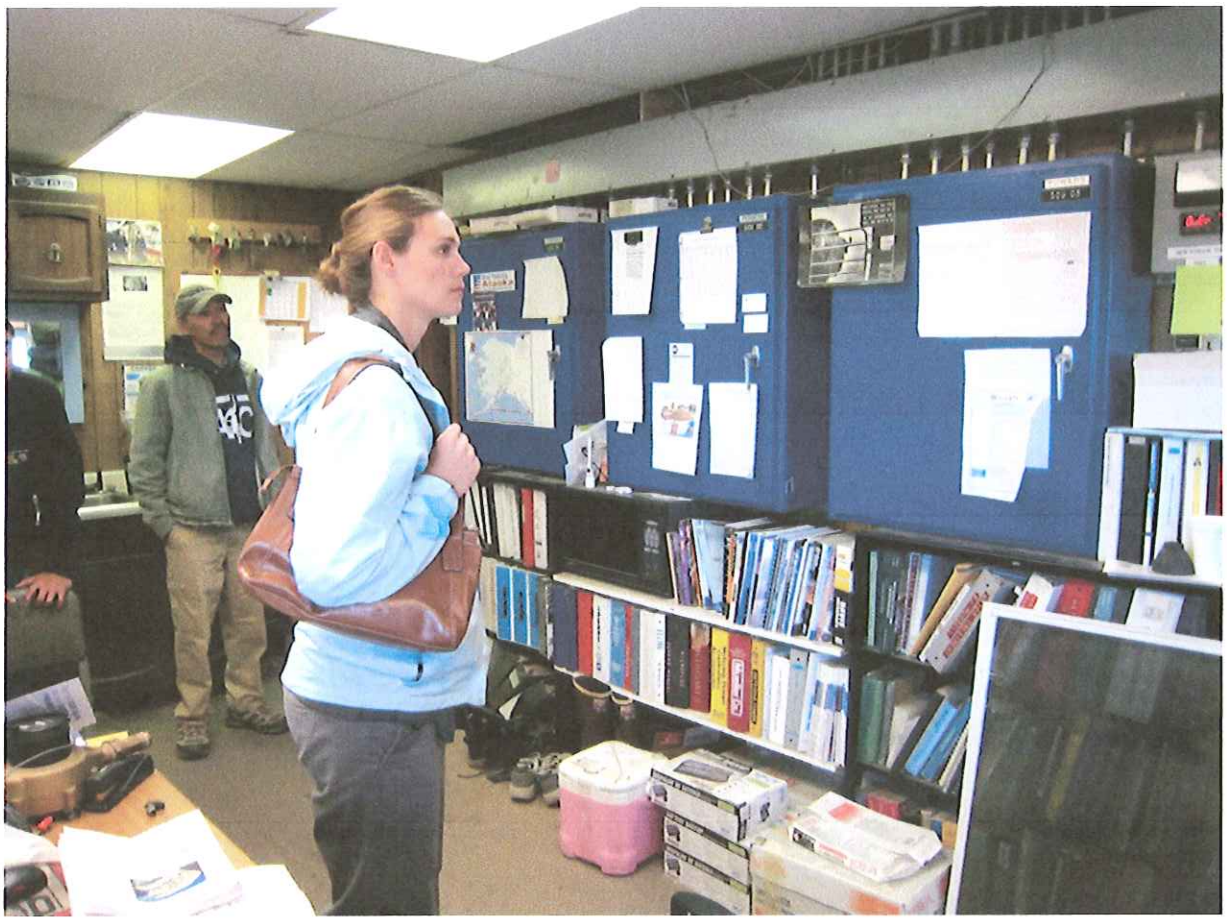

Existing SCADA

The existing Supervisory Control and Data Acquisition Center is located in the Water Plant. The SCADA monitors both the City Water and Wastewater System (Lift Stations). The SCADA system is dated and in need of replacement. Providing SCADA in the water plant is an essential function to monitoring the City's water and wastewater system.

Water Sampling Station

Second Sedimentation Basin

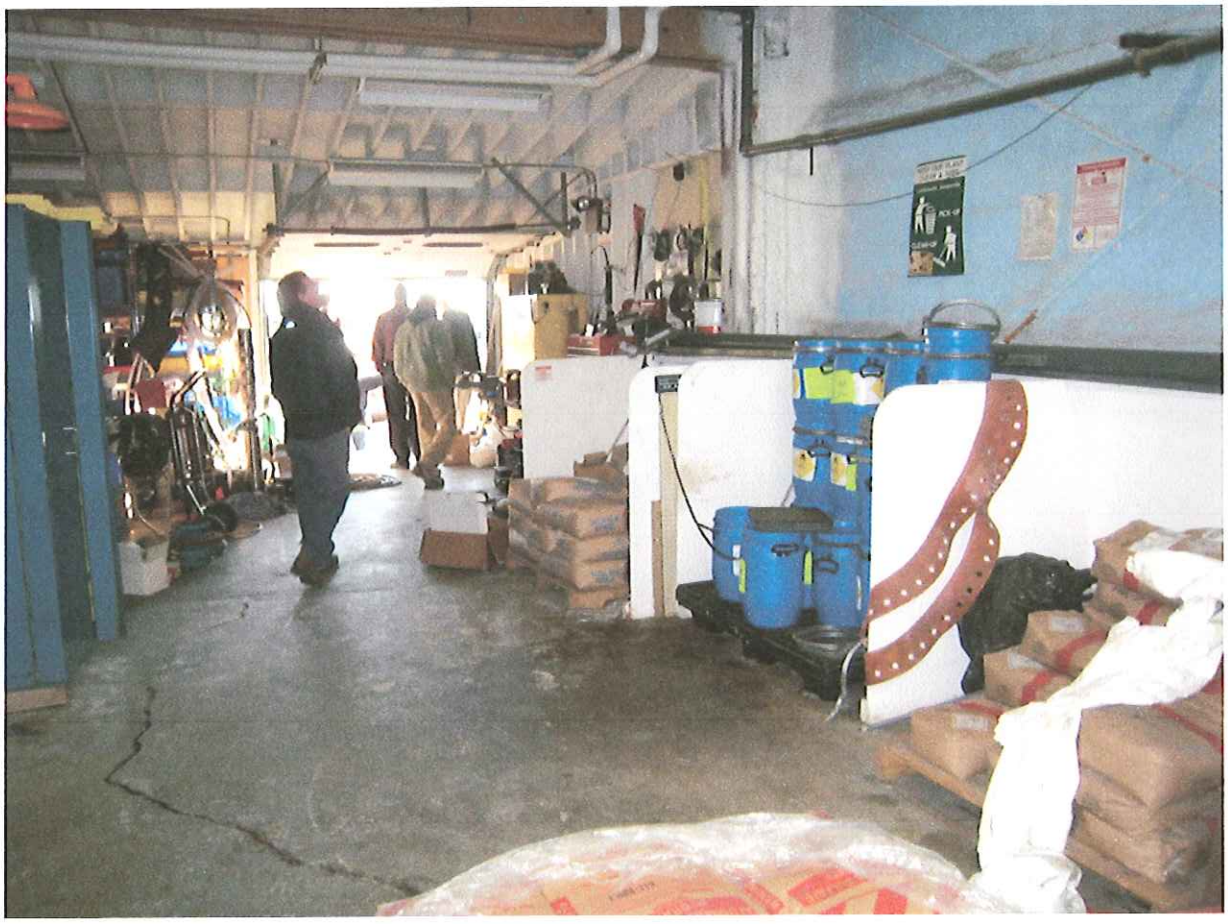

Chemical Storage

Existing interior chemical storage is inadequate. Due to Kotzebue's remote location chemical shipment is by summer barge (once/year). Air freight of chemicals is cost prohibitive. Chemicals are stored in an unheated Quonset hut and outside on pallets and transferred into available warm storage as required. Transfer is problematic during the winter months.

Loading Dock

Note the lack of access to the chemical storage area (pallet used as stairway). Filter backwash tank to the right. Tank required so that wastewater system is not surcharged. Note the wrapped exterior stored chemicals to the left.

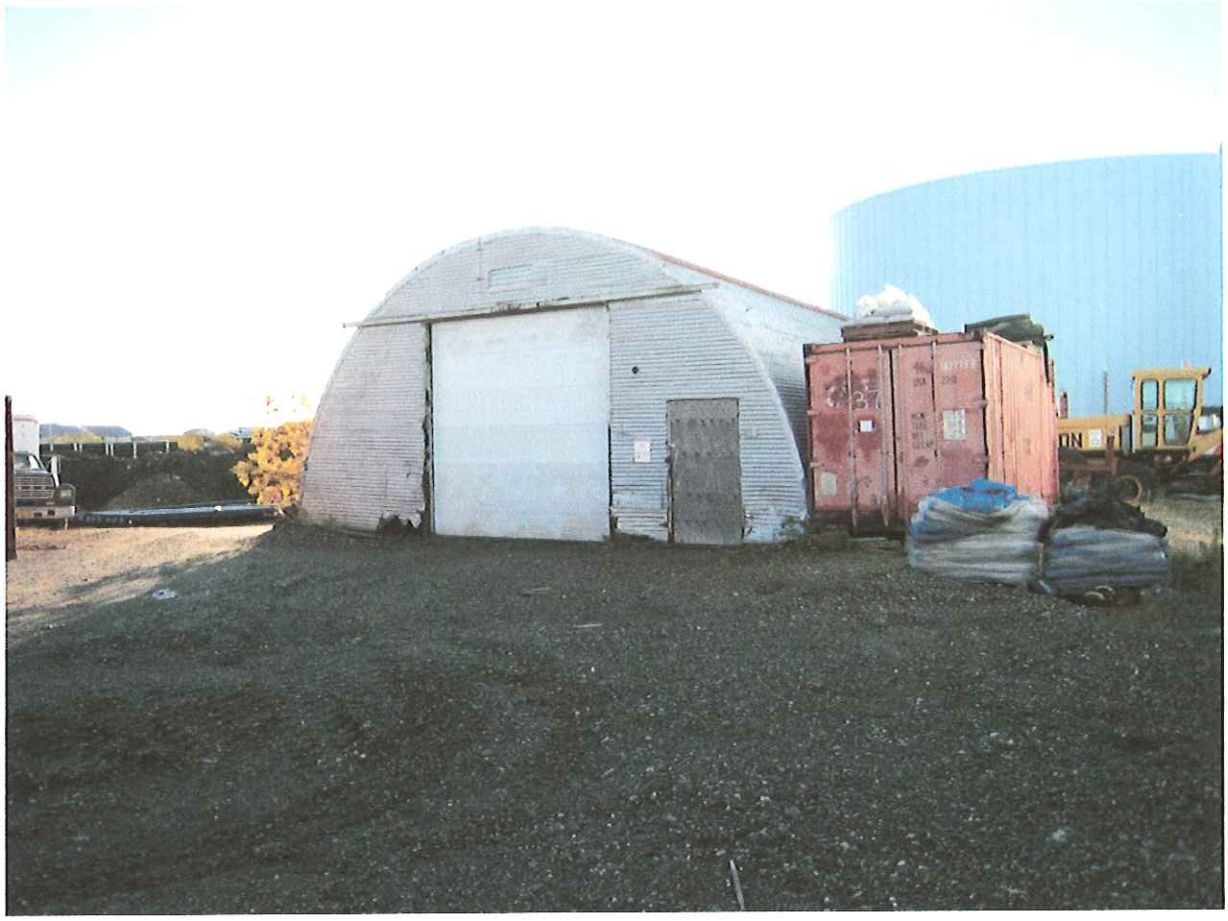

Exterior Chemical Storage

Existing Water Plant

Summary

The existing water plant has reached the end of its useful service life. It would be impractical to rehabilitate the existing plant both from both an operational standpoint (maintaining treatment during construction) and a cost standpoint.

Lee Blumell

From: Derek Martin [kotzengs@otz.net]
Sent: Thursday, October 14, 2010 4:22 PM
To: Lee Blumell
Subject: FW: Kotzebue Water Plant PER Status
Attachments: image003.jpg; image003.jpg; image001.jpg; image003.jpg

Lee, one more thing. As we begin to look at and determine which treatment process would work for Kotzebue, are there any of these treatment alternatives currently being used in the State? For instance, Sea water/RO in Red Dog or the MF/NF system in Barrow…. Are there any other treatment plants in the State that we as future owners of a new system could visit, familiarize ourselves with their operations/maintenance etc… before we ultimately decide on ?

Thanks again,
Derek

From: Derek Martin [mailto:kotzengs@otz.net]
Sent: Thursday, October 14, 2010 3:57 PM
To: 'Lee Blumell'
Cc: 'Rick Hohnbaum'; 'wtpotz@otz.net'
Subject: FW: Kotzebue Water Plant PER Status

Lee,
We have nearly completed our review of the 65% submittal of the PER report. I'd like to summarize our comments below with this email in lieu of sending a review letter if that's ok with you? We'll also be sending to you a marked up copy of the 65% submittal.

Treatment alternatives. Part of the RFP the City sent out, was to evaluate the Pilot Study Report and its treatment recommendation. Was the Pilot study already performed going to be included in the PER Report and recommendations of this report/treatment option going to be evaluated? If not, why? If so, was it included in section 6.1.1 Conventional Filtration?

Non-compliance issues with existing plant. Can we describe somewhere in the report other than in 4.1.1.1 Current Regulatory Requirements.

a. Can we state in more detail that clearly, our non-compliance is based on outdated or inadequate treatment processes? Merely stating our non-compliance is ok, but we as non-technical readers should be able to understand that a need exists.
b. The non-compliance should be more significantly noted throughout the report.

Treatment Alternatives: While performing the matrix of the various treatment alternatives, please keep in mind that our current treatment process requires 4-employees rotating on shift, all days of the week, 8AM-5PM. While we look at various alternatives, we'd like to at least keep the status quo, 4 employees, 7-days/week, 8AM-5PM, and would prefer nothing more than that. On the weekends, we only require 2-employees on shift.

Treatment Chemicals: Some further consideration should be made towards selection of a new treatment process and its relation to the type of chemicals used. Hypothetically, if we were to select the Ion Exchange method, one of the disadvantages listed was shipping chemicals "Wet", and the need for freeze protection. Obviously we would need warm storage for this chemical, but what quantity? Treatment selection as well as chemicals used for treatment is still a large determining factor, since we try to Barge our materials in during the summer months.

Other corrections were made in the PER report itself which is being mailed to you, some typos and some corrected information, fuel costs, electricity costs, etc…. have been marked in the report itself.

Thank you for this opportunity to provide feedback for this report, and thank you for sharing with us. We look forward to your feedback, and welcome any further discussions you may wish to have (markups in the mail). This is such an important project for us, and we know that you are hard at work assisting the City of Kotzebue towards a new Water Treatment Plant, and thank you for your work.

Derek

From: Frank Rast [mailto:frast@rmconsult.com]
Sent: Friday, October 01, 2010 9:06 AM
To: Derek Martin
Cc: Lee Blumell
Subject: RE: Kotzebue Water Plant PER Status

Derek

Hope your hunt was successful. Please send the comments and information to Lee.

Thanks

Frank

From: Derek Martin [mailto:kotzengs@otz.net]
Sent: Thursday, September 30, 2010 5:04 PM
To: Frank Rast
Subject: RE: Kotzebue Water Plant PER Status

Hi Frank, I received your voicemail last week also, and yes was out last week hunting caribou.

I do have some material that we'd like to send to you, some comments from Rick and some from our Water Plant operators. I'd like at least another day to compile the information to send to you and your guys.

Thanks again for meeting with us earlier this month. It was well worth it! I'll be in contact with you soon.

Derek

From: Frank Rast [mailto:frast@rmconsult.com]
Sent: Thursday, September 23, 2010 9:50 AM
To: Derek Martin
Cc: Greg Jones; Dan Schubert; Lee Blumell; Kevin Pendergast; Jason Jessup
Subject: Kotzebue Water Plant PER Status

Derek

R&M and GV Jones met earlier this week to coordinate the PER. GV Jones will ask their suppliers to provide treatment equipment costs by the end of September for the alternative summary.
We hope to submit the alternative summary table with capital and O&M costs, and the paragraph on ancillary facilities (lab, office, shower/restroom and associated footage) by mid October.

We understand that the City currently has 4 operators, we were going to assume 100K per year salary and benefits per operator. Can you verify that number with Rick, it may be a little high.

Please call Lee, or me with any questions.

Frank

Frank Rast, P.E.

Senior Vice President-Engineering

R&M CONSULTANTS, INC.

9101 Vanguard Drive
Anchorage, AK 99507
907.646.9614 Direct
907.230.4662 Cell
907.522.3403 Fax
www.rmconsult.com

United States Department of Agriculture
Rural Development
Alaska USDA Service Center

March 31, 2011

Derek Martin, Acting City Manager
City of Kotzebue
PO Box 46
Kotzebue, AK 99752

Dear Mr. Martin:

Thank you for providing Rural Development (RD) with draft copies of the engineering and environmental report for the proposed construction of a water treatment plant in the City of Kotzebue. The preparation of these reports was partially funded under a pre-planning grant (PPG) from Rural Development ($82,500).

The following are comments or updates that must be completed to the reports prior to finalizing.

1. Copies of previous structural evaluations (referenced in PER on page 3) should be incorporated into the appendix.
2. Under the Rural Alaska Village grant (RAVG) program, documentation of a dire sanitation condition must exist for grant funds to be used. If the City of Kotzebue intends to apply to RD for a construction project, a letter must be provided from a State agency that indicates one the following dire conditions exist. This definition is provided in RUS Instruction 1780 and is specific to the RAVG.
    a. Recurring instances of a waterborne communicable disease has been documented; or
    b. No community-wide water and sewer system exists and individual residents must haul water to or human waste from their homes and/or use pit privies.
3. In a September 9, 2010 site visit to Kotzebue, RD indicated that rehabilitation of the existing water treatment plant must be examined as an alternative. The evaluation of this alternative must be incorporated into all required sections, including life cycle cost analysis, of the report. If the existing facility is not adequate, specific references to documentation must be provided to indicate the reason and life expectancy of the existing plant.
4. "Do nothing" must be included as an alternative.
5. Annual short-lived asset reserve must be incorporated into the operation and maintenance costs.
6. Pilot projects are not considered eligible for RD funds (reference on page 69). Proven technology must be utilized if grant funds will be requested from RD.

800 West Evergreen • Suite 201 • Palmer, AK 99645
Phone: (907) 761-7705 • Fax: (907) 761-7783 • TDD: (907) 761-7786

Committed to the future of rural communities.

"USDA is an equal opportunity provider, employer and lender."
To file a complaint of discrimination write USDA, Director, Office of Civil Rights, 1400 Independence Avenue, S.W., Washington, DC 20250-9410 or call (800)795-3272 (voice) or (202) 720-6382 (TDD).

7. The equipment listed on pages 16 and 17 should incorporate the dozer and asphalt repair equipment. City officials should review this list to ensure that all equipment available and conditions provided are accurate.
8. RD understands that the City of Kotzebue pays considerable fees for waste heat. A cost comparison should be completed to provide documentation on the amount of operation and maintenance savings resulting from the incorporation of waste heat.
9. Does the City of Kotzebue own all the land for the proposed facility? Are some of the facilities encroaching on school district property?
10. Total cost estimates must include all project costs. Kotzebue administration fees, resident inspection fees, engineering construction management fees, and demolition fees must be incorporated for all alternatives examined.
11. The recommended building size should be addressed for each individual alternative. Different treatment systems do not require the same building area and may result in lower construction costs.
12. Present Worth (life cycle) cost analysis (an engineering economics technique to evaluate present and future costs for comparison of alternatives) should be completed to compare the feasible alternatives. All of the items from the cost estimate should be included in the analysis. The "real" federal discount rate from Appendix C of OMB Circular A-94 should be used for determining the present worth of the uniform series of O & M values (in today's dollars) and the salvage value. A 20-year real interest rate may be interpolated as the average of the 10-year and 30-year rates on the web page at: www.whitehouse.gov/omb/circulars/a094/a94_appx-c.html.If. If the lowest life cycle alternative is not selected, supporting documentation supporting the selection must be provided.
13. If adequately maintained, the useful life of a water treatment plant should be at least 30 years. The utilization of 30 years should be incorporated into the life cycle cost analysis.
14. If the range of present worth values is small, then non-monetary factors should be considered in determining which alternative should be selected. Indication of any of those factors must be incorporated into the report.
15. Page 25 of the report indicated maximum of 432,000 gpd. Page 48 indicated maximum flow of 473,100 gpd for 2010. What is the maximum flow rate for the current facility?
16. The PER indicates a phased approach for the construction of the water treatment plant. If RD funds will be requested, each proposed phase of the system must be operable upon completion. A statement indicating that each phase will be operable must be incorporated into the PER document. If the system will not be operational upon completion of each phases, a phased approach will not be considered for an RD application.
17. Page 16 of the environmental report indicates that upgrades may result in more efficient operation and the potential to lower rates for utility customers. Please be aware that if a grant application will be submitted to RD, the reduction in utility rates will not be considered. The intent of RD's grant program is not to subsidize community's utility rates.

18. Per RUS Bulletin, financial analysis of the existing facility (revenues and expenditures) must be incorporated into the PER. Existing costs should be compared to alternatives.
19. Income (rate structure) and expenses must be examined for each alternative.

It is recommended that the State of Alaska Village Safe Water program be provided copies of the reports for review and comment.

If you have questions on the reports, please don't hesitate to contact me at 907-271-2424 extension 118.

Sincerely,

Tasha Deardorff

TASHA DEARDORFF
RAVG Program Specialist

cc: Tim Krug, State Engineer

CITY OF KOTZEBUE
"Gateway to the Arctic"

P.O. Box 46
Kotzebue, Alaska 99752

City Hall
(907) 442-3401

Police Dept.
(907) 442-3351

Fire Dept.
(907) 442-3404

Public Works
(907) 442-3401

April 20, 2011

Tasha Deardorff, RAVG Specialist
U.S. Department of Agriculture, Rural Development
510 "L" Street, Suite 410
Anchorage, Alaska 99501

Sbj: City of Kotzebue Water Treatment Plant - Draft PER/ER
March 31, 2011 USDA Comments

Dear Ms. Deardorff:

Thank you for your review and comments regarding the draft PER/ER prepared by R & M Consultants for the City of Kotzebue.

Please find attached the comments or updates to your letter prepared by the City and R & M. Your thorough review has been much appreciated, we look forward to discussing these comments with you and together work towards completion of the final documents.

The City and R&M are available to discuss any of the responses submitted and to address any other questions or comments, when would your schedule allow for a joint teleconference to occur? You may contact myself at 442-5202 or Jason at 442-5204 to further discuss the PER/ER and/or set up a time for a teleconference.

Sincerely,

Derek J. Martin, Capital Projects Manager

Attachments

City of Kotzebue
Preliminary Engineering Report / Environmental Report
Water Treatment Plant Improvement Study

Draft Final Responses to USDA Review Comments for Discussion
(20 April 2011)

The following review comments have been taken directly from the United States Department of Agriculture (USDA) letter to the City of Kotzebue dated March 31, 2011 (attached).

1. Copies of previous structural evaluations (referenced in PER on page 3) should be incorporated into the appendix.

   Response:
   - Will add the structural evaluation to the PER as an Appendix.

2. Under the Rural Alaska Village grant (RAVG) program, documentation of a dire sanitation condition must exist for grant funds to be used. If the City of Kotzebue intends to apply to RD for a construction project, a letter must be provided from a State agency that indicates one the following dire conditions exist. This definition is provided in RUS Instruction 1780 and is specific to the RAVG.
   a. Recurring instances of a waterborne communicable disease has been documented;
   or
   b. No community-wide water and sewer system exists and individual residents must haul water to or human waste from their homes and/or use pit privies.

   Response:
   - The City will work with ADEC to acquire the required documentation, which will be submitted with a construction Grant Application.

3. In a September 9, 2010 site visit to Kotzebue, RD indicated that rehabilitation of the existing water treatment plant must be examined as an alternative. · The evaluation of this alternative must be incorporated into all required sections, including life cycle cost analysis, of the report. If the existing facility is not adequate, specific references to documentation must be provided to indicate the reason and life expectancy of the existing plant.

Response:

- Rehabilitation of the existing water treatment plant would not be practical or cost-effective, as it would require the construction of a temporary plant, while the existing plant was being reconstructed; then dismantling the temporary plant.
- Also, the treat process is not adequate. Reasons for inadequacy are provided in PER Section 3.0 Existing Water Treatment System, and Section 5.0 Need For Project.

4. "Do nothing" must be included as an alternative.

Response:

- "Do nothing" would result in continuing operation of a water plant that does not meet water quality standards. This is not an option required in the RUS 1780-2 PER Bulletin. The No Action alternative is included in the ER, as the No Action alternative is required under NEPA.

5. Annual short-lived asset reserve must be incorporated into the operation and maintenance costs.

Response:

- The City will provide the documentation to be included into the report. The City will utilize the 2009 PER Short-Lived Asset Reserve.

6. Pilot projects are not considered eligible for RD funds (reference on page 69). Proven technology must be utilized if grant funds will be requested from RD.

Response:

- Pilot testing is a part of the design effort. It is used to develop site specific treatment process performance criteria, especially where source water quality conditions vary seasonally. Pilot testing efforts are considered industry standard to safeguard the expenditure of public funds. Also, pilot testing to qualify the final level of treatment is typically required by the regulatory agencies.
- Note that all of the alternatives evaluated are proven technologies. If the word Pilot is confusing perhaps the wording should be changed.

7. The equipment listed on pages 16 and 17 should incorporate the dozer and asphalt repair equipment. City officials should review this list to ensure that all equipment available and conditions provided are accurate.

Response:

- The City has provided this updated list, which will be incorporated into the Final PER.

8. RD understands that the City of Kotzebue pays considerable fees for waste heat. A cost comparison should be completed to provide documentation on the amount of operation and maintenance savings resulting from the incorporation of waste heat.

   Response:
   - The City will coordinate with the USDA to determine what is required in the PER.
   - Current waste heat usage is for the water distribution system loops, and will not be required for any of the proposed treatment alternatives. The use of Waste Heat is preventive – it is utilized to avoid water main & water service line freeze-ups. The cost savings are difficult to measure, we do not know what would have froze up if the Add-Heat was not turned on and therefore cannot measure the O&M savings.

9. Does the City of Kotzebue own all the land for the proposed facility? Are some of the facilities encroaching on school district property?

   Response:
   - Yes – the City owns the property required for the proposed new water treatment facility. Text will be revised based on city's statements.

10. Total cost estimates must include all project costs. Kotzebue administration fees, resident inspection fees, engineering construction management fees, and demolition fees must be incorporated for all alternatives examined.

    Response:
    - These items will be included.

11. The recommended building size should be addressed for each individual alternative. Different treatment systems do not require the same building area and may result in lower construction costs.

    Response:

    - The PER provides for a standard building size (7,200 SF) for all alternatives. The building layout must take into account other issues than equipment footprint only (e.g. work space around the equipment, chemical storage, etc.). At the planning stage the small differences in required building area for each water treatment process alternative do not significantly affect the order-of-magnitude construction costs.

12. Present Worth (life cycle) cost analysis (an engineering economics technique to evaluate present and future costs for comparison of alternatives) should be completed to compare

the feasible alternatives. All of the items from the cost estimate should be included in the analysis. The '"real" federal discount rate from Appendix C of OMB Circular A-94 should be used for determining the present worth of the uniform series of O & M values (in today's dollars) and the salvage value. A 20-year real interest rate may be interpolated as the average of the 10-year and 30-year rates on the web page at: www.whitehouse.gov/omb/circulars/a094/a94_appx-c.html. If the lowest life cycle alternative is not selected, supporting documentation supporting the selection must be provided.

Response:

- Using an alternative interest rate will not change the outcome of the selection of a preferred treatment alternative. The report will be revised to reflect use of the prescribed discount rate as required by USDA.
- Using a 30 year period will not change the outcome of the selection of a preferred treatment alternative. The report will be revised to reflect use of a 30 year period as required by USDA.

13. If adequately maintained, the useful life of a water treatment plant should be at least 30 years. The utilization of 30 years should be incorporated into the life cycle cost analysis.

Response:

- Will use the 30 year period.

14. If the range of present worth values is small, then non-monetary factors should be considered in determining which alternative should be selected. Indication of any of those factors must be incorporated into the report.

Response:

- Non-monetary factors, as well as monetary factors, have been considered in the PER. See Section 6.6.

15. Page 25 of the report indicated maximum of 432,000 gpd. Page 48 indicated maximum flow of 473,100 gpd for 2010. What is the maximum flow rate for the current facility?

Response:

- Page 25 is the current maximum plant-rated flow rate for the existing water treatment plant.
- Page 48 provides maximum flow rates based on selected design criteria in this report (i.e. a population of 3,154 and an average water consumption of 100 gallons per capita per day).

16. The PER indicates a phased approach for the construction of the water treatment plant. If

RD funds will requested, each proposed phase of the system must be operable upon completion. A statement indicating that each phase will be operable must be incorporated into the PER document. If the system will not be operational upon completion of each phases, a phased approach will not be considered for an RD application.

Response:

- Each phase will be operational as stated in the report

17. Page 16 of the environmental report indicates that upgrades may result in more efficient operation and the potential to lower rates for utility customers. Please be aware that if a grant application will be submitted to RD, the reduction in utility rates will not be considered. The intent of RD's grant program is not to subsidize community's utility rates.

Response:

- Intent of comment was not that this would be a subsidy; just that more efficient treatment could lower the cost of producing water, hence a lower cost to customers.
- Better wording in ER may be "Without a new plant costs will continue to rise because of the problems with existing plant."
- See also the Environmental Report, April 2009, regarding the expectation of savings if facilities are upgraded.

18. Per RUS Bulletin, financial analysis of the existing facility (revenues and expenditures) must be incorporated into the PER. Existing costs should be compared to alternatives.

Response:

- The City has provided the 2008-2010 Audits for this PER Report, which will be incorporated into the report in an appendix.

19. Income (rate structure) and expenses must be examined for each alternative.

Response:

- Requires clarification from USDA. Is income (e.g. per Bulletin 1780-2 c (1) Income) to be included in the present worth analysis? The expenses (electrical/fuel/chemical) are included for each alternative. All other factors are considered comparable).

It is recommended that the State of Alaska Village Safe Water program be provided copies of the reports for review and comment.

Response:

- Copies will be provided to the State of Alaska Village Safe Water Program. USDA comments, and responses to comments, will be included in the submittal.

END OF RESPONSES

DRAFT

City of Kotzebue
Preliminary Engineering Report / Environmental Report
Water Treatment Plant Improvement Study

Responses to USDA Review Comments
(Notes from telecom with City/USDA are included)
(11 May 2011)

The following review comments have been taken directly from the United States Department of Agriculture (USDA) letter to the City of Kotzebue dated March 31, 2011 (attached).

1. Copies of previous structural evaluations (referenced in PER on page 3) should be incorporated into the appendix.

   Response:
   - Will add the structural evaluation to the PER as an Appendix.

   Notes from telecom with City/USDA:
   - No change in response

2. Under the Rural Alaska Village grant (RAVG) program, documentation of a dire sanitation condition must exist for grant funds to be used. If the City of Kotzebue intends to apply to RD for a construction project, a letter must be provided from a State agency that indicates one the following dire conditions exist. This definition is provided in RUS Instruction 1780 and is specific to the RAVG.

   a. Recurring instances of a waterborne communicable disease has been documented;

   or

   b. No community-wide water and sewer system exists and individual residents must haul water to or human waste from their homes and/or use pit privies.

   Response:
   - The City will work with ADEC to acquire the required documentation, which will be submitted with a construction Grant Application.

   Notes from telecom with City/USDA:
   - USDA reiterated need for documentation.

3. ln a September 9, 2010 site visit to Kotzebue, RD indicated that rehabilitation of the existing water treatment plant must be examined as an alternative. · The evaluation of this alternative must be incorporated into all required sections, including life cycle cost analysis, of the report. If the existing facility is not adequate, specific references to documentation must be provided to indicate the reason and life expectancy of the existing plant.

   Response:
   - Rehabilitation of the existing water treatment plant would not be practical or cost-effective, as it would require the construction of a temporary plant, while the existing plant was being reconstructed; then dismantling the temporary plant.
   - Also, the treat process is not adequate. Reasons for inadequacy are provided in PER Section 3.0 Existing Water Treatment System, and Section 5.0 Need For Project.

   Notes from telecom with City/USDA:
   - USDA indicated that refurbishment of the existing water treatment facility must addressed as an alternative.

4. "Do nothing" must be included as an alternative.

   Response:
   - "Do nothing" would result in continuing operation of a water plant that does not meet water quality standards. This is not an option required in the RUS 1780-2 PER Bulletin. The No Action alternative is included in the ER, as the No Action alternative is required under NEPA.

   Notes from telecom with City/USDA:
   - The "Do Nothing" alternative will be included.

5. Annual short-lived asset reserve must be incorporated into the operation and maintenance costs.

   Response:
   - The City will provide the documentation to be included into the report. The City will utilize the 2009 PER Short-Lived Asset Reserve.

   Notes from telecom with City/USDA:
   - No change in response.

6. Pilot projects are not considered eligible for RD funds (reference on page 69). Proven technology must be utilized if grant funds will be requested from RD.

   Response:
   - Pilot testing is a part of the design effort. It is used to develop site specific treatment process performance criteria, especially where source water quality conditions vary seasonally. Pilot testing efforts are considered industry standard to safeguard the expenditure of public funds. Also, pilot testing to qualify the final level of treatment is typically required by the regulatory agencies.
   - Note that all of the alternatives evaluated are proven technologies. If the word Pilot is confusing perhaps the wording should be changed.

   Notes from telecom with City/USDA:
   - Pilot testing expected to be under $50,000.
   - The cost of pilot testing is included in the costs.

7. The equipment listed on pages 16 and 17 should incorporate the dozer and asphalt repair equipment. City officials should review this list to ensure that all equipment available and conditions provided are accurate.

   Response:
   - The City has provided this updated list, which will be incorporated into the Final PER.

   Notes from telecom with City/USDA:
   - No change in response.

8. RD understands that the City of Kotzebue pays considerable fees for waste heat. A cost comparison should be completed to provide documentation on the amount of operation and maintenance savings resulting from the incorporation of waste heat.

   Response:
   - The City will coordinate with the USDA to determine what is required in the PER.
   - Current waste heat usage is for the water distribution system loops, and will not be required for any of the proposed treatment alternatives. The use of Waste Heat is preventive – it is utilized to avoid water main & water service line freeze-ups. The cost savings are difficult to measure, we do not know what would have froze up if the Add-Heat was not turned on and therefore cannot measure the O&M savings.

   Notes from telecom with City/USDA:
   - The PER will identify that waste heat is not required for this project.

9. Does the City of Kotzebue own all the land for the proposed facility? Are some of the facilities encroaching on school district property?

Response:

- Yes – the City owns the property required for the proposed new water treatment facility. Text will be revised based on city's statements.

Notes from telecom with City/USDA:

- USDA asked if there were any issues with the school district. The City sent a scoping letter to the school district and is not aware of any concerns. The city indicated that no additional land purchase in anticipated.

10. Total cost estimates must include all project costs. Kotzebue administration fees, resident inspection fees, engineering construction management fees, and demolition fees must be incorporated for all alternatives examined.

Response:

- These items will be included.

Notes from telecom with City/USDA:

- No change in response.

11. The recommended building size should be addressed for each individual alternative. Different treatment systems do not require the same building area and may result in lower construction costs.

Response:

- The PER provides for a standard building size (7,200 SF) for all alternatives. The building layout must take into account other issues than equipment footprint only (e.g. work space around the equipment, chemical storage, etc.). At the planning stage the small differences in required building area for each water treatment process alternative do not significantly affect the order-of-magnitude construction costs.

Notes from telecom with City/USDA:

- As requested by USDA, the building size for each alternative will be varied slightly to allow for differences in the process footprint, and building size will be included as a variable in the Present Worth analysis.

12. Present Worth (life cycle) cost analysis (an engineering economics technique to evaluate present and future costs for comparison of alternatives) should be completed to compare the feasible alternatives. All of the items from the cost estimate should be included in the analysis. The '"real" federal discount rate from Appendix C of OMB Circular A-94 should be used for determining the present worth of the uniform series of O & M values (in today's dollars) and the salvage value. A 20-year real interest rate may be interpolated as the average of the 10-year and 30-year rates on the web page at: www.whitehouse.gov/omb/circulars/a094/a94_appx-c.html. If the lowest life cycle alternative is not selected, supporting documentation supporting the selection must be provided.

Response:

- Using an alternative interest rate will not change the outcome of the selection of a preferred treatment alternative. The report will be revised to reflect use of the prescribed discount rate as required by USDA.
- Using a 30 year period will not change the outcome of the selection of a preferred treatment alternative. The report will be revised to reflect use of a 30 year period as required by USDA.

Notes from telecom with City/USDA:

- A 30 year period and associated "real" federal discount rate, per the circular, will be used. The circular will be referenced in the PER.
- Only variable costs are included in the Present Worth cost analysis
- Maintenance costs have been updated and Present Worth costs revised, since the Draft Final report was submitted.

13. If adequately maintained, the useful life of a water treatment plant should be at least 30 years. The utilization of 30 years should be incorporated into the life cycle cost analysis.

Response:

- Will use the 30 year period.

Notes from telecom with City/USDA:

- No change in response.

14. If the range of present worth values is small, then non-monetary factors should be considered in determining which alternative should be selected. Indication of any of those factors must be incorporated into the report.

Response:

- Non-monetary factors, as well as monetary factors, have been considered in the PER. See Section 6.6.

Notes from telecom with City/USDA:

- No change to response.

15. Page 25 of the report indicated maximum of 432,000 gpd. Page 48 indicated maximum flow of 473,100 gpd for 2010. What is the maximum flow rate for the current facility?

Response:

- Page 25 is the current maximum plant-rated flow rate for the existing water treatment plant.
- Page 48 provides maximum flow rates based on selected design criteria in this report (i.e. a population of 3,154 and an average water consumption of 100 gallons per capita per day).

Notes from telecom with City/USDA:

- No change to response.

16. The PER indicates a phased approach for the construction of the water treatment plant. If RD funds will requested, each proposed phase of the system must be operable upon completion. A statement indicating that each phase will be operable must be incorporated into the PER document. If the system will not be operational upon completion of each phases, a phased approach will not be considered for an RD application.

Response:

- Each phase will be operational as stated in the report

Notes from telecom with City/USDA:

- No change to response.

17. Page 16 of the environmental report indicates that upgrades may result in more efficient operation and the potential to lower rates for utility customers. Please be aware that if a grant application will be submitted to RD, the reduction in utility rates will not be considered. The intent of RD's grant program is not to subsidize community's utility rates.

Response:

- Intent of comment was not that this would be a subsidy; just that more efficient treatment could lower the cost of producing water, hence a lower cost to customers.
- Better wording in ER may be "Without a new plant costs will continue to rise because of the problems with existing plant."
- See also the Environmental Report, April 2009, regarding the expectation of savings if facilities are upgraded.

Notes from telecom with City/USDA:

- Wording in the ER will be revised to make it clear that funding will not be used to subsidize costs to utility customers.

18. Per RUS Bulletin, financial analysis of the existing facility (revenues and expenditures) must be incorporated into the PER. Existing costs should be compared to alternatives.

Response:

- The City has provided the 2008-2010 Audits for this PER Report, which will be incorporated into the report in an appendix.

Notes from telecom with City/USDA:

- No change in response.

19. Income (rate structure) and expenses must be examined for each alternative.

Response:

- Requires clarification from USDA. Is income (e.g. per Bulletin 1780-2 c (1) Income) to be included in the present worth analysis? The expenses (electrical/fuel/chemical) are included for each alternative. All other factors are considered comparable).

Notes from telecom with City/USDA:

- Income (rate structure) was included in the audits provided by the City (see Item 18.), and will be included in the PER.

It is recommended that the State of Alaska Village Safe Water program be provided copies of the reports for review and comment.

Response:

- Copies will be provided to the State of Alaska Village Safe Water Program. USDA comments, and responses to comments, will be included in the submittal.

Notes from telecom with City/USDA:

- The City will forward a copy of the final report, along with USDA review comments / responses, to Village Safe Water.

END OF RESPONSES

APPENDIX C

COST ESTIMATES

CAPITAL COSTS

Appendix C

Cost Estimate – Capital Costs

Capital costs for the water treatment plant and the various water treatment options are developed in this section. Capital costs for equipment were obtained from various manufacturers based on their proposal to meet the water quality objectives identified in a Request for Information summary for the city.

Capital costs include the cost allocations for support equipment, and a miscellaneous equipment allowance of 5%, a metals (piping) allowance of 2%, and shipping allowance of 6%, and a labor allowance of 5% to set-up the package treatment equipment. In addition, there is a 4.5% allocation for instrumentation and SCADA control equipment and 50% (of the instrumentation and SCADA control equipment) allocation for installation of this equipment. There is an allocation of 12.5% for mechanical and 25% (of the mechanical material costs) for installation, and 4.5% for electrical equipment and 50% (of the electrical material costs) for installation labor. This total is considered the treatment process equipment installation cost. In order to arrive at the total construction cost, an allocation of 10% is used for the general requirements contained in a typical construction contract, 25% for contractor overhead and profit, and 25% contingency. 10% of the total is estimated for engineering design and permitting and 15% for construction management and engineering services during construction.

A detailed estimate of the construction costs for a new water treatment structure was not made, but based on a unit cost of $300 a square foot for an insulated metal building, and $176 per square foot for an insulated gravel fill with thermosyphons foundation system. It is assumed that the building would have a conventional foundation wall and slab-on-grade floor. An estimate of yard piping is also included, along with the same percentage cost allocation for instrumentation, mechanical (HVAC), and electrical, and the same percentage allocation for general requirements, overhead and profit, contingency, and engineering as previously provided for the water treatment equipment installation. The building size is assumed to be sized to house the equipment and support components necessary to fully function as a water plant. Chemical storage would be installed in the second floor or mezzanine area, along with HVAC equipment. Demolition/moving of the existing Quonset are associated out-buildings and surge tank are also included and costs assumed a square footage basis. The capital costs do not include the pumping and distribution systems, which would be located in the same building structure as the treatment equipment. The cost estimate also does not include a cost estimate for demolition and closure of the existing water treatment plant, which the city has indicated would be addressed with a separate grant and evaluation. It is assumed that a supplemental study and grant would be obtained at a later date to evaluate closure plan, pumping and pressure systems, and other components not specifically related to the water treatment process, although construction could occur concurrent with the water treatment construction.

Kotzebue Water Treatment System
Predesign Estimate of Project Costs - UNIT COSTS

WTP Building Structure	Conventional	Convent-GAC	DAF-Nano	Immersed Membrane	conv-micro	MF-NF
Size:	60X120	60X120	60X120	45X120	60X120	45X120
	7200	7200	7200	5400	7200	5400
Unit cost						
Bldg and interior work	$ 300	per sf	Basis - RM			
Foundation-gravel with thermosyphons	$ 176	per sf				
Furnish and install fill	$ 80	cubic yard				
Furnish and install sewer pipe and manholes	$ 385	lf				
Furnish and install electrical and telephone utilities	$ 60	lf				
Furnish and install water pipe	$ 205	lf				
Demolition	$ 100	sf				
Furnish and install chain link fence	$ 60	lf				
Treatment processes - from mft						
Conventional-Enhanced Coagulation	$ 964,000	$ 370,000	Tonka Equipment-TMG-Dean Brown		Robts filter	
Conventional - Enhanced - GAC	$ 370,000		Roberts Filter			
DAF-Conv-Nano	$ 932,000		Ric Tower - TEC- Andy Stefano- CORIX			
Immersed membrane	$ 1,496,000		Apsco- Dale McBain - GE Technologies			
Ultrafiltration	$ 475,000		Ric Tower-Pall Corp			
MF_NF	$ 900,000		Pall - for Seldovia - adj based on twice the size			
Assumptions						
Overhead and profit	25%					
contingency	25%					
Bonding	1%					
Design and construction management	25%					
Administration	2%					
Permitting and legal	1%					
Surveyng and geotechnical	2%					

FILE: costestimate						
PREPARED BY: dhs						
WTP BUILDING AND SITEWORK						
==========	=======	=====	=========	==========		
Kotzebue Water Treatment System						
ROUGH ORDER OF MAGNITUDE COST OPINION						
(ACCURACY RANGE: +30%/-15%)						
ITEM BREAKDOWN - OVERHEAD AND PROFIT EXCLUDED						
==========	=======	=====	=========	==========		==========
ITEM	QUANT	UNIT	$/UNIT	TOTAL		NOTES/REFERENCE
DESCRIPTION				COST		
==========	=======	=====	=========	==========		==========
==========	=======	=====	=========	==========		
WTP BUILDING AND SITEWORK						
---	---	---	---	---		
BUILDING AND SITEWORK						Inclds: Intr Elec/HVAC/Plumbing
Bldg and interior work	7200	SF	$ 300	$2,160,000		Estimate per square foot construction cost
Foundation-gravel with thermosyphons	7200	SF	$ 176	$1,267,200		assumes pre-mft metal bldg structure, thermosyphons, and concrete floor
Furnish and install fill	960	CY	$ 80	$76,800		excavation and fill with gravel and insulation
Furnish and install sewer pipe and manholes	220	LF	$ 385	$84,700		
Furnish and install electrical and telephone utilities	900	LF	$ 60	$54,000		
Furnish and install water pipe	5660	LF	$ 205	$1,160,300		
Demolition	1400	SF	$ 100	$140,000		
Furnish and install chain link fence	380	LF	$ 60	$22,800		
---	---	---	---	---		
SUBTOTAL				$4,965,800		
INSTRUMENTATION:						
Instrumentation Allowance	1%		$2,160,000	$21,600		
Installation Labor	50%		$21,600	$10,800		
---	---	---	---	---		
SUBTOTAL				$32,400		
MECHANICAL:						
Mechanical Allowance	2%		$3,427,200	$68,544		
Installation Labor	50%		$68,544	$34,272		
---	---	---	---	---		
SUBTOTAL				$102,816		
ELECTRICAL:						
Electrical Allowance	2%		$2,160,000	$43,200		
Installation Labor	50%		$43,200	$21,600		
---	---	---	---	---		
SUBTOTAL				$64,800		
==========	=======	=====	=========	==========		
TOTAL				$5,165,816		
==========	=======	=====	=========	==========		
==========	=======	=====	=========	==========		

FILE: costestimate												
PREPARED BY: dhs												
WTP BUILDING AND SITEWORK												
==========	==========											
Kotzebue Water Treatment System												
ROUGH ORDER OF MAGNITUDE COST OPINION												
(ACCURACY RANGE: +30%/-15%)												
SUMMARY OF COSTS												
==========	==========	==========	==========	==========	==========	==========	=========	==========	==========	==========	==========	=========
ITEM	01	11	13	14	15	16	SUBTOTAL	CONTINGENCY	SUBTOTAL	CONTRACTOR	TOTAL	PERCENT
	GEN REQMNTS	Bldg	SPECIAL	CONVEYING	MECHANICAL	ELECTRICAL				O & P	COST	OF
	10%		CONST.	SYSTEMS				25%		25%		TOTAL
==========	==========	==========	==========	==========	==========	==========	=========	==========	==========	==========	==========	=========
WTP BUILDING AND SITEWORK	$496,580	$4,965,800	$32,400		$102,816	$64,800	$5,662,396	$1,415,599	$7,077,995	$1,769,499	$8,847,494	100.00%
==========	==========	==========	==========	==========	==========	==========	=========	==========	==========	==========	==========	=========
TOTAL CONSTRUCTION COST	$496,580	$4,965,800	$32,400	$0	$102,816	$64,800	$5,662,396	$1,415,599	$7,077,995	$1,769,499	$8,847,494	100.00%
==========	==========	==========	==========	==========	==========	==========	=========	==========	==========	==========	==========	=========
PERCENT OF TOTAL CONSTRUCTION COST	5.61%	56.13%	0.37%	0.00%	1.16%	0.73%	64.00%		80.00%		100.00%	
==========	==========	==========	==========	==========	==========	==========	=========	==========	==========	==========	==========	=========
Bonding										1%	$70,780	
Design and construction management										25.00%	$1,769,499	
Administration										2%	$141,560	
Permitting and legal										1%	$70,780	
Surveyng and geotechnical										2%	$141,560	
==========	==========	==========	==========	==========	==========	==========	=========	==========	==========	==========	==========	=========
==========	==========	==========	==========	==========	==========	==========	=========	==========	==========	==========	==========	=========
TOTAL COST											**$10,970,892**	

FILE: costestimate						
PREPARED BY: dhs						
WTP BUILDING AND SITEWORK						
==========	=======	=====	=========	==========		
Kotzebue Water Treatment System						
ROUGH ORDER OF MAGNITUDE COST OPINION						
(ACCURACY RANGE: +30%/-15%)						
ITEM BREAKDOWN - OVERHEAD AND PROFIT EXCLUDED						
==========	=======	=====	=========	==========		==========
ITEM	QUANT	UNIT	$/UNIT	TOTAL		NOTES/REFERENCE
DESCRIPTION				COST		
==========	=======	=====	=========	==========		==========
==========	=======	=====	=========	==========		
WTP BUILDING AND SITEWORK						
---	---	---	---	---		
						Inclds: Intr Elec/HVAC/Plumbing
BUILDING AND SITEWORK						Estimate per square foot construction cost
Bldg and interior work	5400	SF	$ 300	$1,620,000		assumes pre-mft metal bldg structure, thermosyphons, and concrete floor
Foundation-gravel with thermosyphons	5400	SF	$ 176	$950,400		excavation and fill with gravel and insulation
Furnish and install fill	960	CY	$ 80	$76,800		
Furnish and install sewer pipe and manholes	220	LF	$ 385	$84,700		
Furnish and install electrical and telephone utilities	900	LF	$ 60	$54,000		
Furnish and install water pipe	5660	LF	$ 205	$1,160,300		
Demolition	1400	SF	$ 100	$140,000		
Furnish and install chain link fence	380	LF	$ 60	$22,800		
---	---	---	---	---		
SUBTOTAL				$4,109,000		
INSTRUMENTATION:						
Instrumentation Allowance	1%		$1,620,000	$16,200		
Installation Labor	50%		$16,200	$8,100		
---	---	---	---	---		
SUBTOTAL				$24,300		
MECHANICAL:						
Mechanical Allowance	2%		$1,620,000	$32,400		
Installation Labor	50%		$32,400	$16,200		
---	---	---	---	---		
SUBTOTAL				$48,600		
ELECTRICAL:						
Electrical Allowance	2%		$0	$0		
Installation Labor	50%		$0	$0		
---	---	---	---	---		
SUBTOTAL				$0		
==========	=======	=====	=========	==========		
TOTAL				$4,181,900		
==========	=======	=====	=========	==========		

FILE: costestimate												
PREPARED BY: dhs												
WTP BUILDING AND SITEWORK												
==========	==========											
Kotzebue Water Treatment System												
ROUGH ORDER OF MAGNITUDE COST OPINION												
(ACCURACY RANGE: +30%/-15%)												
SUMMARY OF COSTS												
==========	==========	==========	==========	==========	==========	==========	=========	==========	==========	==========	==========	=========
ITEM	01	11	13	14	15	16	SUBTOTAL	CONTINGENCY	SUBTOTAL	CONTRACTOR	TOTAL	PERCENT
	GEN REQMNTS	Bldg	SPECIAL	CONVEYING	MECHANICAL	ELECTRICAL				O & P	COST	OF
	10%		CONST.	SYSTEMS				25%		25%		TOTAL
==========	==========	==========	==========	==========	==========	==========	=========	==========	==========	==========	==========	=========
WTP BUILDING AND SITEWORK	$410,900	$4,109,000	$24,300		$48,600	$0	$4,592,800	$1,148,200	$5,741,000	$1,435,250	$7,176,250	100.00%
==========	==========	==========	==========	==========	==========	==========	=========	==========	==========	==========	==========	=========
TOTAL CONSTRUCTION COST	$410,900	$4,109,000	$24,300	$0	$48,600	$0	$4,592,800	$1,148,200	$5,741,000	$1,435,250	$7,176,250	100.00%
==========	==========	==========	==========	==========	==========	==========	=========	==========	==========	==========	==========	=========
PERCENT OF TOTAL CONSTRUCTION COST	5.73%	57.26%	0.34%	0.00%	0.68%	0.00%	64.00%		80.00%		100.00%	
==========	==========	==========	==========	==========	==========	==========	=========	==========	==========	==========	==========	=========
Bonding										1%	$57,410	
Design and construction management										25.00%	$1,435,250	
Administration										2%	$114,820	
Permitting and legal										1%	$57,410	
Surveyng and geotechnical										2%	$114,820	
==========	==========	==========	==========	==========	==========	==========	=========	==========	==========	==========	==========	=========
==========	==========	==========	==========	==========	==========	==========	=========	==========	==========	==========	==========	=========
TOTAL COST											**$8,898,550**	

FILE: Capital costs - only						
PREPARED BY: dhs						
GRAVITY - CONVENTIONAL FILTER PACKAGE PLANT (Tonka)						
==========	=======	=====	==========	==========		
Kotzebue Water Treatment System						
ROUGH ORDER OF MAGNITUDE COST OPINION						
(ACCURACY RANGE: +30%/-15%)						
ITEM BREAKDOWN - OVERHEAD AND PROFIT EXCLUDED						
==========	=======	=====	==========	==========		==========
ITEM	QUANT	UNIT	$/UNIT	TOTAL		NOTES/REFERENCE
DESCRIPTION				COST		
==========	=======	=====	==========	==========		==========
==========	=======	=====	==========	==========		
GRAVITY - CONVENTIONAL FILTER PACKAGE PLANT 500 GPM						
----------	----------	----------	----------	----------		
EQUIPMENT:						
Streaming Current Detector	1	EA	$10,000	$10,000		Chemtrac
Package Conventional Filter w/Accessories	1	LS	$964,000	$964,000		Tonka Equipment
Chemical Feed Pump & Appurtenances	1	EA	$4,000	$4,000		1 corrosion control
Static Mixer	2	EA	$400	$800		Komax
Flow Meter	1	EA	$10,000	$10,000		
Turbidimeter	0	EA	$3,000	$0		Raw & Eff Turb Include inTonka supply
Misc Equipment Allowance	5.00%	of	$988,800	$49,440		
Misc Metals Allowance	2.00%	of	$1,038,240	$20,765		
Shipping/Crating Allowance	6.00%	of	$1,059,005	$63,540		
Installation Labor to Set Equipment	5.00%	of	$1,059,005	$52,950		
----------	----------	----------	----------	----------		
SUBTOTAL				$1,175,495		
INSTRUMENTATION:						
Instrumentation Allowance	4.0%		$1,038,240	$41,530		
Installation Labor	50%		$41,530	$20,765		
----------	----------	----------	----------	----------		
SUBTOTAL			$49,440	$62,294		
MECHANICAL:						
Mechanical Allowance	11.5%		$1,059,005	$121,786		
Installation Labor	25%		$121,786	$30,446		
----------	----------	----------	----------	----------		
SUBTOTAL				$152,232		
ELECTRICAL:						
Electrical Allowance	4.0%		$1,038,240	$41,530		
Installation Labor	50%		$41,530	$20,765		
----------	----------	----------	----------	----------		
SUBTOTAL				$62,294		
==========	=======	=====	==========	==========		
TOTAL				$1,452,316		
==========	=======	=====	==========	==========		

FILE: costestimate
PREPARED BY: woolard

GRAVITY - CONVENTIONAL FILTER PACKAGE PLANT (Tonka)

Kotzebue Water Treatment System
ROUGH ORDER OF MAGNITUDE COST OPINION
(ACCURACY RANGE: +30%/-15%]

SUMMARY OF COSTS

ITEM	01 GEN REQMNTS 10%	11 EQUIPMENT	13 SPECIAL CONST.	14 CONVEYING SYSTEMS	15 MECHANICAL	16 ELECTRICAL	SUBTOTAL	CONTINGENCY 25%	SUBTOTAL	CONTRACTOR O & P 25%	TOTAL COST	PERCENT OF TOTAL
GRAVITY - CONVENTIONAL FILTER PACKAGE PLANT 500 GPM	$145,232	$1,175,495	$62,294		$152,232	$62,294	$1,597,548	$399,387	$1,996,935	$499,234	$2,496,168	100.00%
TOTAL CONSTRUCTION COST	$145,232	$1,175,495	$62,294	$0	$152,232	$62,294	$1,597,548	$399,387	$1,996,935	$499,234	$2,496,168	100.00%
PERCENT OF TOTAL CONSTRUCTION COST	5.82%	47.09%	2.50%	0.00%	6.10%	2.50%	64.00%		80.00%		100.00%	
Bonding										1%	$19,969	
Design and construction management										25.00%	$499,234	
Administration										2%	$39,939	
TOTAL COST											**$3,035,341**	

FILE: Capital costs - only						
PREPARED BY: dhs						
GRAVITY - CONVENTIONAL FILTER with GAC PACKAGE PLANT (Roberts)						
==========	=======	=====	==========	==========		
Kotzebue Water Treatment System						
ROUGH ORDER OF MAGNITUDE COST OPINION						
(ACCURACY RANGE: +30%/-15%)						
ITEM BREAKDOWN - OVERHEAD AND PROFIT EXCLUDED						
==========	=======	=====	==========	==========		==========
ITEM	QUANT	UNIT	$/UNIT	TOTAL		NOTES/REFERENCE
DESCRIPTION				COST		
==========	=======	=====	==========	==========		==========
==========	=======	=====	==========	==========		
GRAVITY - CONVENTIONAL FILTER with GAC PACKAGE PLANT 500 GPM						
----------	----------	---------	----------	----------		
EQUIPMENT:						
Streaming Current Detector	1	EA	$10,000	$10,000		Chemtrac
Package Conventional Filter w/Accessories	1	LS	$370,000	$370,000		Roberts Filters
Chemical Feed Pump & Appurtenances	1	EA	$4,000	$4,000		1 corrosion control
Static Mixer	2	EA	$400	$800		Komax
Flow Meter	1	EA	$10,000	$10,000		
Turbidimeter	0	EA	$3,000	$0		Raw & Eff Turb Include inRoberts supply
Misc Equipment Allowance	5.00%	of	$394,800	$19,740		
Misc Metals Allowance	2.00%	of	$414,540	$8,291		
Shipping/Crating Allowance	6.00%	of	$422,831	$25,370		
Installation Labor to Set Equipment	5.00%	of	$422,831	$21,142		
----------	----------	---------	----------	----------		
SUBTOTAL				$469,342		
INSTRUMENTATION:						
Instrumentation Allowance	10.0%		$414,540	$41,454		
Installation Labor	50%		$41,454	$20,727		
----------	----------	---------	----------	----------		
SUBTOTAL			$19,740	$62,181		
MECHANICAL:						
Mechanical Allowance	26.0%		$422,831	$109,936		
Installation Labor	25%		$109,936	$27,484		
----------	----------	---------	----------	----------		
SUBTOTAL				$137,420		
ELECTRICAL:						
Electrical Allowance	10.0%		$414,540	$41,454		
Installation Labor	50%		$41,454	$20,727		
----------	----------	---------	----------	----------		
SUBTOTAL				$62,181		
==========	=======	=====	==========	==========		
TOTAL				$731,124		
==========	=======	=====	==========	==========		
==========	=======	=====	==========	==========		

FILE: costestimate											
PREPARED BY: woolard											
GRAVITY - CONVENTIONAL FILTER with GAC PACKAGE PLANT (Roberts)											
==========	==========										
Kotzebue Water Treatment System											
ROUGH ORDER OF MAGNITUDE COST OPINION											
(ACCURACY RANGE: +30%/-15%)											
SUMMARY OF COSTS											
==========	==========	==========	==========	==========	==========	==========	=========	==========	==========		
ITEM	01	11	13	14	15	16	SUBTOTAL	CONTINGENCY	SUBTOTAL	CONTRACTOR	TOTAL
	GEN REQMNTS	EQUIPMENT	SPECIAL	CONVEYING	MECHANICAL	ELECTRICAL				O & P	COST
	10%		CONST.	SYSTEMS				25%		25%	
==========	==========	==========	==========	==========	==========	==========	=========	==========	==========		
GRAVITY - CONVENTIONAL FILTER with GAC PACKAGE PLANT 500	$73,112	$469,342	$62,181		$137,420	$62,181	$804,237	$201,059	$1,005,296	$251,324	$1,256,620
==========	==========	==========	==========	==========	==========	==========	=========	==========	==========		
TOTAL CONSTRUCTION COST	$73,112	$469,342	$62,181	$0	$137,420	$62,181	$804,237	$201,059	$1,005,296	$251,324	$1,256,620
==========	==========	==========	==========	==========	==========	==========	=========	==========	==========		
PERCENT OF TOTAL CONSTRUCTION COST	5.82%	37.35%	4.95%	0.00%	10.94%	4.95%	64.00%		80.00%		100.00%
==========	==========	==========	==========	==========	==========	==========	=========	==========	==========		
Bonding										1%	$10,053
Design and construction management										25.00%	$251,324
Administration										2%	$20,106
==========	==========	==========	==========	==========	==========	==========	=========	==========	==========	==========	==========
==========	==========	==========	==========	==========	==========	==========	=========	==========	==========	==========	==========
TOTAL COST											**$1,528,050**

FILE: costestimate						
PREPARED BY:dhs						
DAF - CONVENTIONAL - NANOFILTRATION (Corix)						
==========	=======	=====	=========	==========		
Kotzebue Water Treatment System						
ROUGH ORDER OF MAGNITUDE COST OPINION						
(ACCURACY RANGE: +30%/-15%)						
ITEM BREAKDOWN - OVERHEAD AND PROFIT EXCLUDED						
==========	=======	=====	=========	==========		==========
ITEM	QUANT	UNIT	$/UNIT	TOTAL		NOTES/REFERENCE
DESCRIPTION				COST		
==========	=======	=====	=========	==========		==========
==========	=======	=====	=========	==========		
DAF - CONVENTIONAL - NANOFILTRATION 500 GPM						
---	---	---	---	---		
EQUIPMENT:						
Streaming Current Detector	1	EA	$10,000	$10,000		Chemtrac
Package DAF_NF	1	LS	$932,000	$932,000		CORIX
Chemical Feed Pump & Appurtenances	4	EA	$4,000	$16,000		KMnO4/Chlorine/Fluoride/O-P
Misc Equipment Allowance	5.00%		$958,000	$47,900		
Misc Metals Allowance	2.00%		$1,005,900	$20,118		
Shipping/Crating Allowance	6.00%		$1,026,018	$61,561		
Installation Labor to Set Equipment	5.00%		$1,026,018	$51,301		
---	---	---	---	---		
SUBTOTAL				$1,138,880		
INSTRUMENTATION:						
Instrumentation Allowance	7%		$1,005,900	$70,413		
Installation Labor	50%		$70,413	$35,207		
---	---	---	---	---		
SUBTOTAL				$105,620		
MECHANICAL:						
Mechanical Allowance	20%		$1,026,018	$205,204		
Installation Labor	25%		$205,204	$51,301		
---	---	---	---	---		
SUBTOTAL				$256,505		
ELECTRICAL:						
Electrical Allowance	7%		$1,005,900	$70,413		
Installation Labor	50%		$70,413	$35,207		
---	---	---	---	---		
SUBTOTAL				$105,620		
==========	=======	=====	=========	==========		
TOTAL				$1,606,623		
==========	=======	=====	=========	==========		

FILE: costestimate											
PREPARED BY: woolard											
DAF - CONVENTIONAL - NANOFILTRATION (Corix)											
==========	==========										
Kotzebue Water Treatment System											
ROUGH ORDER OF MAGNITUDE COST OPINION											
(ACCURACY RANGE: +30%/-15%)											
SUMMARY OF COSTS											
==========	==========	==========	==========	==========	==========	==========	==========	==========	==========		
ITEM	01	11	13	14	15	16	SUBTOTAL	CONTINGENCY	SUBTOTAL	CONTRACTOR	TOTAL
	GEN REQMNTS	EQUIPMENT	SPECIAL	CONVEYING	MECHANICAL	ELECTRICAL				O & P	COST
	10%		CONST.	SYSTEMS				25%		25%	
==========	==========	==========	==========	==========	==========	==========	==========	==========	==========		
DAF - CONVENTIONAL - NANOFILTRATION 500 GPM	$160,662	$1,138,880	$105,620		$256,505	$105,620	$1,767,286	$441,821	$2,209,107	$552,277	$2,761,384
==========	==========	==========	==========	==========	==========	==========	==========	==========	==========		
TOTAL CONSTRUCTION COST	$160,662	$1,138,880	$105,620	$0	$256,505	$105,620	$1,767,286	$441,821	$2,209,107	$552,277	$2,761,384
==========	==========	==========	==========	==========	==========	==========	==========	==========	==========		
PERCENT OF TOTAL CONSTRUCTION COST	5.82%	41.24%	3.82%	0.00%	9.29%	3.82%	64.00%		80.00%		100.00%
==========	==========	==========	==========	==========	==========	==========	==========	==========	==========		
Bonding										1%	$22,091
Design and construction management										25.00%	$552,277
Administration										2%	$44,182
==========	==========	==========	==========	==========	==========	==========	==========	==========	==========	==========	==========
==========	==========	==========	==========	==========	==========	==========	==========	==========	==========	==========	==========
TOTAL COST											**$3,357,843**

FILE: costestimate						
PREPARED BY:dhs						
IMMERSED MEMBRANE (Ultrafiltration) (GE Zbox)						
==========	=======	=====	==========	==========		
Kotzebue Water Treatment System						
ROUGH ORDER OF MAGNITUDE COST OPINION						
(ACCURACY RANGE: +30%/-15%)						
ITEM BREAKDOWN - OVERHEAD AND PROFIT EXCLUDED						
==========	=======	=====	==========	==========		==========
ITEM	QUANT	UNIT	$/UNIT	TOTAL		NOTES/REFERENCE
DESCRIPTION				COST		
==========	=======	=====	==========	==========		==========
==========	=======	=====	==========	==========		
IMMERSED MEMBRANE (Ultrafiltraiton) 500 GPM						
---	---	---	---	---		
EQUIPMENT:						
Streaming Current Detector	1	EA	$10,000	$10,000		Chemtrac
Package Immersed Membrane	1	LS	$1,496,000	$1,496,000		GE Technologies
Chemical Feed Pump & Appurtenances	4	EA	$4,000	$16,000		KMnO4/Chlorine/Fluoride/O-P
Misc Equipment Allowance	5.00%		$1,522,000	$76,100		
Misc Metals Allowance	2.00%		$1,598,100	$31,962		
Shipping/Crating Allowance	6.00%		$1,630,062	$97,804		
Installation Labor to Set Equipment	5.00%		$1,630,062	$81,503		
---	---	---	---	---		
SUBTOTAL				$1,809,369		
INSTRUMENTATION:						
Instrumentation Allowance	2.5%		$1,598,100	$39,953		
Installation Labor	50%		$39,953	$19,976		
---	---	---	---	---		
SUBTOTAL				$59,929		
MECHANICAL:						
Mechanical Allowance	7.0%		$1,630,062	$114,104		
Installation Labor	25%		$114,104	$28,526		
---	---	---	---	---		
SUBTOTAL				$142,630		
ELECTRICAL:						
Electrical Allowance	2.5%		$1,598,100	$39,953		
Installation Labor	50%		$39,953	$19,976		
---	---	---	---	---		
SUBTOTAL				$59,929		
==========	=======	=====	==========	==========		
TOTAL				$2,071,857		
==========	=======	=====	==========	==========		
==========	=======	=====	==========	==========		

FILE: costestimate											
PREPARED BY: woolard											
IMMERSED MEMBRANE (Ultrafiltration) (GE Zbox)											
==========	==========										
Kotzebue Water Treatment System											
ROUGH ORDER OF MAGNITUDE COST OPINION											
(ACCURACY RANGE: +30%/-15%)											
SUMMARY OF COSTS											
==========	==========	==========	==========	==========	==========	==========	==========	==========	==========		
ITEM	01	11	13	14	15	16	SUBTOTAL	CONTINGENCY	SUBTOTAL	CONTRACTOR	TOTAL
	GEN REQMNTS	EQUIPMENT	SPECIAL	CONVEYING	MECHANICAL	ELECTRICAL				O & P	COST
	10%		CONST.	SYSTEMS				25%		25%	
==========	==========	==========	==========	==========	==========	==========	==========	==========	==========		
IMMERSED MEMBRANE (Ultrafiltraiton) 500 GPM	$207,186	$1,809,369	$59,929		$142,630	$59,929	$2,279,042	$569,761	$2,848,803	$712,201	$3,561,004
==========	==========	==========	==========	==========	==========	==========	==========	==========	==========		
TOTAL CONSTRUCTION COST	$207,186	$1,809,369	$59,929	$0	$142,630	$59,929	$2,279,042	$569,761	$2,848,803	$712,201	$3,561,004
==========	==========	==========	==========	==========	==========	==========	==========	==========	==========		
PERCENT OF TOTAL CONSTRUCTION COST	5.82%	50.81%	1.68%	0.00%	4.01%	1.68%	64.00%		80.00%		100.00%
==========	==========	==========	==========	==========	==========	==========	==========	==========	==========		
Bonding										1%	$28,488
Design and construction management										25.00%	$712,201
Administration										2%	$56,976
==========	==========	==========	==========	==========	==========	==========	==========	==========	==========	==========	==========
==========	==========	==========	==========	==========	==========	==========	==========	==========	==========	==========	==========
TOTAL COST											**$4,330,181**

FILE: costestimate						
PREPARED BY:dhs						
MICROFILTRATION (Pall)						
==========	=======	=====	=========	==========		
Kotzebue Water Treatment System						
ROUGH ORDER OF MAGNITUDE COST OPINION						
(ACCURACY RANGE: +30%/-15%)						
ITEM BREAKDOWN - OVERHEAD AND PROFIT EXCLUDED						
==========	=======	=====	=========	==========		==========
ITEM	QUANT	UNIT	$/UNIT	TOTAL		NOTES/REFERENCE
DESCRIPTION				COST		
==========	=======	=====	=========	==========		==========
==========	=======	=====	=========	==========		
Microfiltration 500 GPM						
---	---	---	---	---		
EQUIPMENT:						
Streaming Current Detector	1	EA	$10,000	$10,000		Chemtrac
Package Microfiltration	1	LS	$475,000	$475,000		Pall Corp
Chemical Feed Pump & Appurtenances	4	EA	$4,000	$16,000		KMnO4/Chlorine/Fluoride/O-P
Misc Equipment Allowance	5.00%		$501,000	$25,050		
Misc Metals Allowance	2.00%		$526,050	$10,521		
Shipping/Crating Allowance	6.00%		$536,571	$32,194		
Installation Labor to Set Equipment	5.00%		$536,571	$26,829		
---	---	---	---	---		
SUBTOTAL				$595,594		
INSTRUMENTATION:						
Instrumentation Allowance	7%		$526,050	$36,824		
Installation Labor	50%		$36,824	$18,412		
---	---	---	---	---		
SUBTOTAL				$55,235		
MECHANICAL:						
Mechanical Allowance	14%		$536,571	$75,120		
Installation Labor	25%		$75,120	$18,780		
---	---	---	---	---		
SUBTOTAL				$93,900		
ELECTRICAL:						
Electrical Allowance	7%		$526,050	$36,824		
Installation Labor	50%		$36,824	$18,412		
---	---	---	---	---		
SUBTOTAL				$55,235		
==========	=======	=====	=========	==========		
TOTAL				$799,964		
==========	=======	=====	=========	==========		

FILE: costestimate											
PREPARED BY: woolard											
MICROFILTRATION (Pall)											
==========	==========										
Kotzebue Water Treatment System											
ROUGH ORDER OF MAGNITUDE COST OPINION											
(ACCURACY RANGE: +30%/-15%)											
SUMMARY OF COSTS											
==========	==========	==========	==========	==========	==========	==========	==========	==========	==========		
ITEM	01	11	13	14	15	16	SUBTOTAL	CONTINGENCY	SUBTOTAL	CONTRACTOR	TOTAL
	GEN REQMNTS	EQUIPMENT	SPECIAL	CONVEYING	MECHANICAL	ELECTRICAL				O & P	COST
	10%		CONST.	SYSTEMS				25%		25%	
==========	==========	==========	==========	==========	==========	==========	==========	==========	==========		
Microfiltration 500 GPM	$79,996	$595,594	$55,235		$93,900	$55,235	$879,961	$219,990	$1,099,951	$274,988	$1,374,939
==========	==========	==========	==========	==========	==========	==========	==========	==========	==========		
TOTAL CONSTRUCTION COST	$79,996	$595,594	$55,235	$0	$93,900	$55,235	$879,961	$219,990	$1,099,951	$274,988	$1,374,939
==========	==========	==========	==========	==========	==========	==========	==========	==========	==========		
PERCENT OF TOTAL CONSTRUCTION COST	5.82%	43.32%	4.02%	0.00%	6.83%	4.02%	64.00%		80.00%		100.00%
==========	==========	==========	==========	==========	==========	==========	==========	==========	==========		
Bonding										1%	$11,000
Design and construction management										25.00%	$274,988
Administration										2%	$21,999
==========	==========	==========	==========	==========	==========	==========	==========	==========	==========	==========	==========
==========	==========	==========	==========	==========	==========	==========	==========	==========	==========	==========	==========
TOTAL COST											**$1,671,925**

FILE: costestimate						
PREPARED BY:dhs						
MICROFILTRATION / NANOFILTRATION						
==========	=======	=====	=========	==========		
Kotzebue Water Treatment System						
ROUGH ORDER OF MAGNITUDE COST OPINION						
(ACCURACY RANGE: +30%/-15%)						
ITEM BREAKDOWN - OVERHEAD AND PROFIT EXCLUDED						
==========	=======	=====	=========	==========		==========
ITEM	QUANT	UNIT	$/UNIT	TOTAL		NOTES/REFERENCE
DESCRIPTION				COST		
==========	=======	=====	=========	==========		==========
==========	=======	=====	=========	==========		
MICROFILTRATION / NANOFILTRATION 500 GPM						
---	---	---	---	---		
EQUIPMENT:						
Streaming Current Detector	1	EA	$10,000	$10,000		Chemtrac
Package MF/NF	1	LS	$900,000	$900,000		Pall Corp-adj from Seldovia proposal 10_1-
Chemical Feed Pump & Appurtenances	4	EA	$4,000	$16,000		KMnO4/Chlorine/Fluoride/O-P
Misc Equipment Allowance	5.00%		$926,000	$46,300		
Misc Metals Allowance	2.00%		$972,300	$19,446		
Shipping/Crating Allowance	6.00%		$991,746	$59,505		
Installation Labor to Set Equipment	5.00%		$991,746	$49,587		
---	---	---	---	---		
SUBTOTAL				$1,100,838		
INSTRUMENTATION:						
Instrumentation Allowance	2.5%		$972,300	$24,308		
Installation Labor	50.0%		$24,308	$12,154		
---	---	---	---	---		
SUBTOTAL				$36,461		
MECHANICAL:						
Mechanical Allowance	8.0%		$991,746	$79,340		
Installation Labor	25.0%		$79,340	$19,835		
---	---	---	---	---		
SUBTOTAL				$99,175		
ELECTRICAL:						
Electrical Allowance	2.5%		$972,300	$24,308		
Installation Labor	50.0%		$24,308	$12,154		
---	---	---	---	---		
SUBTOTAL				$36,461		
==========	=======	=====	=========	==========		
TOTAL				$1,272,935		
==========	=======	=====	=========	==========		
==========	=======	=====	=========	==========		

FILE: costestimate											
PREPARED BY: woolard											
MICROFILTRATION / NANOFILTRATION											
Kotzebue Water Treatment System											
ROUGH ORDER OF MAGNITUDE COST OPINION											
(ACCURACY RANGE: +30%/-15%)											
SUMMARY OF COSTS											
ITEM	01	11	13	14	15	16	SUBTOTAL	CONTINGENCY	SUBTOTAL	CONTRACTOR	TOTAL
	GEN REQMNTS	EQUIPMENT	SPECIAL	CONVEYING	MECHANICAL	ELECTRICAL				O & P	COST
	10%		CONST.	SYSTEMS				25%		25%	
MICROFILTRATION / NANOFILTRATION 500 GPM	$127,294	$1,100,838	$36,461		$99,175	$36,461	$1,400,229	$350,057	$1,750,286	$437,571	$2,187,857
TOTAL CONSTRUCTION COST	$127,294	$1,100,838	$36,461	$0	$99,175	$36,461	$1,400,229	$350,057	$1,750,286	$437,571	$2,187,857
PERCENT OF TOTAL CONSTRUCTION COST	5.82%	50.32%	1.67%	0.00%	4.53%	1.67%	64.00%		80.00%		100.00%
Bonding										1%	$17,503
Design and construction management										25.00%	$437,571
Administration										2%	$35,006
TOTAL COST											**$2,660,434**

Summary

Treatment Type		Manufacturers' Proposals	Estimated Equipment Construction Cost		Water Treatment Building	Total Project Cost WTP
GRAVITY - CONVENTIONAL FILTER PACKAGE PLANT (Tonka)	$	964,000	$3,035,341	$	10,970,892	$14,010,000
GRAVITY - CONVENTIONAL FILTER with GAC PACKAGE PLANT (R	$	370,000	$1,528,050	$	10,970,892	$12,500,000
DAF - CONVENTIONAL - NANOFILTRATION (Corix)	$	932,000	$3,357,843	$	10,970,892	$14,330,000
IMMERSED MEMBRANE (Ultrafiltration) (GE Zbox)	$	1,496,000	$4,330,181	$	8,898,550	$13,230,000
MICROFILTRATION (Pall)	$	475,000	$1,671,925	$	10,970,892	$12,640,000
MICROFILTRATION / NANOFILTRATION	$	900,000	$2,660,434	$	8,898,550	$11,560,000

Existing system

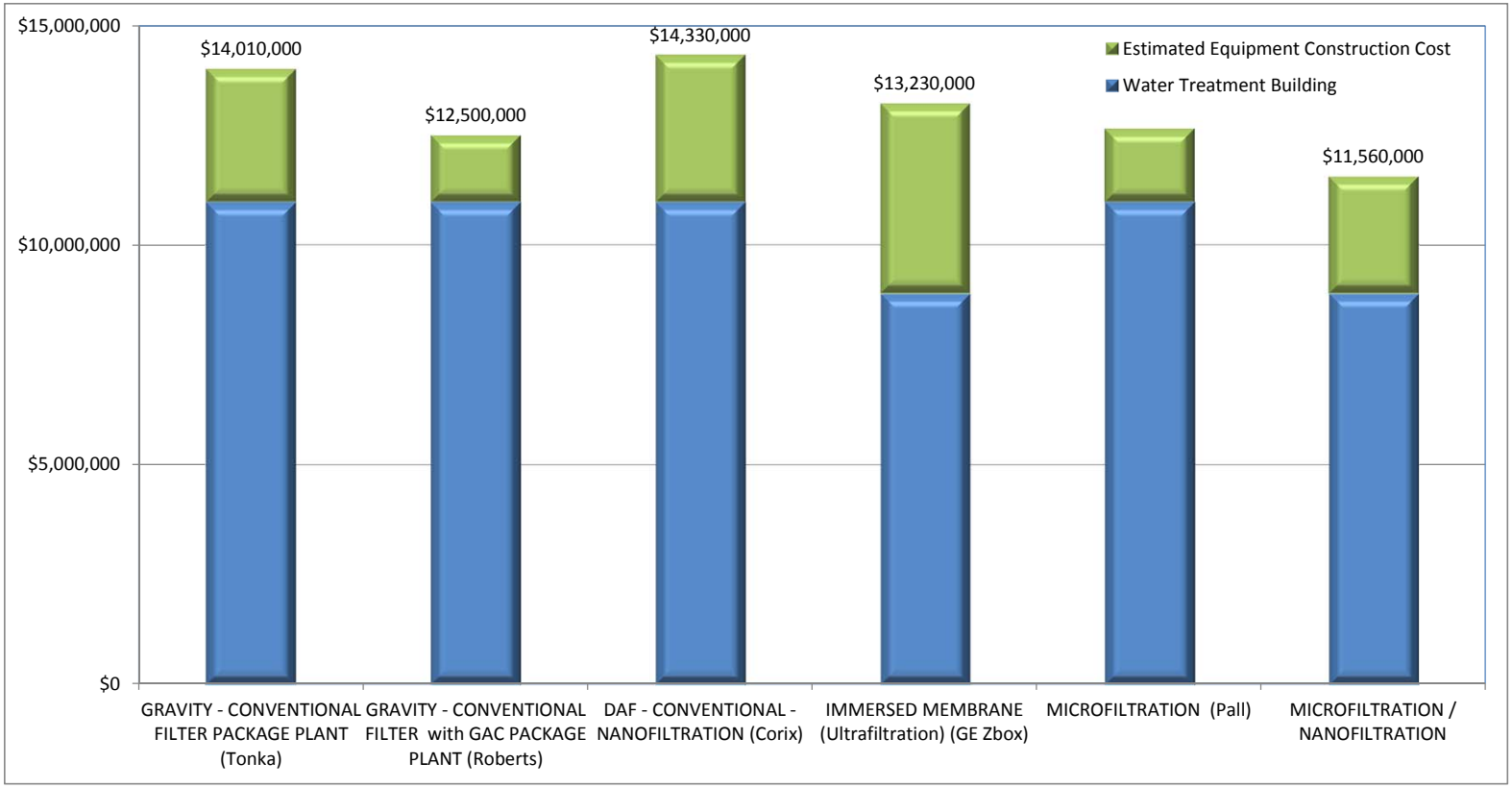

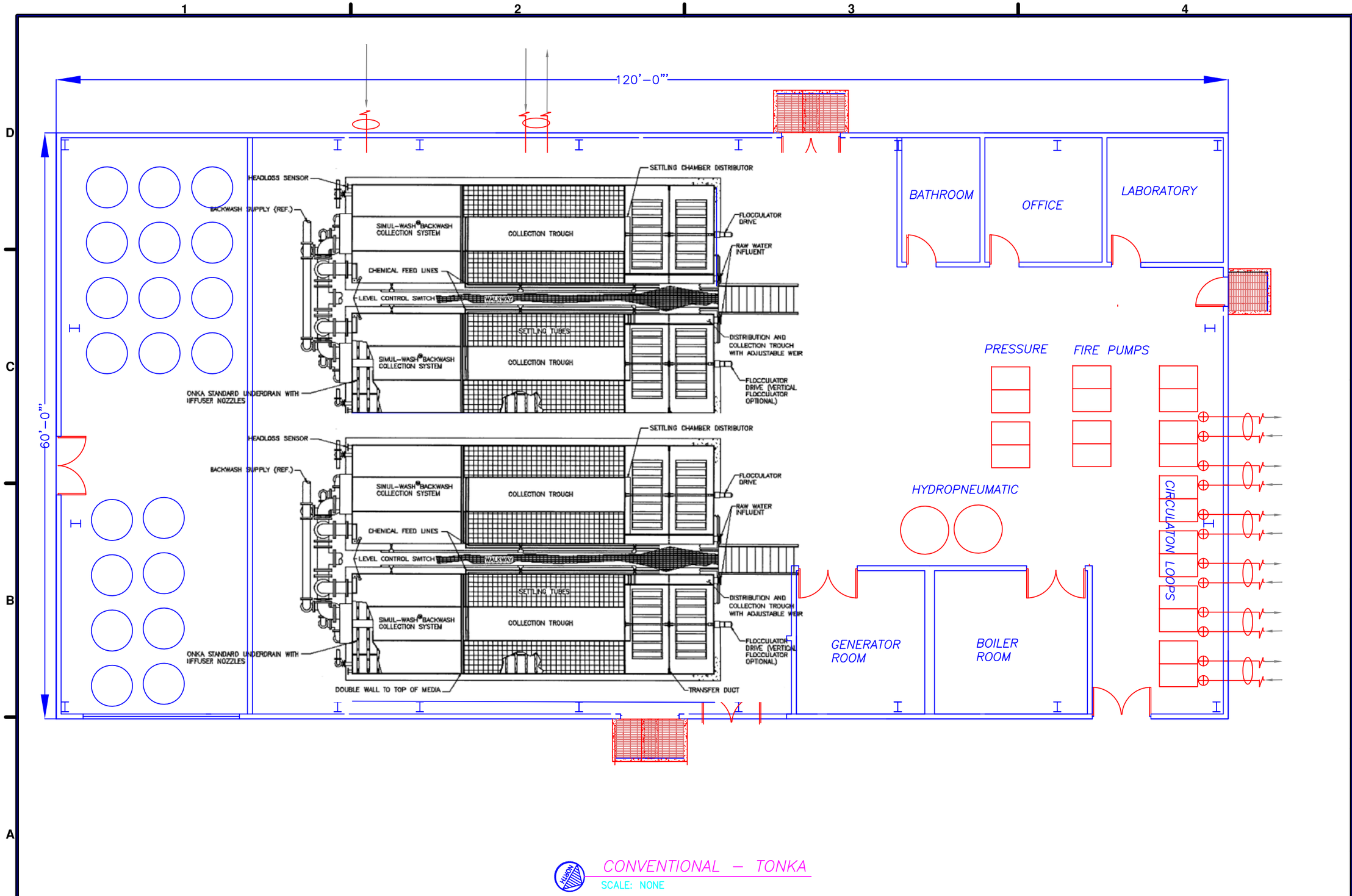

CONVENTIONAL – TONKA

SCALE: NONE

GV Jones & Associates, Inc.
WATER AND WASTEWATER PROCESS ENGINEERS
1200 E 76th AVE.
ANCHORAGE, ALASKA 99518

CITY OF KOTZEBUE
WATER TREATMENT PLANT
REPLACEMENT STUDY

APPENDIX
NEW WATER TREATMENT PLANT
SCHEMATIC

PAGE

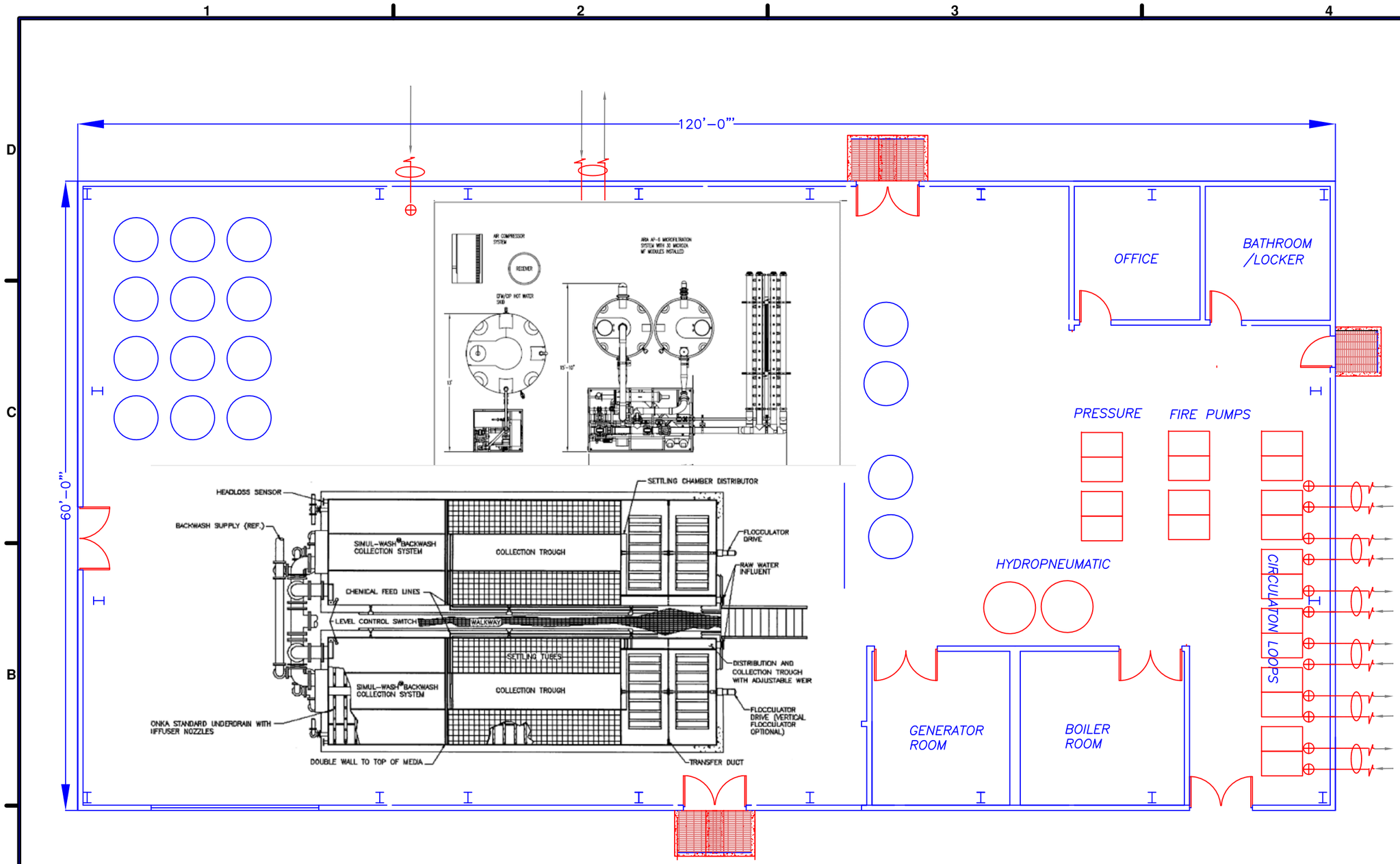

CONVENTIONAL MICROFILTRATION (PALL)

SCALE: NONE

GV Jones & Associates, Inc.
WATER AND WASTEWATER PROCESS ENGINEERS
1200 E 76th AVE.
ANCHORAGE, ALASKA 99518

CITY OF KOTZEBUE
WATER TREATMENT PLANT
REPLACEMENT STUDY

APPENDIX
NEW WATER TREATMENT PLANT
SCHEMATIC

PAGE

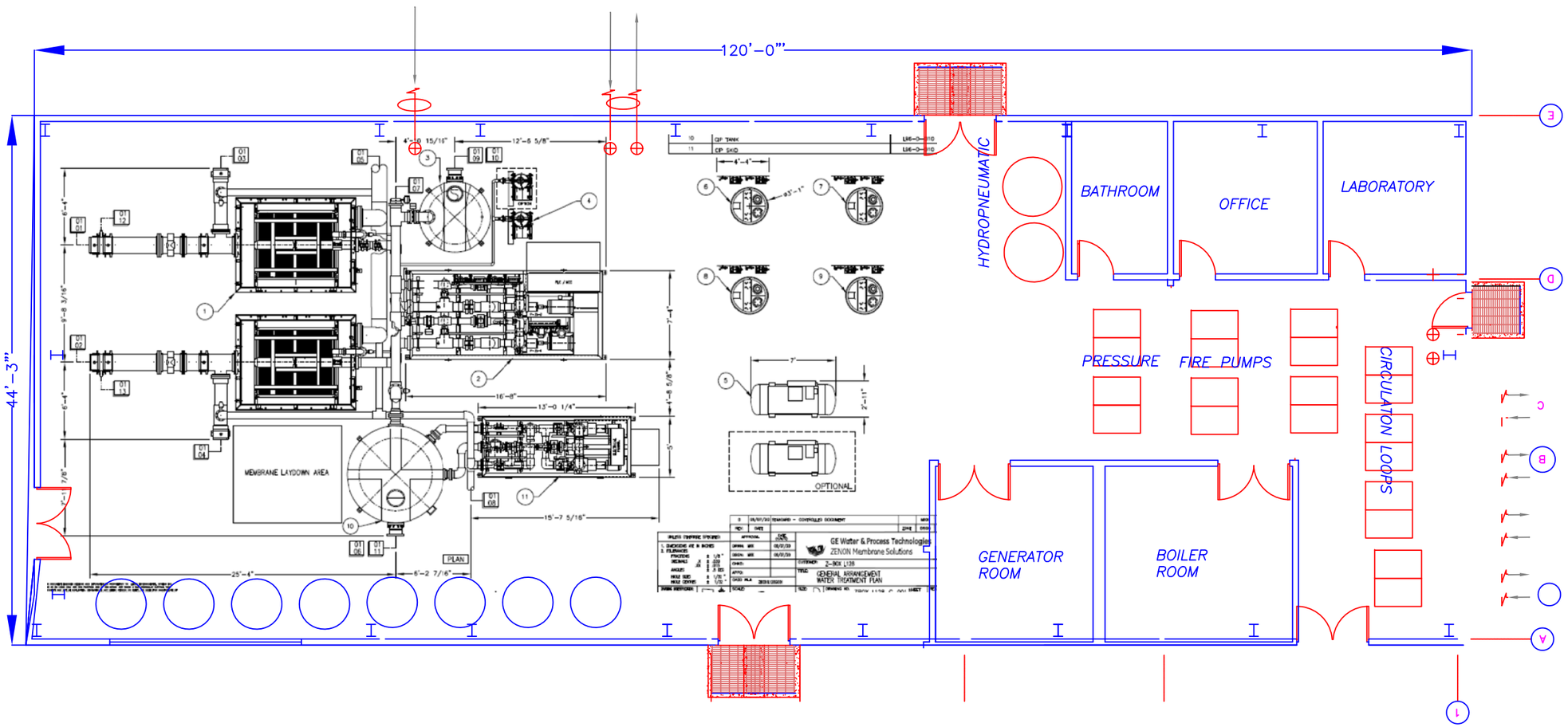

CONVENTIONAL – IMMERSED (ZENON)

SCALE: NONE

GV Jones & Associates, Inc.
WATER AND WASTEWATER PROCESS ENGINEERS
1200 E 76th AVE.
ANCHORAGE, ALASKA 99518

CITY OF KOTZEBUE
WATER TREATMENT PLANT
REPLACEMENT STUDY

APPENDIX
NEW WATER TREATMENT PLANT
SCHEMATIC

PAGE

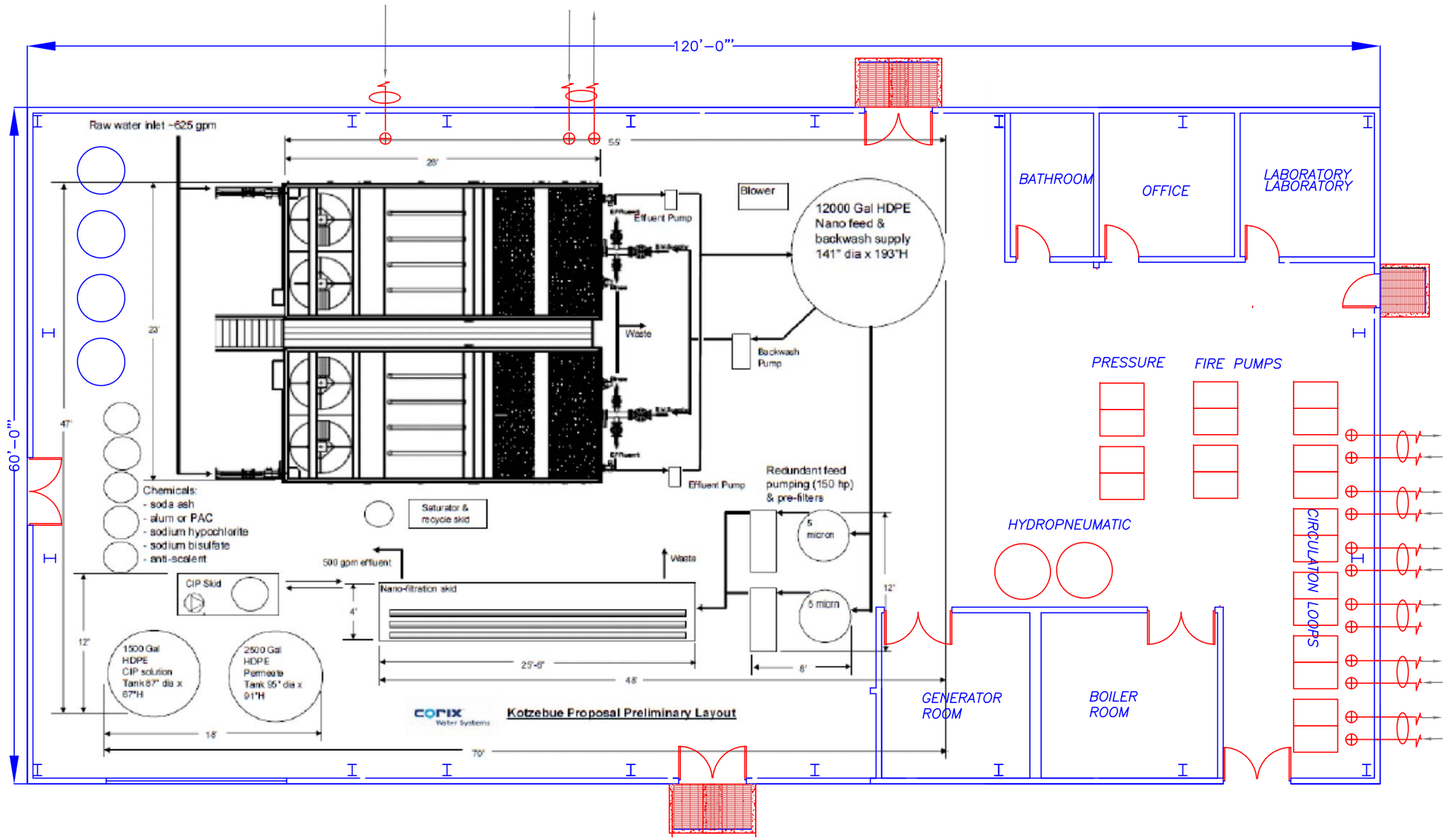

DAF–CONVENTIONAL–NANOFILTRATION (CORIX)

SCALE: NONE

GV Jones & Associates, Inc.
WATER AND WASTEWATER PROCESS ENGINEERS

1200 E 76th AVE.
ANCHORAGE, ALASKA 99518

CITY OF KOTZEBUE
WATER TREATMENT PLANT
REPLACEMENT STUDY

APPENDIX
NEW WATER TREATMENT PLANT
SCHEMATIC

PAGE

HMS Project No. 11084

CONCEPTUAL DESIGN SUBMITTAL
CONSTRUCTION COST ESTIMATE

KOTZEBUE WATER TREATMENT PLANT DEMOLITION
KOTZEBUE, ALASKA

PREPARED FOR:

R&M Consultants
9101 Vanguard Drive
Anchorage, Alaska 99507

June 13, 2011

4103 Minnesota Drive • Anchorage, Alaska 99503 p: 907.561.1653 • f: 907.562.0420 • e: mail@hmsalaska.com

NOTES REGARDING THE PREPARATION OF THIS ESTIMATE

DRAWINGS AND DOCUMENTS

Level of Documents:	'As-built' drawings, structural engineer notes and R&M overview of the project
Date:	June 2011
Provided By:	R&M Consultants of Anchorage, Alaska and their subconsultants

RATES

Pricing is based on current material, equipment and freight costs.

Labor Rates:	A.S. Title 36 working 54 hours/week (13% premium time)

BIDDING ASSUMPTIONS

Contract:	Standard construction contract without restrictive bidding clauses.
Bidding Situation:	Competitive bids assumed.
Bid Date:	Summer 2011
Start of Construction:	Late Summer 2011
Months to Complete:	Within (6) weeks demolition

EXCLUDED COSTS

1. A/E design fees
2. Administrative and management costs
3. Hazmat abatement and contaminated soils remediation, if found during construction
4. Any other work to other facilities, except Water Treatment Plant Building Pods A-G

NOTES REGARDING THE PREPARATION OF THIS ESTIMATE (Continued)

GENERAL

When included in HMS Inc.'s scope of services, opinions or estimates of probable construction costs are prepared on the basis of HMS Inc.'s experience and qualifications and represent HMS Inc.'s judgment as a professional generally familiar with the industry. However, since HMS Inc. has no control over the cost of labor, materials, equipment or services furnished by others, over contractor's methods of determining prices, or over competitive bidding or market conditions, HMS Inc. cannot and does not guarantee that proposals, bids, or actual construction cost will not vary from HMS Inc.'s opinions or estimates of probable construction cost.

This estimate assumes normal escalation based on the current economic climate in Alaska. It is not possible to gauge the effect of the global economic down turn on construction costs in Alaska. HMS Inc. will continue to monitor these events and the resulting construction climate, and will adjust costs and contingencies as deemed prudent.

GROSS FLOOR AREA (DEMOLITION)

Pod A	400	SF
Pod B	800	SF
Pod C	2,000	SF
Pod D	1,200	SF
Pod E	1,000	SF
Pod F	1,300	SF
Pod G	264	SF
TOTAL GROSS FLOOR AREA:	**6,964**	**SF**

Note: Building volume with varying heights: 125,881 C.F.

HMS Project No.: 11084

CONCEPTUAL DESIGN COST SUMMARY

	Material	*Labor*	*Total*
DIVISION 2 - SITE WORK			
Selective Building Demolition and Disposal	$ 127,670	$ 61,409	$ 189,079
Total Building Demolition and Disposal	109,225	130,358	239,583
DIVISION 3 - CONCRETE	0	0	0
DIVISION 4 - MASONRY	0	0	0
DIVISION 5 - METALS	0	0	0
DIVISION 6 - WOOD AND PLASTICS	0	0	0
DIVISION 7 - THERMAL & MOISTURE PROTECTION	0	0	0
DIVISION 8 - DOORS AND WINDOWS	0	0	0
DIVISION 9 - FINISHES	0	0	0
DIVISION 10 - SPECIALTIES	0	0	0
DIVISION 11 - EQUIPMENT	0	0	0
DIVISION 12 - FURNISHINGS	0	0	0
DIVISION 13 - SPECIAL CONSTRUCTION	0	0	0
DIVISION 14 - CONVEYING SYSTEMS	0	0	0
DIVISION 15 - MECHANICAL	0	0	0
DIVISION 16 - ELECTRICAL	0	0	0
SUBTOTAL:	*$ 236,895*	*$ 191,767*	*$ 428,662*
DIVISION 1 - GENERAL REQUIREMENTS			124,798
SUBTOTAL:			*$ 553,460*
DIVISION 17 - CONTINGENCIES			34,937
TOTAL ESTIMATED CONSTRUCTION COST (BID SUMMER 2011):			***$ 588,397***
COST/SF:			*$ 84.49 /SF*
DEMOLITION GROSS FLOOR AREA:			*6,964 SF*

HMS Project No.: 11084

DIVISION 2 - SITE WORK	*QUANTITY*	*UNIT*	*MATERIAL*		*LABOR*		*TOTAL*	*TOTAL*
Selective Building Demolition and Disposal			*RATE*	*TOTAL*	*RATE*	*TOTAL*	*UNIT RATE*	*MATERIAL/LABOR*
			$	*$*	*$*	*$*	*$*	*$*
Note: Per owner, the entire building is hazmat free (there are no contaminated soils).								
Carefully sawcut floor and roof of Building A at old tank connection	30	LF	6.25	188	15.50	465	21.75	653
Remove all water treatment equipment, pumps, tanks, piping, etc. from inside of building (no salvage value allowed)	6,964	SF	0.35	2,437	3.20	22,285	3.55	24,722
Remove all major electrical systems from inside of building (no salvage value allowed)	6,964	SF	0.15	1,045	1.55	10,794	1.70	11,839
Crate and ship demolished materials to Seattle for disposal including fees, etc. (no salvage value allowed)	160	TONS	775.00	124,000	130.00	20,800	905.00	144,800
SUBTOTAL:				*$ 127,670*		*$ 54,344*		*$ 182,014*
Labor Premium Time	13.00%					7,065		7,065
TOTAL ESTIMATED COST:				***$ 127,670***		***$ 61,409***		***$ 189,079***

HMS Project No.: 11084

DIVISION 2 - SITE WORK ***Total Building Demolition***	*QUANTITY*	*UNIT*	*MATERIAL*		*LABOR*		*TOTAL*	*TOTAL*
			RATE	*TOTAL*	*RATE*	*TOTAL*	*UNIT RATE*	*MATERIAL/LABOR*
			$	*$*	*$*	*$*	*$*	*$*
Disconnect all mechanical and electrical active utilities	1	LOT	500.00	500	2500.00	2,500	3000.00	3,000
Carefully demolish metal frame Building A adjacent to tank	4,200	CF			0.70	2,940	0.70	2,940
Demolish metal/frame wood construction Buildings B-G	121,681	CF			0.43	52,323	0.43	52,323
Demolish 4" to 6" thick slab on grade and housekeeping pads, etc.	6,964	SF			2.40	16,714	2.40	16,714
Excavate to expose concrete foundations and stockpile	470	CY			7.50	3,525	7.50	3,525
Demolish 8" concrete foundation walls	2,032	SF			2.95	5,994	2.95	5,994
Demolish concrete footings	508	LF			8.20	4,166	8.20	4,166
Stockpiled backfill	470	CY			5.50	2,585	5.50	2,585
Imported fill to form grade	225	CY	22.00	4,950	6.50	1,463	28.50	6,413
Grade site and revegetate as necessary	9,504	SF	0.05	475	0.32	3,041	0.37	3,516
Load, haul and dispose non-transportable demolished materials at local landfill, including fee (8-mile round trip)	375	TONS	75.00	28,125	20.00	7,500	95.00	35,625
Crate and ship salvageable materials to Seattle (no salvage value assumed)	97	TONS	775.00	75,175	130.00	12,610	905.00	87,785

HMS Project No.: 11084

DIVISION 2 - SITE WORK	*QUANTITY*	*UNIT*	*MATERIAL*		*LABOR*		*TOTAL*	*TOTAL*
			RATE	*TOTAL*	*RATE*	*TOTAL*	*UNIT RATE*	*MATERIAL/LABOR*
Total Building Demolition			*$*	*$*	*$*	*$*	*$*	*$*
SUBTOTAL:				*$ 109,225*		*$ 115,361*		*$ 224,586*
Labor Premium Time	13.00%					14,997		14,997
TOTAL ESTIMATED COST:				***$ 109,225***		***$ 130,358***		***$ 239,583***

DIVISION 1 - GENERAL REQUIREMENTS
AND
DIVISION 17 - CONTINGENCIES

HMS Project No.: 11084

DIVISION 1 - GENERAL REQUIREMENTS	*QUANTITY*	*UNIT*	*MATERIAL*		*LABOR*		*TOTAL*	*TOTAL*
			RATE	*TOTAL*	*RATE*	*TOTAL*	*UNIT RATE*	*MATERIAL/LABOR*
			$	*$*	*$*	*$*	*$*	*$*
Mobilization/demobilization	1	LOT	1000.00	1,000	2500.00	2,500	3500.00	3,500
Demolish equipment - backhoe, truck, jackhammers, compressors, welding machines, etc.	6	WKS	2700.00	16,200	150.00	900	2850.00	17,100
Supervision, etc.	6	WKS	100.00	600	2500.00	15,000	2600.00	15,600
Miscellaneous operations costs including fuel, temporary protection, etc.	6	WKS	500.00	3,000	200.00	1,200	700.00	4,200
As-builts	1	LOT	200.00	200	800.00	800	1000.00	1,000
Demolition permits	1	LOT	3500.00	3,500			3500.00	3,500
Alaska Dept. of Labor fee	1	LOT	2800.00	2,800			2800.00	2,800
Per diem (imported crew, 25%)	40	MD	150.00	6,000			150.00	6,000
Travel costs	3	RT	650.00	1,950			650.00	1,950
SUBTOTAL:				*$ 35,250*		*$ 20,400*		*$ 55,650*
Home Office	3.25%							15,740
Overhead and Profit	8.50%							42,504
Bonds	0.85%							4,612

HMS Project No.: 11084

DIVISION 1 - GENERAL REQUIREMENTS	*QUANTITY*	*UNIT*	*MATERIAL*		*LABOR*		*TOTAL*	*TOTAL*
			RATE	*TOTAL*	*RATE*	*TOTAL*	*UNIT RATE*	*MATERIAL/LABOR*
			$	*$*	*$*	*$*	*$*	*$*
Insurances	1.15%							6,292

TOTAL ESTIMATED COST: ***$ 124,798***

HMS Project No.: 11084

DIVISION 17 - CONTINGENCIES	*QUANTITY*	*UNIT*	*MATERIAL*		*LABOR*		*TOTAL*	*TOTAL*
			RATE	*TOTAL*	*RATE*	*TOTAL*	*UNIT RATE*	*MATERIAL/LABOR*
			$	*$*	*$*	*$*	*$*	*$*
Miscellaneous site conditions unknowns	5.00%							$ 27,673
Escalation to late summer 2011 demolition at 5.00% per annum (3 months)	1.25%							$ 7,264

TOTAL ESTIMATED COST: ***$ 34,937***

OPERATION AND MAINTENANCE COST ESTIMATES

Appendix C

Cost Estimate – Operation and Maintenance

Operation and maintenance (O&M) costs for the water plant and the various water treatment options are developed in this section. The O&M costs are developed to compare between alternatives; the costs for labor, administration, building heat and other energy needs are included. These costs are calculated from a generalized evaluation of a new building, and labor is assumed to be the currently employed staff that operates the existing conventional package water treatment system. The costs include an estimate for electrical energy based on the equipment proposed by the manufacturer such as the control panel, mixers, chemical pumps, and on-skid pressure and flow pumps. The cost of electricity is assumed to be $0.2443 per kilowatt hour, based on the general rates from the Kotzebue Electric Cooperative (KEA) (2011), and the cost of heating fuel is assumed to be $5.00 per gallon (per telephone conversation with the city). An estimate of chemical use for each of the treatment process is made based on a unit feed rate (mg/L) and is considered an approximation. Unit chemical costs are based on the 2009 contract prices provided by the city. The flow rate is assumed to be 500 gpm. The estimate does not include the costs of operating the pumping and distribution system which are included inside the new water treatment building.

KOTZEBUE Water Treatment Plant
Predesign Estimate of O&M Costs -Assumptions

Year 2010 Dollars

Make any changes to this sheet - linked to following sheets

Input Assumptions

Trade Labor Rates

Trade	Average Annual Income ($/yr)	Burdened Labor Factor	Normal Burdened Labor Rate ($/hr)	No.		total	Notes
Operator/Laboratory	$50,000	1.25	$30.05	4	$	250,000	52 weeks, 40 hours
Adminstrative/Bookeeping	$35,000	1.25	$21.03	2	$	87,500	52 weeks, 40 hours
Labor Assumptions:					$	337,500	matching current city budget 2010

Electricity	$ 0.2443	kWh	<10,000 kW	KEA telecon - Martin 5/2011
Fuel costs	$ 5.00	gal		
Flow Rate	500	gpm		
	720,000	gpd		
Heat				
Existing	$ 129,195	2010 city budget		
Proposed - see calcs				

Present worth analysis			
annual interest rate	2.30%	%	USDA requirement - OMB Circ 2010
Term	30	years	USDA requirement

Chemical Addition Assumptions

	mg/L							
Treatment type:	conventional	direct	DAF-filter-nano	MF	UF	Unit Cost, per lb		
KMnO4	4	4	4	4	4	$	3.38	Univar 9/2/2010
Alum	50	3	25	0	0	$	0.66	55 lb @214.75 - 2000# qty
Polymer	7.5	10	0.5	0	0	$	0.74	50 lb @33.00 - 2000# qty
Polymer-filter aid	0.05	0	0.05	0	0	$	1.00	DelPac - 55 gal (590lb) 436.6
Acid	15	0	0	0	0	$	1.00	
Soda ash	15	15	25	0	0	$	0.50	
PAC	10	0	0	0	0	$	1.00	50 lb@25.00 - 2000# qty
Fluoride	0.5	0.5	0.5	0.5	0.5	$	1.00	
O-p	0	0	3	3	3	$	3.00	

Heat Loss Calculation -New Building

Treatment Process

Building Size		Building Size 1		Building Size 2	
	length	120		120	ft
	width	60		45	ft
	height	18		18	ft
Surface Area		13680		11340	ft2
Temperature		21.9	mean annual air		
		65.0	interior		
	ΔT	43	degF		

Material	thickness, inc	k- hr-ft-degF/BTU
sheet metal	0.25	25.000
polyurethane	5	0.015
plywood	0.5	0.075
sheetrock	0.5	0.010

	R = L/k BTU/hr-ft-degF	
sheet metal	0.00	
polyurethane	27.78	
plywood	0.56	
sheetrock	4.17	
R-total	**32.50**	BTU/hr-ft2-degF

Building heat loss				
walls and roof	18,141.32		15,038.20	BTU/hr
Slab on Grade				
area	7200		5400	sqft
U	0.031			BTU/hr-ft2-degF
heat loss	9,619.92		7,214.94	BTU/hr
Air exchange				
air exchange rate	0.5	per hour		
Outside temperature	21.3	degF		
Outside RH	100%	percent		
Inside temperature	65.0	degF		
Inside RH	40	percent		
building volume	129600		97200	cuft
air changes per hour	64800		48600	cf/hr
	1080		810	cfm
Data from psychrometric chart				
Outside				
enthalpy	7.5549	BTU/lb		
specific volume	12.165	ft3/lb		
specific humidity	16.09	grains H2O/lb air		
Inside				
enthalpy	21.2885	BTU/lb		
specific volume	13.3319	ft3/lb		
specific humidity	36.7	grains H2O/lb air		
·gy to heat and humidify				
enthalpy difference	13.7336	BTU/lb		
mass of dry air per hr	4860.5		3645.4	lb air/hr
sensible heat	66752.5		50064.4	BTU/hr
Total Heat loss	94,514		72,317	BTU/hr
	827,940,111		633,501,238	BTU/yr
	8,279		**6,335**	gallon/yr
	$ 41,397		**$ 31,675**	cost/yr

Electrical Loads

Conventional Enhanced (Tonka)

power cost	$ 0.2443	per kWh
water production	500	gpm
	720000	gpd

Description	Number	Phase	Voltage	Amps	kW	Total Load	Run Time per day	Total kWh-per day	Q, gpm	head, ft	calculated water hp	calculated kW
Control panel												
Rapid Mix	1	1	115									
Floc	2	1	115	3.2	0.37	0.74	24	17.76				
Recycle pumps	0	3	460	4.9	2.24	0	24	0.00				
Backwash Pump	1	3	460	6.5	3.00	3	1	3.00				
Air compressor	1	3	230	3.3	0.75	0.75	1	0.75				
Instruments	1	1	115	8.7	1.00	1	12	12.00				
Mixers												
Coag	1	1	115	2.2	0.25	0.25	0.5	0.13				
Soda ash	1	1	115	2.2	0.25	0.25	0.5	0.13				
KMnO4	1	1	115	2.2	0.25	0.25	0.5	0.13				
Polymer	2	1	115	2.2	0.25	0.5	0.5	0.25				
Chem Pumps												
dosing pumps	8	1	115	0.2	0.03	0.2	12	2.40				
Sub-Total												
kW						**6.94**		**36.5**				
cost per day								$ 8.93				
cost per year								$ 3,258				
cost per 1000 gallons								$ 0.01				

Electrical Loads

Conventional Enhanced GAC (Roberts)

power cost	$	0.2443	per kWh
water production		500	gpm
		720000	gpd

Description	Number	Phase	Voltage	Amps	kW	Total Load	Run Time per day	Total kWh-per day	Q, gpm	head, ft	calculated water hp	calculated kW
Control panel												
Rapid Mix	1	1	115	3	0.35	0.345	23	7.94				
Floc	1	1	115	3.2	0.37	0.37	24	8.88				
Recycle pumps	0	3	460	4.9	2.24	0	24	0.00				
Backwash Pump	1	3	460	6.5	3.00	3	1	3.00				
Air compressor	1	3	230	3.3	0.75	0.75	1	0.75				
Instruments	1	1	115	8.7	1.00	1	12	12.00				
Mixers												
Coag	1	1	115	2.2	0.25	0.25	0.5	0.13				
Soda ash	1	1	115	2.2	0.25	0.25	0.5	0.13				
KMnO4	1	1	115	2.2	0.25	0.25	0.5	0.13				
Polymer	1	1	115	2.2	0.25	0.25	0.5	0.13				
Chem Pumps												
dosing pumps	6	1	115	0.2	0.03	0.15	12	1.80				
Total												
kW						**6.27**		**34.87**				
cost per day								$ 8.52				
cost per year								$ 3,109				
cost per 1000 gallons								$ 0.01				

GAC useage calculation

TOC	5	mg/L
Carbon isotherm	175	mg TOC/m Buckland data
Useage rate	343	lb GAC/day
	57.0	equivalent mg/L

Electrical Loads

DAF-Conventional- NF (Corix)

power cost	$	0.2443	per kWh
water production		500	gpm
		720000	gpd

Description	Number	Phase	Voltage	Amps	kW	HP-calculated	Total Load	Run Time per day	Total kWh-per day	Q, gpm	head, ft	calculated water hp	calculated kW
DAF													
Control panel													
Rapid Mix													
Floc	4	1	115	3.2	0.37	0.50	1.48	24	35.52				
Recycle pumps	2	3	460	4.9	2.24	3.00	4.48	24	107.52				
Air compressor	1	3	230	3.3	0.75	1.01	0.75	24	18.00				
Instruments	1	1	115	8.7	1.00	1.34	1	12	12.00				
Mixers													
Coag	1	1	115	2.2	0.25	0.34	0.25	0.5	0.13				
Soda ash	1	1	115	2.2	0.25	0.34	0.25	0.5	0.13				
KMnO4	1	1	115	2.2	0.25	0.34	0.25	0.5	0.13				
Polymer	1	1	115	2.2	0.25	0.34	0.25	0.5	0.13				
Chem Pumps													
dosing pumps	6	1	115	0.2	0.03	0.03	0.15	12	1.80				
Sub-Total													
kW							**8.86**		**175.34**				
cost per day									$ 42.84				
cost per year									$ 15,635				
cost per 1000 gallons									$ 0.06				
NF													
Instrumentation	1	1	115	8.7	1.00	1.34	1	24	24.00				
Feed pumps	1	3	460	100.0	46.00	61.64	46	24	1104.00	625	230	42.7	31.9
CIP heater	1	3	460	104.3	48.00	64.32	48	0.23	11.04				
CIP mixer	1	1	115	2.2	0.25	0.34	0.25	1	0.25				
CIP pump	1	1	460	24.3	11.20	15.01	11.2	0.26	2.91				
Dosing pump	2	1	115	0.3	0.03	0.04	0.06	20	1.20				
Sub-Total													
kW							**106.51**		**1143.40**				
cost per day									$ 279.33				
cost per year									**$ 101,957**				
cost per 1000 gallons									$ 0.39				
Total													
kW									$ 1,319				
cost per day									$ 322				
cost per year									$ 117,592				
cost per 1000 gallons									$ 0.45				

Electrical Loads

Membrane (Microfiltration) (Pall)

power cost	$ 0.2443	per kWh	
water production	500	gpm	
	720000	gpd	

Description	Number	Phase	Voltage	Amps	kW	HP-calculated	Total Load	Run Time hr/day	Total kWh-per day	Q, gpm	heat, ft	calculated water hp	calculated kW
Pretreatment													
Control panel													
Rapid Mix	0												
Floc	0	1	115	3.2	0.37	0.50	0	24	0.00				
Recycle pumps	0	3	460	4.9	2.24	3.00	0	24	0.00				
Air compressor	1	3	230	3.3	0.75	1.01	0.75	24	18.00				
Instruments	1	1	115	8.7	1.00	1.34	1	12	12.00				
Mixers													
Coag	0	1	115	2.2	0.25	0.34	0	0.5	0.00				
Soda ash	1	1	115	2.2	0.25	0.34	0.25	0.5	0.13				
KMnO4	1	1	115	2.2	0.25	0.34	0.25	0.5	0.13				
Polymer	0	1	115	2.2	0.25	0.34	0	0.5	0.00				
Chem Pumps													
dosing pumps	2	1	115	0.2	0.03	0.03	0.05	12	0.60				
Sub-Total													
kW							**2.3**		**30.85**				
cost per day									$ 7.54				
cost per year									$ 2,751				
cost per 1000 gallons									$ 0.01				
MF													
Instrumentation	1	1	115	8.7	1.00	1.34	1	24	24.00				
Feed pumps	1	3	460	50.0	23.00	30.82	23	24	552.00	625	230	42.7	31.9
CIP heater	1	3	460	104.3	48.00	64.32	48	0.23	11.04				
CIP mixer	1	1	115	2.2	0.25	0.34	0.25	1	0.25				
CIP pump	1	1	230	2.0	0.46	0.62	0.46	0.26	0.12	15	100	0.4	0.3
Dosing pump	1	1	2230	2.0	4.46	5.98	4.46	20	89.20				
Sub-Total													
kW							**77.17**		**676.61**				
cost per day									$ 165.30				
cost per year									**$ 60,333**				
cost per 1000 gallons									$ 0.23				
Total													
kW									$ 707.46				
cost per day									$ 172.83				
cost per year									$ 63,083.82				
cost per 1000 gallons									0.24				

Electrical Loads

Immersed Membrane (Ultrafiltration) (GE Zbox)

power cost	$ 0.2443	per kWh	
water production	500	gpm	
	720000	gpd	

Description	Number	Phase	Voltage	Amps	kW	HP-calculated	Total Load	Run Time per day	Total kWh-per day	Q, gpm	heat, ft	calculated water hp	calculated kW
Pretreatment													
Control panel													
Rapid Mix	0												
Floc	0	1	115	3.2	0.37	0.50	0	24	0.00				
Recycle pumps	0	3	460	4.9	2.24	3.00	0	24	0.00				
Air compressor	1	3	230	3.3	0.75	1.01	0.75	24	18.00				
Instruments	1	1	115	8.7	1.00	1.34	1	12	12.00				
Mixers													
Coag	0	1	115	2.2	0.25	0.34	0	0.5	0.00				
Soda ash	1	1	115	2.2	0.25	0.34	0.25	0.5	0.13				
KMnO4	1	1	115	2.2	0.25	0.34	0.25	0.5	0.13				
Polymer	1	1	115	2.2	0.25	0.34	0.25	0.5	0.13				
Chem Pumps													
dosing pumps	3	1	115	0.2	0.03	0.03	0.075	12	0.90				
SubTotal													
kW							**2.575**		**31.3**				
cost per day									$ 7.64				
cost per year									$ 2,789				
cost per 1000 gallons									$ 0.01				
UF													
Instrumentation	1	1	115	8.7	1.00	1.34	1	24	24.00				
Feed pumps	1	3	460	50.0	23.00	30.82	23	24	764.62	625	230	42.7	31.9
CIP heater	1	3	460	104.3	48.00	64.32	48	0.23	11.04				
CIP mixer	1	1	115	2.2	0.25	0.34	0.25	1	0.25				
CIP pump	1	1	230	2.0	0.46	0.62	0.46	0.26	0.15	15	100	0.4	0.3
Dosing pump	1	1	2230	2.0	4.46	5.98	4.46	20	89.20				
SubTotal													
kW							**77.17**		**889.3**				
cost per day									$ 217.25				
cost per year									**$ 79,295**				
cost per 1000 gallons									$ 0.30				
Total													
kW									$ 920.53				
cost per day									$ 224.89				
cost per year									$ 82,083.62				
cost per 1000 gallons									0.31				

Electrical Loads

MF-NF

power cost $ 0.2443 per kWh
water production 500 gpm
720000 gpd

Description	Number	Phase	Voltage	Amps	kW	HP-calculated	Q, gpm	TDH, ft	HP- water	kW	Total Load	Run Time per day	Total kWh-per day	Q, gpm	head, ft	calculated water hp	calculated kW
MF																	
Control panel																	
Rapid Mix																	
Floc	0	1	115	3.2	0.37	0.50					0	24	0.00				
Air compressor	0	3	230	3.3	0.75	1.01					0	2	0.00				
Instruments	1	1	115	8.7	1.00	1.34					1	12	12.00				
Mixers																	
Coag	0	1	115	2.2	0.25	0.34					0	0.5	0.00				
Soda ash	0	1	115	2.2	0.25	0.34					0	0.5	0.00				
KMnO4	0	1	115	2.2	0.25	0.34					0	0.5	0.00				
Polymer	0	1	115	2.2	0.25	0.34					0	0.5	0.00				
Chem Pumps																	
dosing pumps	0	1	115	0.2	0.03	0.03					0	12	0.00				
Sub-Total																	
kW											**1**		**12**				
cost per day													$ 2.93				
cost per year													$ 1,070				
cost per 1000 gallons													$ 0.00				
MF																	
Instrumentation	1	1	115	8.7	1.00	1.34					1	24	24.00				
Feed pumps	1	3	460	100.0	46.00	61.64	625	44	8.2	6.1	6.1	24	146.27				6.1
Return pump	1	3	460	4.9	2.25	3.02	688	40	8.2	6.1	6.1	2.5	15.24				6.1
CIP heater	1	3	460	104.3	48.00	64.32					48	0.01	0.48				
CIP mixer	1	1	115	2.2	0.25	0.34					0.25	0.0014	0.00				
CIP pump	1	1	460	24.3	11.20	15.01					11.2	0.0014	0.02				
Dosing pump	2	1	115	0.3	0.03	0.04					0.06	0.0014	0.00				
NF																	
Instrumentation	1	1	115	8.7	1.00	1.34					1	24	24.00				
Feed pumps	1	3	460	100.0	46.00	61.64	625	230	42.7	31.9	31.85903	24	764.62				31.9
CIP heater	1	3	460	104.3	48.00	64.32					48	0.01	0.48				
CIP mixer	1	1	115	2.2	0.25	0.34					0.25	0.0014	0.00				
CIP pump	1	1	460	24.3	11.20	15.01					11.2	0.0014	0.02				
Dosing pump	2	1	115	0.3	0.03	0.04					0.06	0.0014	0.00				
Sub-Total																	
kW											**165.0686**		**975.12**				
cost per day													$ 238.22				
cost per year													**$ 86,951**				
cost per 1000 gallons													$ 0.33				
Total																	
kW													987.12				
cost per day													$ 241.15				
cost per year													$ 88,021.01				
cost per 1000 gallons													$ 0.33				

total water use	432,000	gpd
	0.43	mgd
	157,680,000	gpyear

Chemical	FY2010 cost	weight/vol	ordere unit cost	unit weight	cost/lb	avg feed rate mg/L	lbs/day	cost/day	mg/L	lbs/day	pilot plant-2006 summer cost/day
cmi 633	$ 2,385	5	$ 477.00	27500	$ 0.09	20.9	75.34	$ 6.53	0.12	0.43	$ 0.04
NaF	$ 2,533	1700	$ 1.49	1700	$ 1.49	1.3	4.66	$ 6.94	1.3	4.68	$ 6.98
PAC	$ 21,798	12600	$ 1.73	12600	$ 1.73	9.6	34.52	$ 59.72	5.4	19.46	$ 33.66
CMI 473	$ 32,862	15	$ 2,190.80	82500	$ 0.40	62.7	226.03	$ 90.03	5.5	19.82	$ 7.89
NaCl	$ 14,774	22050	$ 0.67	22050	$ 0.67	16.8	60.41	$ 40.48		-	$ -
Alum	$ 16,440	24000	$ 0.69	24000	$ 0.69	18.3	65.75	$ 45.04	33	118.90	$ 81.44
KMnO4	$ 8,140	2035	$ 4.00	2035	$ 4.00	1.5	5.58	$ 22.30	3.3	11.89	$ 47.56
NaCO3	$ 29,970	54000	$ 0.56	54000	$ 0.56	41.1	147.95	$ 82.11	5.25	18.92	$ 2.91
	$ 128,902						cost/day	$ 353.15			$ 180.48
							cost/yr	$ 128,902			$ 65,876

Heat Loss Calculation - Existing Building

Building Size		
length	80	ft
width	80	ft
height	10	ft
Surface Area	9600	ft2
Temperature	21.9	mean annual air
	65.0	interior
ΔT	43	degF

Material	thickness, inc	k- hr-ft-degF/BTU
sheet metal	0.25	25.000
polyurethane	3	0.025
plywood	0.5	0.075
sheetrock	0.5	0.010

	R = L/k BTU/hr-ft-degF	
sheet metal	0.00	
polyurethane	10.00	
plywood	0.56	
sheetrock	4.17	
R-total	**14.72**	BTU/hr-ft2-degF

Building heat loss

walls and roof	28,102.86	BTU/hr

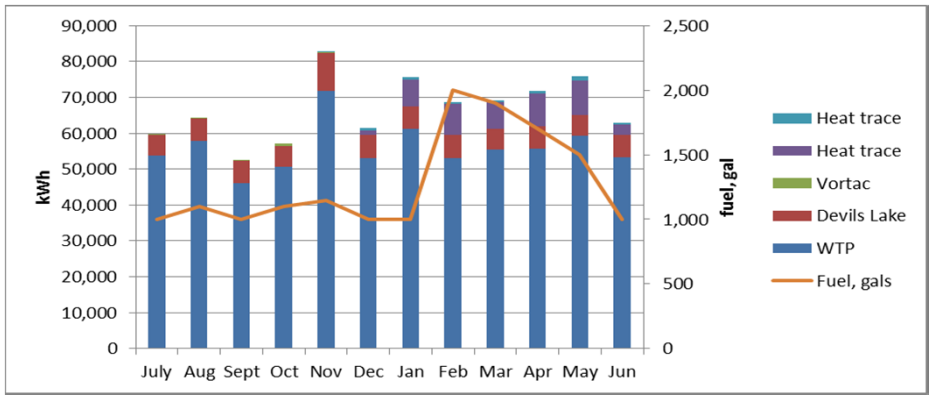

from 2009 operation data

Present worth analysis

annual interest rate	2.30%
Term	30 years

Output

	Summary	Capital Cost: Equipment Cost	New Building	Total Capital Cost	Operation Cost: Electrical Cost/yr	Chemical Cost/yr	CIP Cost/yr	Labor Costs	Bld Heating	Total minus bld heat	Total	Equip+Operations (no bldg heat)	Bldg Only+Bldg Heat	Equip+Bldg+Operations	Uncertainty range: 30%	-15%	
1	Conventional, Enhanced Flocculation (Tonka	$ 3,035,000	$10,970,000	$ 14,010,000	$ 3,300	$ 186,600	$ -	$ 337,500	$ 41,400	$ 527,400	$ 569,000	$ 14,373,838	$ 11,860,079	$ 26,243,000	$ 34,115,900	$ 22,306,550	$ 26,243,000
2	Conventional, Enhanced Flocculation, GAC (I	$ 1,528,000	$10,970,000	$ 12,500,000	$ 3,100	$ 442,900	$ -	$ 337,500	$ 41,400	$ 783,500	$ 825,000	$ 18,372,860	$ 11,860,079	$ 30,237,000	$ 39,308,100	$ 25,701,450	$ 30,237,000
3	DAF-Conventional- NF (Corix)	$ 3,358,000	$10,970,000	$ 14,330,000	$ 117,600	$ 120,022	$ 24,822	$ 337,500	$ 41,400	$ 599,944	$ 617,000	$ 16,256,498	$ 11,860,079	$ 27,595,000	$ 35,873,500	$ 23,455,750	$ 27,595,000
4	Oxidation - Immersed Membrane Ultrafiltrat	$ 4,330,000	$8,900,000	$ 13,230,000	$ 63,100	$ 99,422	$ 24,822	$ 337,500	$ 31,675	$ 524,844	$ 532,000	$ 15,613,885	$ 9,580,998	$ 24,668,000	$ 32,068,400	$ 20,967,800	$ 24,668,000
5	Oxidation - Membrane Microfiltration (Pall)	$ 1,672,000	$10,970,000	$ 12,640,000	$ 82,100	$ 99,422	$ 24,822	$ 337,500	$ 41,400	$ 543,844	$ 560,000	$ 13,364,375	$ 11,860,079	$ 24,680,000	$ 32,084,000	$ 20,978,000	$ 24,680,000
6	MF-NF	$ 2,660,000	$8,900,000	$ 11,560,000	$ 88,000	$ 95,333	$ 37,233	$ 337,500	$ 31,675	$ 558,066	$ 553,000	$ 14,658,141	$ 9,580,998	$ 23,449,000	$ 30,483,700	$ 19,931,650	$ 23,449,000
7	Rehab Existing WTP and New MF/NF	$ 2,160,000	$ 19,970,000	$ 22,130,000	$ 217,195	$ 224,233	$ 37,233	$ 337,500	$ 73,075	$ 816,161	$ 852,000	$ 19,707,056	$ 21,541,077	$ 40,448,000	$ 52,582,400	$ 34,380,800	$ 40,448,000
8	Existing Plant				$ 129,195	$ 128,900		$ 337,500	$ 41,400	$ 595,595	$ 637,000						

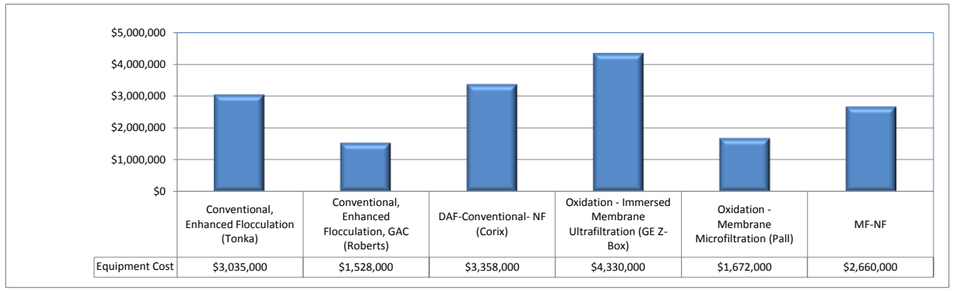

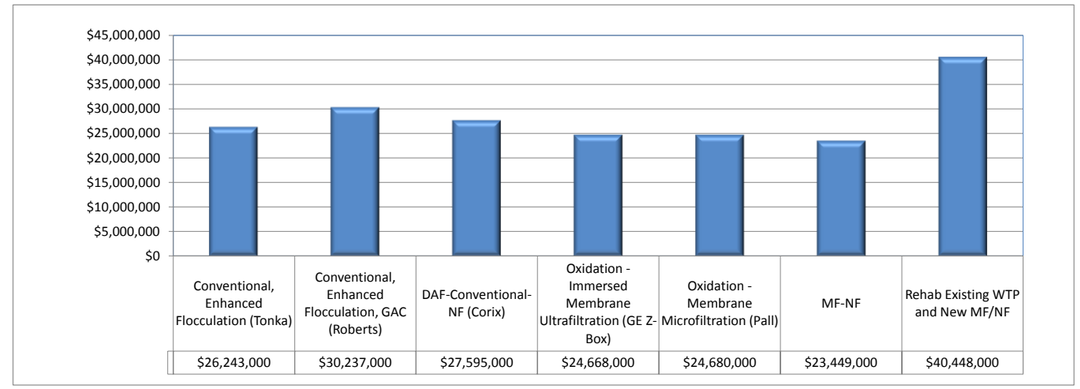

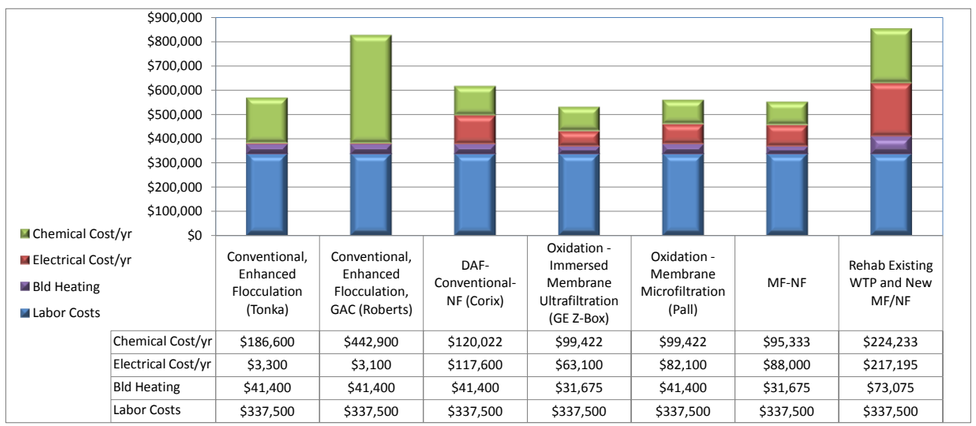

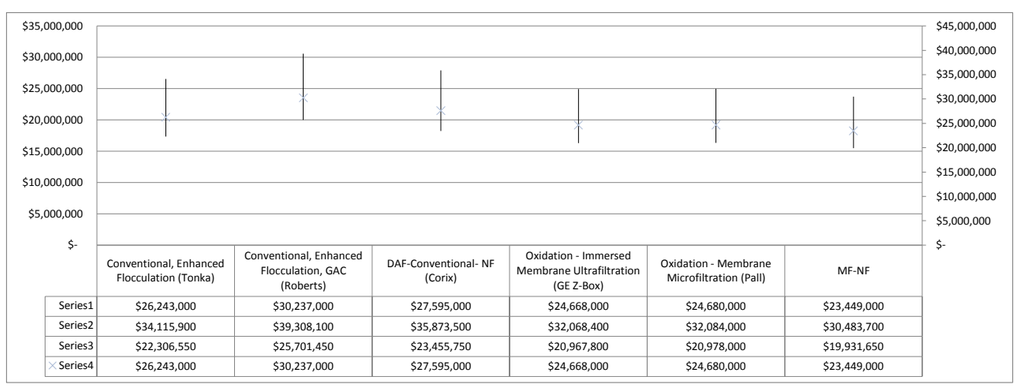

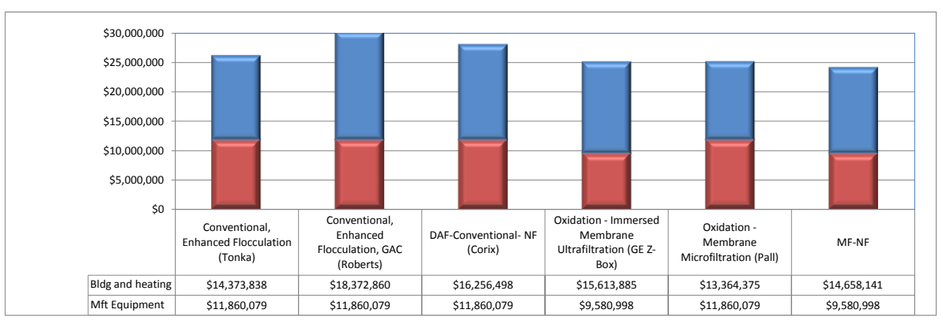

Circular A-94 Appendix C

Revised December 2010

OMB Circular No. A-94

Click here for PDF assistance

DISCOUNT RATES FOR COST-EFFECTIVENESS, LEASE PURCHASE, AND RELATED ANALYSES

Effective Dates. This appendix is updated annually. This version of the appendix is valid for calendar year 2011. A copy of the updated appendix can be obtained in electronic form through the OMB home page at http://www.whitehouse.gov/omb/circulars_a094/a94_appx-c/ the text of the main body of the Circular is found at http://whitehouse.gov/omb/circulars_a094/, and a table of past years' rates is located at http://whitehouse.gov/sites/default/files/omb/assets/a94/dischist.pdf. Updates of the appendix are also available upon request from OMB's Office of Economic Policy (202-395-3381).

Nominal Discount Rates. A forecast of nominal or market interest rates for 2011 based on the economic assumptions for the Fiscal Year 2012 Budget are presented below. These nominal rates are to be used for discounting nominal flows, which are often encountered in lease-purchase analysis.

Nominal Interest Rates on Treasury Notes and Bonds of Specified Maturities (in percent)

Reports
Federal Register
FOIA
No FEAR
OMB Locator

3-Year	5-Year	7-Year	10-Year	20-Year	30-Year
1.4	1.9	2.4	3.0	3.9	4.2

Real Discount Rates. A forecast of real interest rates from which the inflation premium has been removed and based on the economic assumptions from the 2012 Budget is presented below. These real rates are to be used for discounting constant-dollar flows, as is often required in cost-effectiveness analysis.

Real Interest Rates on Treasury Notes and Bonds of Specified Maturities (in percent)

3-Year	5-Year	7-Year	10-Year	20-Year	30-Year
0.0	0.4	0.8	1.3	2.1	2.3

Analyses of programs with terms different from those presented above may use a linear interpolation. For example, a four-year project can be evaluated with a rate equal to the average of the three-year and five-year rates. Programs with durations longer than 30 years may use the 30-year interest rate.

Other Documents

Text of OMB Circular No. A-94 in HTML or PDF (22 pages, 78 kb)

Table of Past Years Discount Rates from Appendix C of OMB Circular No. A-94 (2 pages, 26 kb)

Memorandum M-11-12, 2011 Discount Rates for OMB Circular No. A-94 (2 pages, 31 kb)

Top of Page

Share/Bookmark

WWW.WHITEHOUSE.GOV

En español | Accessibility | Copyright Information | Privacy Policy | Contact
USA.gov | Subscribe to RSS Feeds | Apply for a Job

Get Email Updates | Conta

APPENDIX D

CALCULATIONS

CALCULATIONS

Population Data (source: DCRA community profile)

Input Data — data entry

	Date	Population	Percentage change	Equivalent annual change
	1880			
	1890			
	1900	200		
	1910	193		
	1920	230		
	1930	291		
1/1/40	1940	372		
1/1/50	1950	623		
1/1/60	1960	1290		
1/1/70	1970	1696	2.39%	
1/1/80	1980	2054	1.74%	
1/1/90	1990	2751	2.53%	
1/1/00	2000	3082	1.07%	
1/1/10	2010	3201	0.37%	
			1.62%	

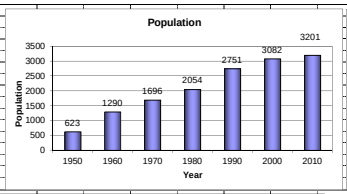

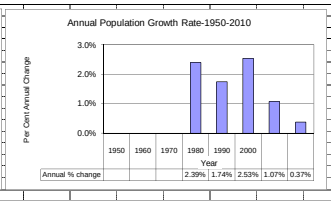

Current Trend Linear Projection — Growth, %

Year	0.0%	0.5%	1.0%	1.5%	2.0%	2.5%	3.0%	3.5%	4.0%
1890									
1900									
1910									
1920									
1930									
1940									
1950									
1960									
1970	1696								
1980	2054								
1990	2751								
2000	3082								
2001									
2002									
2003									
2004									
2005									
2006									
2007									
2008									
2009									
2010	3,201	3,201	3,201	3,201	3,201	3,201	3,201	3,201	3,201
2011	3,201	3,217	3,233	3,249	3,265	3,281	3,297	3,313	3,329
2012	3,201	3,233	3,265	3,298	3,330	3,363	3,396	3,429	3,462
2013	3,201	3,249	3,298	3,347	3,397	3,447	3,498	3,549	3,601
2014	3,201	3,266	3,331	3,397	3,465	3,533	3,603	3,673	3,745
2015	3,201	3,282	3,364	3,448	3,534	3,622	3,711	3,802	3,895
2016	3,201	3,298	3,398	3,500	3,605	3,712	3,822	3,935	4,050
2017	3,201	3,315	3,432	3,553	3,677	3,805	3,937	4,073	4,212
2018	3,201	3,331	3,466	3,606	3,750	3,900	4,055	4,215	4,381
2019	3,201	3,348	3,501	3,660	3,825	3,998	4,177	4,363	4,556
2020	3,201	3,365	3,536	3,715	3,902	4,098	4,302	4,515	4,738
2021	3,201	3,382	3,571	3,771	3,980	4,200	4,431	4,673	4,928
2022	3,201	3,398	3,607	3,827	4,060	4,305	4,564	4,837	5,125
2023	3,201	3,415	3,643	3,885	4,141	4,413	4,701	5,006	5,330
2024	3,201	3,432	3,679	3,943	4,224	4,523	4,842	5,181	5,543
2025	3,201	3,450	3,716	4,002	4,308	4,636	4,987	5,363	5,765
2026	3,201	3,467	3,753	4,062	4,394	4,752	5,137	5,550	5,995
2027	3,201	3,484	3,791	4,123	4,482	4,871	5,291	5,745	6,235
2028	3,201	3,502	3,829	4,185	4,572	4,992	5,449	5,946	6,485
2029	3,201	3,519	3,867	4,248	4,663	5,117	5,613	6,154	6,744
2030	3,201	3,537	3,906	4,311	4,757	5,245	5,781	6,369	7,014
2031	3,201	3,554	3,945	4,376	4,852	5,376	5,955	6,592	7,294
2032	3,201	3,572	3,984	4,442	4,949	5,511	6,133	6,823	7,586
2033	3,201	3,590	4,024	4,508	5,048	5,649	6,317	7,062	7,890
2034	3,201	3,608	4,064	4,576	5,149	5,790	6,507	7,309	8,205
2035	3,201	3,626	4,105	4,644	5,252	5,934	6,702	7,565	8,533
2036	3,201	3,644	4,146	4,714	5,357	6,083	6,903	7,830	8,875
2037	3,201	3,662	4,188	4,785	5,464	6,235	7,110	8,104	9,230
2038	3,201	3,681	4,229	4,857	5,573	6,391	7,324	8,387	9,599
2039	3,201	3,699	4,272	4,929	5,684	6,551	7,543	8,681	9,983
2040	3,201	3,718	4,314	5,003	5,798	6,714	7,770	8,985	10,382
2041	3,201	3,736	4,358	5,078	5,914	6,882	8,003	9,299	10,797

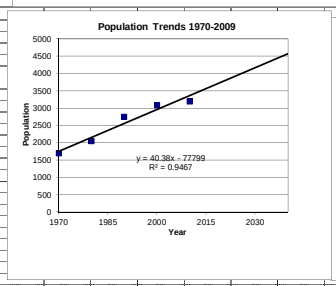

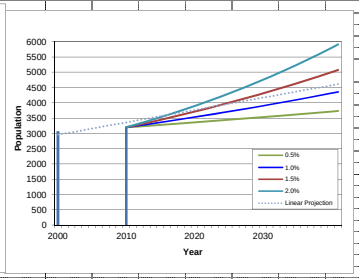

Fair, Geyer, and Okun present a population model ("Elements of Water Supply and Wastewater Disposal," 2nd ed., John Wiley & Sons, New York, 1971) credited to P.F. Verhulst and known as the "logistic growth curve. The model is based on first order, reactant-limited kinetic equations, following the form of equations used in basic chemical kinetics. The assumptions for these equations are that production of a species (in this case humans) will occur whenever possible, limited by some other species. For the case of chemical kinetics, this species is one or more of the reactants in a chemical equation (such as limiting A in A + B --> C). For bacterial populations, this type of equation has been found to be fairly discriptive since bacterial reproduction is essentially growth-limited by the concentration of a food substrate; provided sufficient substrate the bacteria will multiply at a given rate indefinitely. Similar models have been used in animal populations as well, and are somewhat effective, provided food or some other resource substantially limits the ability of the animals to reproduce. In the human case, this model assumes that any number of effects in combination form the "limiting factor," and that they will act similarly under all circumstances (ie that exodus due to economic constraints will remain equally important relative to birth rate due to the population of child-bearing adults). It is also assumed that the system will reach a saturation population at some time, infinitely far in the future, which the population may never exceed. The population has its maximum growth rate at 1/2 the saturation population.

The equation used is y=L/[1+p*e^-(q*t)], which can not be linearized for y and t, so an iterative numerical process must be used to find the parameters L, p, and q. L is the saturation population. The method we will use is to rewrite the equation as Y = m*X+b, using an assumed L value, then

Year	Population	dy/dt (people/year)
1910	193	
1920	230	3.7
1940	372	7.1
1950	623	25.1
1960	1290	66.7
1970	1696	40.6
1980	2054	35.8
1990	2751	69.7
2000	3082	33.1
2010	3201	11.9

				u	v		
Assumed t_0	1910						
Assumed L	4000	**Y**	**X**	**X_i-X-bar**	**Y_i-Y-bar**	**u*v**	**u^2**
Y	ln(L/y-1)	2.981907	0	-53	2.246662	-119.0731	2809.00
m	-q	2.796751	10	-43	2.061506	-88.64476	1849.00
X	t	2.277543	30	-23	1.542298	-35.47286	529.00
b	ln(p)	1.690197	40	-13	0.954952	-12.41437	169.00
		0.742306	50	-3	0.007062	-0.021185	9.00
		0.306374	60	7	-0.428871	-3.002095	49.00
		-0.054013	70	17	-0.789258	-13.41739	289.00
		-0.789621	80	27	-1.524866	-41.17139	729.00
		-1.211137	90	37	-1.946382	-72.01612	1369.00
		-1.387858	100	47	-2.123102	-99.78582	2209.00

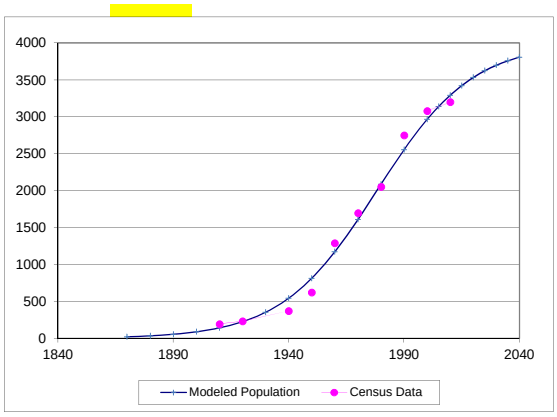

X-bar	53
Y-bar	0.735245
ss_xy	-485.019
ss_xx	10010.00
m	-0.048453
b	3.303278
Y = m*X + b	

Our parameters are then

p	27.20165
q	0.048453
L	4000

Here's some projections:

Date	**Population**
1870	21
1880	34
1890	55
1900	89
1910	142
1920	225
1930	353
1940	544
1950	814
1960	1172
1970	1609
1980	2088
1990	2558
2000	2969
2005	3143
2010	3295
2015	3425
2020	3534
2025	3625
2030	3700
2035	3760
2040	**3810**

Components of Potable Water Source and Storage																
Current Demands					**10-year Design Demands**							**20-year Design Demands**				
Daily per capita Demand	100	gpcd	Water Demand Ratios		Daily per capita Demand	100	gpcd	Water Demand Ratios				Daily per capita Demand	100	gpcd	Water Demand Ratios	
Population	3201		Max/Avg	1.5	Design Population	3702		Max/Avg	1.5			Design Population	4250		Max/Avg	1.5
Flow Rate, avg	320,100	gpd	Peakhrly/Avg	4	Design Flow Rate, avg	370,200	gpd	Peakhrly/Avg	4			Design Flow Rate, avg	425,000	gpd	Peakhrly/Avg	4
Flow Rate, max	480,150	gpd	Peakinst/Avg	6	Design Flow Rate, max	555,300	gpd	Peakinst/Avg	6			Design Flow Rate, max	637,500	gpd	Peakinst/Avg	6
Flow Rate, avg	222.3	gpm	24 hrs/day operation		Design Flow Rate, avg	257.1	gpm	24 hrs/day operation				Design Flow Rate, avg	295.1	gpm	24 hrs/day operation	
Flow Rate, avg	444.6	gpm	12 hrs/day operation		Design Flow Rate, avg	514.2	gpm	12 hrs/day operation				Design Flow Rate, avg	590.3	gpm	12 hrs/day operation	
Flow Rate, max	333.4	gpm	24 hrs/day operation		Design Flow Rate, max	385.6	gpm	24 hrs/day operation				Design Flow Rate, max	442.7	gpm	24 hrs/day operation	
Flow Rate, peakhrly	889.2	gpm	24 hrs/day operation		Design Flow Rate, peakhrly	1028.3	gpm	24 hrs/day operation				Design Flow Rate, peakhrly	1180.6	gpm	24 hrs/day operation	
Flow Rate, peak instaneous	1333.8	gpm			Design Flow Rate, peak instaneous	1542.5	gpm					Design Flow Rate, peak inst	1770.8	gpm		
Current Population					**10-year Design Population**							**20-year Design Population**				
Storage Component	**Volume**		**Comments**		**Storage Component**	**Volume**		**Comments**				**Storage Component**	**Volume**		**Comments**	
	(gallons)					**(gallons)**							**(gallons)**			
Equalization	80,025		Based on 25% ave. daily demand		Equalization	92,550		Based on 25% ave. daily demand				Equalization	106,250		Based on 25% ave. daily de	
Fire Flows	60,000		none		Fire Flows	60,000		none				Fire Flows	60,000		none	
Emergency Storage	640,200		Assume 2-days		Emergency Storage	740,400		Assume 2-days				Emergency Storage	850,000		Assume 2-days	
Dead Storage	39,011		Assumed 5% above		Deadwood	44,648		Assumed 5% above				Deadwood	50,813		Assumed 5% above	
Total Storage	819,236				Total Storage	937,598						Total Storage	1,067,063			
					Volume based on emergency							Volume based on emergency				
Volume based on emergency	100	gpcpd				100	gpcpd						100	gpcpd		
emergency days					emergency days							emergency days				
1	320,100	gpd			1	370,200	gpd					1	425,000	gpd		
2	640,200	gal			2	740,400	gal					2	850,000	gal		
3	960,300	gal			3	1,110,600	gal					3	1,275,000	gal		
4	1,280,400	gal			4	1,480,800	gal					4	1,700,000	gal		
5	1,600,500	gal			5	1,851,000	gal					5	2,125,000	gal		

Calculation of Log-inactivation for pipeline

	Current	20-year	30-year	
Qpeak hrly	889	1181	1389	gpm
chlorine		0.4		mg/L
pH		7		
Temp		33		degF
		0.56		degC

Current Conditions

Diameter, in	Length,ft	Vol, cuft	Vol, gal	HRT, minu	Baffle Fact	CT Avail	Available Log Inactivatior
0	0	0.0	0.0	0.0	1.0	0.0	0.00
0	0	0.0	0.0	0.0	1.0	0.0	0.00
Tank							
			2,800,000	3149.0	0.1	126.0	1.98
Total			0.0	0.0		126.0	1.98

20-year conditions

	Length,ft	Vol, cuft	Vol, gal	HRT, minu	Baffle Fact	CT Avail	Available Log Inactivatior
0	0	0.0	0.0	0.0	1.0	0.0	0.00
Tank							
			2,800,000	2371.8	0.1	94.9	1.49
Total			0.0	0.0		94.9	1.49

30-year conditions

	Length,ft	Vol, cuft	Vol, gal	HRT, minu	Baffle Fact	CT Avail	Available Log Inactivatior
0	0	0.0	0.0	0.0	1.0	0.0	0.00
Tank							
			2,800,000	2016.0	0.1	80.6	1.27
Total			0.0	0.0		80.6	1.27

Giardia- free chlorine

Ref: Alaska Water Treatment Guidance Manual pg 4-120

Equation: CT = (log inactivation)(5.057)(e^-0.0693*temp)(e^0.361*pH)(e^0.113*Cl)

Reqd CT, (mg/l)*min		log inactiva	pH	Cl (mg/L)	Temp oC
32	Required	0.5	7.0	0.4	0.6
64	Required	1.0	7.0	0.4	0.6
96	Required	1.5	7.0	0.4	0.6
127	Required	2.0	7.0	0.4	0.6
159	Required	2.5	7.0	0.4	0.6
191	Required	3.0	7.0	0.4	0.6

Population Peak Instaneous Curve (Hunter)							
Category	Populaton						
	Current	10-year	20-year	30-year			
Present conditions	3201	3702	4250	5000			
Equivalent Households							
per residence population	3.4	3.4	3.4	3.4			
Equiv units	941	1089	1250	1471			
Peak instaneous demand, gpm	**592**	**625**	**657**	**735**	Cold regions manual curve		
avg daily demand, gpm	222	257	295.1389	347.2222			
Ratio- Peak instan/Avg	2.7	2.4	2.2	2.1			
Cold regions manual curve							
Cold Regions- best fit equation							
MMF Model: y=(a*b+c*x^d)/(b+x^d)							
Coefficient Data:							
a =	0.110807						
b =	144.1221						
c =	1368.241						
d =	0.686115						

	Current Year	10-year	20-year	30-year		
Avg daily flow	320,100	370,200	425,000	500,000	gpd	
	222	257	295	347	gpm	24 hr operation
	333	386	443	521	gpm	16 hr operation
	445	514	590	694	gpm	12 hr operation
	667	771	885	1042	gpm	8 hr operation
Water Plant Capacity						
conventional_direct						
assumption	5%	5%	5%	5%	backwash percentage	
Capacity reqd	233	270	310	**365**	gpm	24 hr operation
	350	405	465	547	gpm	16 hr operation
	467	540	620	729	gpm	12 hr operation
	700	810	930	1094	gpm	8 hr operation
MF_NF						
	80%	80%	80%	80%	production	
Capacity reqd	278	321	369	**434**	gpm	24 hr operation
	417	482	553	651	gpm	16 hr operation
	556	643	738	868	gpm	12 hr operation
	834	964	1,107	1,302	gpm	8 hr operation

Assumptions
1. use 3 shifts - 24 hr total operation-30 years
2. design capacity -434 gpm

		KWH	$	0.30				
		Fuel	$	5.00				
		WTP	Devils Lake	Vortac	Heat trace	Heat trace		
		kwh						Fuel, gals
2009	July	53760	5742	32				1000
	Aug	57920	6246	41				1100
	Sept	46080	6233	47				1000
	Oct	50560	5884	649				1100
	Nov	71840	10593	98	95	215		1145
	Dec	52960	6567	113	1097	653		1000
2010	Jan	61280	6226		7335	713		1000
	Feb	53120	6362		8611	646		2000
	Mar	55360	5736		7523	573		1900
	Apr	55680	6205	9	9104	714		1700
	May	59200	5898		9643	1090		1500
	Jun	53280	6351		2853	316		1000
	Total	671040	78043	989	46261	4920	801,253	15445

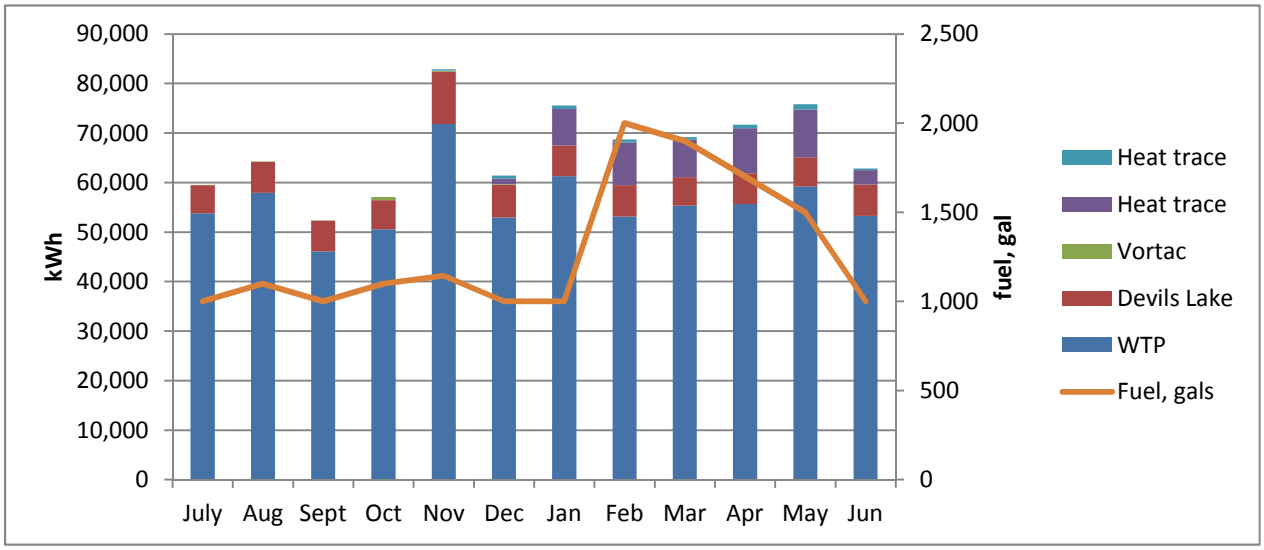

Annual Costs		
electricity	$	240,376
fuel	$	77,224
total	$	317,599

Criteria 1 = least desirable 5 = most desirable	Conventional – Enhanced Coagulation	Conventional – Enhanced Coagulation – GAC	DAF-Conventional - Nanofiltration	Immersed Membrane (Ultrafiltration)	Membrane (Ultrafiltration)	MF/NF	Weight 1 = least important 5 = most important
MONETARY							
Capital Cost	4	5	3	4	5	5	3
Operation and Maintenance Cost	5	3	4	5	5	5	5
Life Cycle Cost	3	2	3	4	5	5	5
TOTAL WEIGHTED SCORE MONETARY*	52	40	44	57	65	65	
NON-MONETARY							
Meet Current/Proposed Regulations	1	2	5	4	4	5	5
Meet Possible Future Regulations	1	2	5	3	3	5	4
Water Quality / Public Health	1	2	5	4	4	5	4
Process Reliability	5	5	4	4	4	4	5
Maintenance Requirements	2	2	3	3	3	3	5
Ease of Operation	2	2	3	3	3	3	4
Ease of Expansion	1	1	4	4	4	4	4
Certification Requirements	2	2	1	3	3	3	2
Viability to Construct	4	5	5	5	5	5	5
TOTAL WEIGHTED SCORE NON-MONETARY*							
	84	102	155	142	142	159	
COMBINED WEIGHTED SCORE*	136	142	199	199	207	224	

CIP Cost estimate						
Data source: Hydranautics						
Treatment Process	MF	NF				
Stage 1						
number	12	12				
elements	7	7				
size	8x40	8x40				
Stage 2						
number	6	6				
elements	7	7				
size	8x40	8x40				
Total elements	126	126				
CIP per element, gal	9	9	normal fouling - per hydranautics			
Volume CIP	1134	1134	gal			
adjustment for piping, etc.	20%	20%				
Totol CIP volume	1400	1400	gal			
Chemical qty -MF	lbs per 100 gal	lbs per CIP	CIP/yr	lbs/yr	Cost/lb	Cost/yr
citric	17	238	12	2856	$ 4.00	$ 11,424.00
TSP	17	238	12	2856	$ 2.00	$ 5,712.00
HCl	0.47	6.58	12	78.96	$ 2.50	$ 197.40
NaOH	0.83	11.62	12	139.44	$ 2.50	$ 348.60
Sodium Metabisulfite	8.5	119	12	1428	$ 5.00	$ 7,140.00
					Total	$ 24,822.00
Chemical qty -NF	lbs per 100 gal	lbs per CIP	CIP/yr	lbs/yr	Cost/lb	Cost/yr
citric	17	238	6	1428	$ 4.00	$ 5,712.00
TSP	17	238	6	1428	$ 2.00	$ 2,856.00
HCl	0.47	6.58	6	39.48	$ 2.50	$ 98.70
NaOH	0.83	11.62	6	69.72	$ 2.50	$ 174.30
Sodium Metabisulfite	8.5	119	6	714	$ 5.00	$ 3,570.00
					Total	$ 12,411.00
					Total	$ 37,233.00

Data source: Hydranautics						
Treatment Process	NF					
Stage 1						
number	12					
elements	7	`				
size	8x40					
Stage 2						
number	6					
elements	7					
size	8x40					
Total elements	126					
CIP per element, gal	9	normal fouling - per hydranautics				
Volume CIP	1134	gal				
adjustment for piping, etc.	20%					
Totol CIP volume	1400	gal				
Chemical qty	lbs per 100 gal	lbs per CIP	CIP/yr	lbs/yr	Cost/lb	Cost/yr
citric	17	238	12	2856	$ 4.00	$ 11,424.00
TSP	17	238	12	2856	$ 2.00	$ 5,712.00
HCl	0.47	6.58	12	78.96	$ 2.50	$ 197.40
NaOH	0.83	11.62	12	139.44	$ 2.50	$ 348.60
Sodium Metabisulfite	8.5	119	12	1428	$ 5.00	$ 7,140.00
					Total	$ 24,822.00

Criteria 1 = least desirable 5 = most desirable	Conventional – Enhanced Coagulation (Tonka)	Conventional – Enhanced Coagulation – GAC (Roberts)	DAF-Conventional - Nanofiltration (Corix)	Immersed Membrane (Ultrafiltration) (GE Zbox)	Membrane (Microfiltration) (Pall)	MF/NF	Weight 1 = least important 5 = most important
MONETARY							
Capital Cost	$10,850,000	$9,340,000	$11,170,000	$10,960,000	$9,490,000	$9,290,000	
Operation and Maintenance Cost	$ 527,400	$ 783,500	$ 575,122	$ 500,022	$ 519,022	$ 520,833	
Present Worth	$23,083,000	$27,077,000	$24,435,000	$22,398,000	$21,530,000	$ 21,179,000	
	4	5	3	4	5	5	
	5	3	4	5	5	5	
	3	2	3	4	5	5	
NON-MONETARY							
Meet Current/Proposed Regulations	1	2	5	4	4	5	5
Meet Possible Future Regulations	1	2	5	3	3	5	4
Water Quality / Public Health	1	2	5	4	4	5	4
Process Reliability	5	5	4	4	4	4	5
Maintenance Requirements	2	2	3	3	3	3	5
Ease of Operation	2	2	3	3	3	3	4
Ease of Expansion	1	1	4	4	4	4	4
Certification Requirements	2	2	1	3	3	3	2
Viability to Construct	4	5	5	5	5	5	5
NON-MONETARY-Weighted							
Meet Current/Proposed Regulations	5	10	25	20	20	25	
Meet Possible Future Regulations	4	8	20	12	12	20	
Water Quality / Public Health	4	8	20	16	16	20	
Process Reliability	25	25	20	20	20	20	
Maintenance Requirements	10	10	15	15	15	15	
Ease of Operation	8	8	12	12	12	12	
Ease of Expansion	4	4	16	16	16	16	
Certification Requirements	4	4	2	6	6	6	
Viability to Construct	20	25	25	25	25	25	

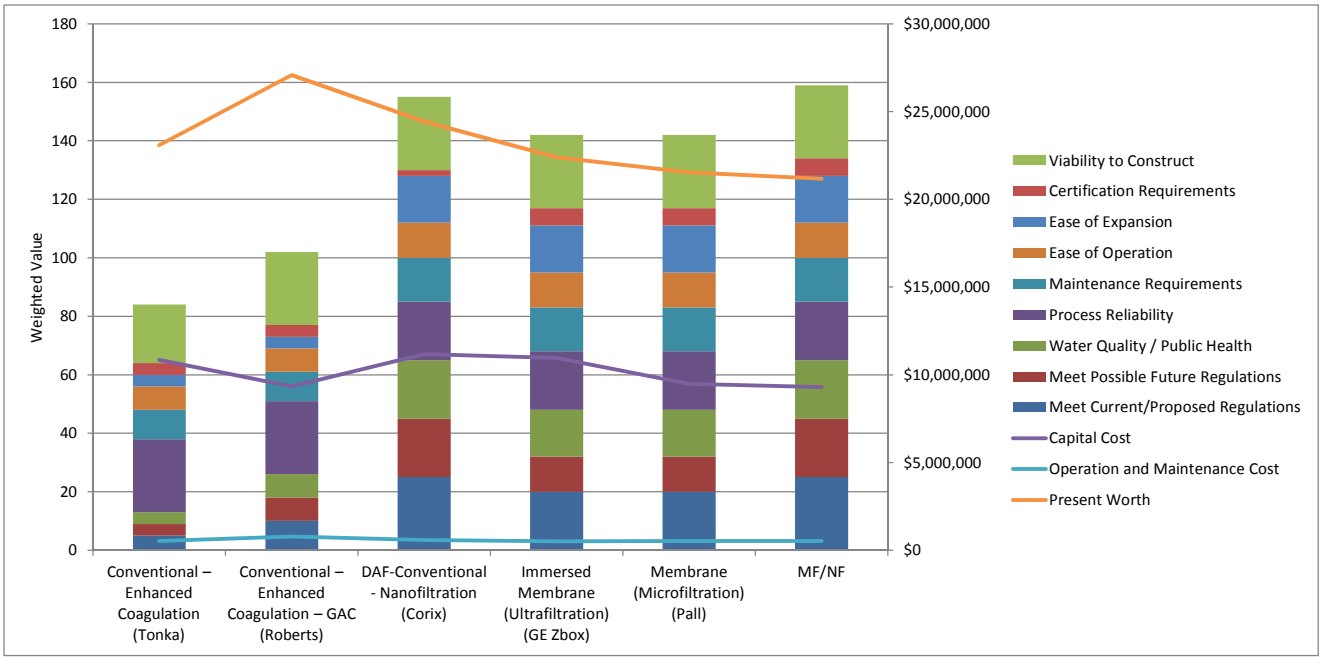

APPENDIX E

MANUFACTURERS' PROPOSALS

TONKA EQUIPMENT COMPANY

P.O. Box 41126
13305 Watertower Circle
Plymouth, Minnesota 55441

Ph: (763) 55-WATER
Ph: (763) 559-2837
Fax: (763) 559-1979

September 20, 2010

Daniel H. Schubert, P.E.
GV Jones & Associates, Inc.
1200 E. 76th Ave. Suite 1207
Anchorage, AK 99518

RE: Kotzebue Water Treatment

Dear Mr. Schubert:

In accordance with our understanding of the above project, Tonka Equipment is pleased to provide information concerning the following process equipment.

For this application, Tonka equipment is proposing its Unitized Treatment System (UTS). The UTS system is a packaged water treatment system that incorporates flocculation, up-flow tube settling and filtration. The filtration system includes Tonka's Simul-Wash™ simultaneous air/water backwash system, which provides superior media cleansing and reduced backwash waste volumes. The UTS units are designed with 30 minutes detention in the floc chamber, a hydraulic loading rate of 2 gpm/ sf in the tube settling chamber, and 3.0 gpm/sf in the filter. Each unit is designed for a 125gpm flow for a total system flow of 250 gpm. Included with this UTS system are the following:

- Two (2) 10' width x 17' length x 10' height carbon steel UTS tanks including:
  - Stairway and catwalk with handrail and kickplate
  - Variable speed paddle wheel floc drive system
  - Tube settlers (factory installed) and automatic sludge blow-down system
  - All unit function valves – Bray electric BFV
  - Airwash blower and header lateral grid
  - Tonka ABS nozzles support gravels and dual-media
  - Fully automatic PLC controls and panel
  - Turbidimeters (one common influent and one for each train effluent)
  - Services include freight to port of Seattle and start-up.

The budgetary price for this system is $ 482,000.00

We look forward to working with you on this water treatment project. If you have any questions, please feel free to call me at (763) 559-2837.

Sincerely,

Alan Schneider

Cc: Dean Brown, TMG Services

ALL RIGHTS TO MANUFACTURE, COPY, REPRODUCE OR DISPOSE OF THIS DRAWING OR ITS CONTENTS ARE RESERVED UNLESS OTHERWISE SPECIFIED IN WRITING BY TONKA EQUIPMENT COMPANY

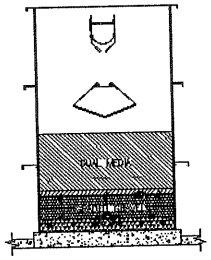

TYPICAL FILTER SECTION

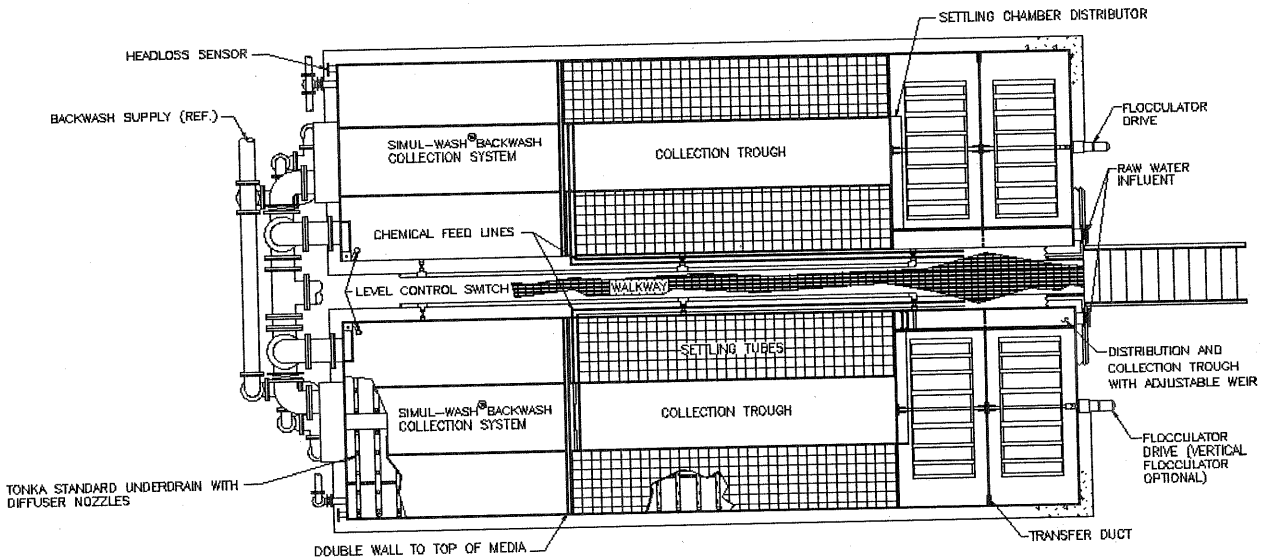

PLAN VIEW

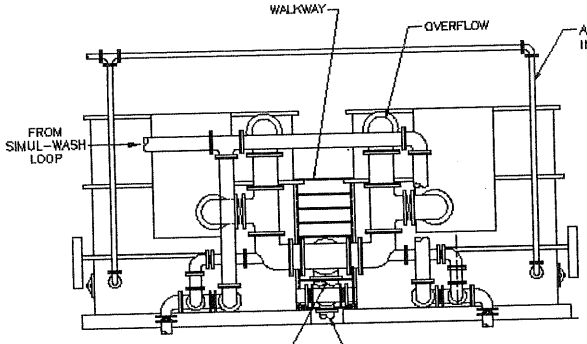

LEFT SIDE ELEVATION

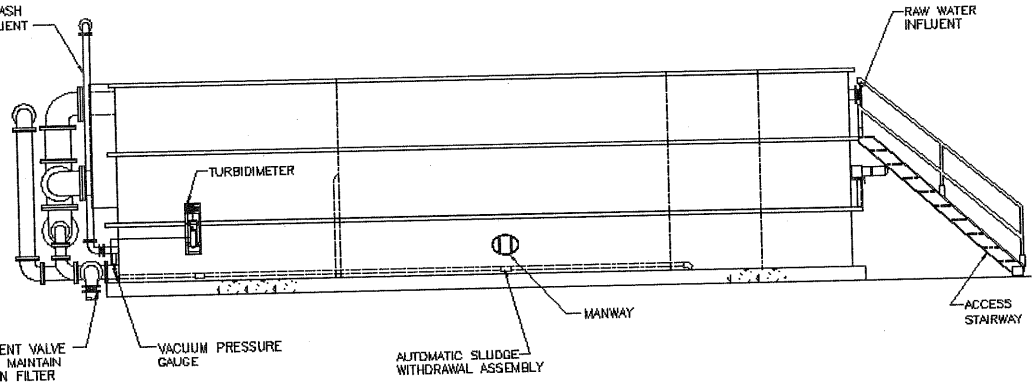

FRONT ELEVATION

DO NOT SCALE DWG.

#	DATE	APPR.
G		
F		
E		
D		
C		
B		
A	8/22/01	

TONKA WATER TREATMENT SYSTEMS

TONKA EQUIPMENT COMPANY

13305 WATERTOWER CIRCLE PLYMOUTH, MN 55441 • (763) 559-2837
P.O. BOX 41128 PLYMOUTH, MN 55441 FAX (763) 559-1276

UNITIZED TREATMENT SYSTEM - UTS

ENG. CATALOG #: EC1-12-D-1

DATE: 5/17/01

DRAWING NUMBER: T12-UTS-1

Roberts Water Technologies, Inc. *A Unit of the Roberts Filter Group*

PROVIDING SPECIALIZED PRODUCTS TO THE WATER AND WASTEWATER TREATMENT INDUSTRIES

Sixth and Columbia Avenue
P.O. Box 167
Darby, PA 19023
www.robertsfiltergroup.com
610-583-3131
fax 610-583-0117

September 24, 2010

GV Jones & Associates, Inc.
1200 E. 76th Ave., Suite 1207
Anchorage, AK 99518

Attention: Mr. Daniel H. Schubert, P.E.

Reference: City of Kotzebue WTP

Subject: Roberts' Budget Proposal BP – MG10-1111-T

Dear Mr. Schubert:

We are pleased to present Roberts' budget proposal for furnishing one (1) PACER II® water treatment unit for the City of Kotzebue Treatment Plant as follows. Installation of all equipment and materials proposed shall be by others. The project proposed consists of ONE PACER II® MODEL P-700DSAI WATER TREATMENT UNIT (IN PAINTED STEEL) WITH NOTED ACCESSORIES FOR A TOTAL PLANT PRODUCTION RATE OF 500 GPM.

Scope of Work

1. One (1) Roberts' modular PACER II® Model P-700DSAI tank with CONTACLARIFIER® internals and media plus filter internals including INFINITY® continuous trilateral underdrain and ARIES® removable air scour system and media. Tank construction shall be of ¼" carbon steel finished with NSF-61 epoxy paint internally, with a primed exterior except for tank bottom which is bare. Production rate of the unit is 500 GPM (532 GPM raw water rate) with the clarifier and the filter

operating at a rate of 6.08 GPM/SF and 3.03 GPM/SF respectively. Please see attached sales drawing S208-M1 for dimensions, tank and operating weight.

2. One (1) 8" PVC inline static mixer.

3. One (1) Influent flow control loop with 8" meter and controller.

4. One (1) Lot electrically operated wafer butterfly valves for each unit.

5. One (1) Lot manually operated influent and BW rate wafer butterfly valves.

6. One (1) Roberts Electronic filter level controller for effluent flow control.

7. One (1) Lots Clarifier and Filter head switch assemblies with gauges.

8. One (1) Lots Filter level switch assembly for control and alarm functions.

9. One (1) Lot Dual blower set up with alarm switch (25 HP).

10. One (1) Lot Raw water turbidimeter with sample solenoid.

11. One (1) Lots Effluent turbidimeter with sample pump.

12. One (1) Streaming Current Monitor with Sample Solenoid.

13. One (1) PLC based control Master Panel with SCM Coagulant Controller ™, Operator Interface and One (1) PID influent flow controller.

14. One (1) Acid chemical feed system to feed liquid HCL or H2SO4 with pump, shelf & calibration unit for feeding from Drum or Tote.

15. One (1) Coagulant chemical feed system to feed liquid FeCl3 with pump, shelf & calibration unit for feeding from Drum or Tote.

16. One (1) Caustic Chemical feed system for Post Caustic feed with pump, shelf & calibration unit plus a mixer, stand & drum.

17. One (1) NaMnO4 chemical feed system to feed liquid sodium permanganate with pump, shelf & calibration unit for feeding from customer Drum.

18. One (1) Chemical feed system for Polymer with pump, shelf & calibration unit plus mixer, stand & drum.

19. Two (2) Hypochlorite chemical feed systems for pre & post feeding of liquid sodium hypochlorite each with pump, shelf & calibration unit for feeding from a single customer Drum.

20. One (1) Fluoride chemical feed system with pump, shelf & calibration unit plus fluoride saturator drum.

21. One (1) Lot Freight to Port of Seattle, WA for all equipment and media.

22. One (1) Lot normal start-up and operator training services.

Items not included:

Exterior finish paint, concrete work, slab coating to put under the units, backwash pumps, motor starters, catwalk systems, face piping or pneumatic piping, chemical bulk storage or transfer equipment or installation labor.

Budget Pricing:

Total for one PACER II® Model P-700DSAI Water Treatment Unit:

(Three Hundred Seventy Thousand Dollars) $ 370,000

Comments:

1. This unit requires a backwash volume of 2810 GPM (16 GPM/SF) for 7-10 minutes at 30 ft. TDH at the backwash rate valve. Normal backwash is 7-8 minutes long. The Filter bed is made up of a multilayer gravel support base, 9" of silica sand and 21" of GAC. See Design Criteria for plant parameters.
2. Note that this tank has been equipped with sacrificial magnesium anodes for tank longevity.

3. Since we did not have raw water data (only ranges of values for various parameters) we have offered five (5) pre treatment chemical feed systems plus three post treatment systems. Our Coagulant Controller™ with SCM helps the PACER II® to quickly establish and fine tune the proper dose for achieving the effluent quality that the plant operator sets on the controls.
4. Since the clarifier washes with air and raw water, these de-rated units will need the influent rate to be increased from the normal 530 GPM flow to the full design rate of 700 GPM for the 6-7 minute clarifier wash cycle. Our Controls will handle this shift automatically so long as the raw water feed is capable of this increase, and will restore the 532 GPM flow after the wash..
5. Since we suspect that a treatability analysis of the raw water will show that the TOC can not be controlled with chemical feed alone, we have offered a unit with GAC replacing the normal anthracite on top of the filter. This GAC will need to be replace every 1-3 years depending on the water quality and amount of water treated.
6. In the way of backup components we have only offered a duplex blower setup with alternation (note M.S. by others) so far, but other items could be offered).
7. Price includes shipment to the Port of Seattle, WA, but does not include and special export crating.

Calculated Operating & Maintenance Cost Breakdown for Kotzebue, AK WTP With System Consisting of One (1) PACER II®P-700DSAI @ 532 GPM Total Flow

Chemical Treatment Regiment:

Our PACER II® system can treat waters with up to 100+ NTU turbidity, but since limited turbidity data was given for this water I have assumed an average raw water turbidity of 10 NTU. We have further assumed True Color of 8 units, iron at 2.5 ppm, manganese at 1.5 and pH of 8.0 as the average water needing treatment. It is clear from the data that at times the pH will be lower and at other times it will be higher (and we have provided chemical feeds to handle these situations), but this assumption shows the need for acid feed to remove TOC and post caustic feed for pH correction to prevent corrosion and therefore represents about the worst case. We have utilized the flocculent chemicals listed plus permanganate and hypochlorite as oxidants and hypochlorite to disinfect the water and fluoride at the doses as listed in the O & M cost section below to remove turbidity, TOC, Color, iron, manganese & bacteria to meet State treatment requirements. The PACER II® does not significantly change the hardness or dissolved solids content of the water.

Estimated Tank and Equipment Life & Replacement Costs.

Tankage life for the painted steel tank option is anticipated to be approx. 40 years with one internal blast and repaint at about 20 - 30 years plus exterior cleanup and repaint. Expected approx. cost for disassembly, repaint and reassembly is about $15,000/ unit in today's costs. Anode replacement cost is about $750/unit and should not be required more than about every 15 - 20 years.

Our PACER II® Blowers have a 20 to 30 yr. life with a replacement cost of about $8,000/ Ea. Blower inlet filter elements should be replaced about every 3-4 years in this light duty use at a cost of approx. $100 each which gives a yearly total cost of approx. $50 for both blowers. Valve parts and replacement costs should not run more than $50/year/unit. If our standard chemical pumps (Liquid Metronics, Inc. brand) were used they would have a life of 20 to 25 years with only minor parts replacements of about $20/yr. per pump.

The Control PLC and other electrical components have approx. a 20-25 year life except for the battery backup (cost $10). A replacement PLC would run about $2000 (there is one PLC in the control panel plus input and output boards & the HMI).

Estimated Media, Chemicals & Power O & M costs.

Media Replacement:

The media life is dependent on the water quality and the amount of backwashing one does. We typically find media life (as defined by when one would normally replace the entire bed) to be 20 years or more of service for the clarifier. There is no significant yearly media loss on this media so therefore no ongoing replacement cost. A complete bed for one unit would run about $2800 plus about $2500 in freight using today's costs. This gives a yearly per unit clarifier media replacement cost of about $265/unit.

The filter media also has a life of at least 20 - 30 years of service for the water we are talking about. The bed does often experience a loss of GAC media typically in the ½" to 1" maximum per year range. In your case we would expect you to be in the mid range of these numbers because of your relatively clean water. This translates to about 3/4"/yr. Or 11 cubic feet/ year/unit which would run about $4400 for 110 Cu. Ft. plus about $1000 in freight (if a 10 year supply was purchased at once). This filter also requires complete replacement of the GAC about every 1-3 years at a cost of $12,800 for 307 cubic feet of material plus about $2,500 in Frt. A complete replacement bed less the GAC would run about $2,600 plus about $3,000 in freight again at today's prices. This would give a yearly per unit filter media replacement cost of about $8414.

Power Usage:

Power used by the system: Regarding the total electrical demand see the following typical calculation. This calculation does not consider raw or finished water pumping costs, but is a total for one operating unit expressed as a total and a KWH/1000 gals treated. We have assumed a power cost of 10 cents per KWH to give daily power cost and a cost / 1000 gals treated.

PACER II® P-700DSAI Electrical Usage

Item	Electrical Usage	HP Hrs./Day
Raw water pumps	(Unknown)	=???
Clarifier Blower use	22.5 HP x 3 min./60 min. x 4/day	=4.5
Filter Blower use	22.5 HP x 3 min./60 min. x 1/day	=1.13
Electric Valves	0.1 HP x 1 Unit x 24 Hrs./day	=2.4
Controls & Instruments	0.05 HP Total x 24 hrs.	=1.2
7 Chemical Feeders	1/4 HP Total x 24 hrs.	=6.0
1 Chemical Mixers	1/3 HP x 1 x 5min./60min. x 1/day	=0.03
Finish water pumps	(Unknown)	=???
Total		15.26

This equals (15.26 x 0.7457) 15.38 KWH / 24 hr day or 0.0214 KWH / 1000 gals treated based on a flow of 532 gpm and a 94% production rate to allow for down time and wash water losses. With 10 cents /KWH and treating 720,115 GPD this would give a daily power cost of $1.54 ($0.0021/ 1000 gals treated) not counting raw or finished water pumping costs.

Chemical Usage:

Chemical usage: Assuming 532 GPM flow and worst case raw water as assumed above taken from the spec. we have the following approx. usage of chemicals when operating for a full 24 hour day. Note from the data that some times little or not acid may be needed if the raw pH is low.

Chemical	Dose(ppm)	#/day	Cost/#	Extension
HCL – 31%	15.0	94.9	$2.00	$189.8
FeCl3 *	15.0	94.9	$1.00	$94.90
NaMnO4	3.5	22.15	$2.50	$55.38
Caustic	10.0	63.27	$0.30	$18.98
Polymer	0.2	1.27	$2.00	$2.54
Sodium Hypochlorite**	4.0	25.31	$2.75	$69.60
			Total	$431.20

* Based on using liquid 50% @ $0.50/# ($1.00/# on dry Wt.)
** Pre Feed 2.5 ppm Oxidation & post feed 1.5 ppm Disinfection
Note: We have not figured the Fluoride costs since we do not know the dose or cost of this material.

With a 94% finished production rate we have 532 GPM X 0.94 X 1440 = 720,115 GPD at a cost of $431.20 which gives a chemical cost of $0.60/ 1000 gals based on the above chemical feed rate and cost assumptions.

Manpower Needs:

O & M manpower needs are approx. as follows if one assumes operation in the automatic mode.

Item of Work	Average Time/Day In Man-hours
Normal Operation of plants (includes plant & chem. Feed adjustments for major events)	1/2
Mixing Chemicals	1/2
Performing State Req. Water Tests (in plant)	¼
Doing State Req. Water Test Reports (in plant)	¼
Routine & Major maintenance (aver. over 1 yr.)	1/2
Total	2

No time is included for checking the clearwell, reservoir, raw water system, Chlorinator or other instruments or systems in the water plant not supplied by Roberts.

Waste Water Generated:

Waste Streams (Water used in clarifier washes & filter backwashes): With water of the normal quality reported for this site the PACER II® would typically get CONTACLARIFIER® runs of 5 to 7 hours and filter runs of 18-30 hours. Assuming 6 hour clarifier runs with each wash lasting 6 min. (3 min. with air/water and 3 min. with water only at the 700 GPM rate, each clarifier wash will then require 4200 gals of raw water / unit with each unit washing about 4 times per 24 hours of operation.

We typically recommend a backwash rate of 16 gpm/ SF for this unit, and the typical backwash requires about 7-8 minutes at this rate. This gives about 15-18 minute out of service which includes the drain down and air scour process as well. Thus we have a backwash waste stream of about 23,600 gals. every 24 hours / unit (21,075 Gals. BW + 2525 Gals. Draindown). Both wash water streams would average approx. 400 mg/l of solid waste. We therefore have a total waste stream of 40,400 gals / 24 day @ 400 mg/l from both the Clarifier and Filter. One also has the filter to waste stream of about 2,660 gallons/Unit of essentially clean water which could be recycled.

We thank you for the opportunity of submitting our budget proposal to you for your consideration. If you should have any questions please feel free to contact me

Sincerely Yours,
ROBERTS WATER TECHNOLOGIES, INC.

Mike Gregg

Mr. Mike Gregg
Regional Sales Manager

Attachment

MAG:gdr

CC: File

MODULAR PACER II® MODEL P-700DSAI
WITH ARIES® AND INFINITY® UNDERDRAIN
DE-RATED TO 532 GPM WITH GAC DUAL MEDIA
DESIGN CRITERIA

			De-Rated to
Plant capacity	700	gpm	532 gpm
CONTACLARIFIER®			
Area	87.5	SF	
Bed volume	350	cu.ft.	
Hydraulic loading	8	gpm/SF	6.08
In-service/rinse rate (Note: 25 ft. TDH required at CONTACLARIFIER® inlet)	700	gpm	532/700
Air scour rate @ 7 cfm/SF	615	cfm	
Polishing Filter (PF)			
Area	175.5	SF	
Filtering rate	4	gpm/SF	3.03
Filter air scour system: Dual Roberts ARIES® Managed Air System in 304 S.S.			
Air scour rate: @ 2.5 cfm/SF.	440	cfm	
Backwash rate: @ 16 gpm/SF (**Note**: 30 ft. TDH required at the filter backwash inlet)	2,810	gpm	
Total Backwash Volume: 7.5 minutes	21,075	gals	

Dual media bed

Layer	Typical sizes	Depth
INFINITY® PVC Underdrain		6"
Silica gravel	(1½" x 3/4")	3"
Silica gravel	(3/4" x 3/8")	3"
Silica gravel	(3/8" x 3/16")	3"
Silica gravel	(3/16" x No. 10)	3"
Silica sand	0.35 - .45 mm E.S. u.c. 1.5	9"
GAC	8 x 30 Mesh GAC	21"
		Total 48"

MODULAR PACER II® MODEL P-700DSAI
WITH ARIES® AND INFINITY® UNDERDRAIN
DE-RATED TO 532 GPM WITH GAC DUAL MEDIA
DESIGN CRITERIA

			De-Rated to
Plant capacity	700	gpm	532 gpm
CONTACLARIFIER®			
Area	87.5	SF	
Bed volume	350	cu.ft.	
Hydraulic loading	8	gpm/SF	6.08
In-service/rinse rate (Note: 25 ft. TDH required at CONTACLARIFIER® inlet)	700	gpm	532/700
Air scour rate @ 7 cfm/SF	615	cfm	
Polishing Filter (PF)			
Area	175.5	SF	
Filtering rate	4	gpm/SF	3.03
Filter air scour system: Dual Roberts ARIES® Managed Air System in 304 S.S.			
Air scour rate: @ 2.5 cfm/SF.	440	cfm	
Backwash rate: @ 16 gpm/SF (**Note**: 30 ft. TDH required at the filter backwash inlet)	2,810	gpm	
Total Backwash Volume: 7.5 minutes	21,075	gals	

Dual media bed

Layer	Typical sizes	Depth
INFINITY® PVC Underdrain		6"
Silica gravel	(1½" x 3/4")	3"
Silica gravel	(3/4" x 3/8")	3"
Silica gravel	(3/8" x 3/16")	3"
Silica gravel	(3/16" x No. 10)	3"
Silica sand	0.35 - .45 mm E.S. u.c. 1.5	9"
GAC	8 x 30 Mesh GAC	21"
		Total 48"

corix
Water Systems

Unit 100, 20329 Logan Avenue
Langley, British Columbia
Canada, V3A 4L8

T 604.539.9399
TF604.539.9309
Toll Free 1.800.500.8855
www.corix.com

Budget Quotation

#

DATE:	August 27, 2010	**TIME:**	2:34 PM
TO:	**Daniel H. Schubert** GV Jones & Associates, Inc.	**PHONE:** **FAX:**	(907) 346-4123 (907) 346-4124
COPIES	Ric Tower, TEC	**PHONE:**	(503) 292-4690
FROM:	Andrew Stevano	**PHONE:** **FAX:**	(604) 539-9399 (604) 539-9309

Number of pages including this cover 36

Our Ref: 1002-0251

RE: Kotzebue WTP, 1) CWS-DAF-640-2, 2) CWS-NF-500

Thank you for the opportunity to present our ideas and pricing for your Kotzebue project.

This proposal anticipates that pre-treatment for Fe and Mn will continue in a similar manner to what was described as well as the post treatment for pH control, fluoride and hypochlorite. To remove organics, turbidity, color and algae we are proposing DAF with gravity filtration followed by nano-filtration (NF). The DAF plant will consist of two 50% trains and will utilize chemical dosing, mechanical flocculation, clarification by dissolved air flotation and rapid gravity filtration to treat ~640 gpm, 320 gpm each train. The DAF treatment will work effectively up to 100 NTU. To size the NF we have assumed a recovery of 80%. The NF will be one pre-wired skid producing 500 gpm, feed pumping and pre-filters will be separate.

These plants are factory assembled and tested and delivered complete with all required controls. Only on-site connections for the raw water feed, treated water discharge, wastewater discharge and power are required. Filter media will be shipped separately.

The following provides details, budget pricing and a concept layout.

Notes on further required information and recommendations:

- to properly design the NF skid and estimate recovery we will need full water data including physical properties, cations and anions, silica and Ba.
- To assist sizing the NF feed pumps we will need the reservoir height.
- We recommend piloting the DAF. DAF works best in cold water and is the most effective conventional system for removing color and organics and so would be worthwhile to see how well organics are removed which could determine the best choice for NF or GAC contactors for organics polishing. (Note: we are also able to provide GAC filters and have

several installations across western Canada. Let us know if you wish us to provide a proposal including GAC)

- We recommend piloting the NF. Hydranautics has several choices of NF membranes. One in particular was designed for color removal and if it provides satisfactory removal of organics it will save close to half of the pumping energy. It also has resistance to chlorine which will save us from have to de-chlorinate and will enable us to maintain a residual to prevent biological fouling. The product is called HydraCoRe.
- We have pilot equipment available on all the above processes. Let us know if you need a piloting proposal.
- Regarding NSF, all components will be NSF, and fabricated steel piping will be coated with NSF paint to AWWA C210 spec. but we cannot say the plant as a whole is NSF. Marine grade aluminum and 304ss are not NSF certified, but this has not been a problem in the past.

1) <u>Dissolved Air Flotation Clarifier and Filtration Package CWS-DAF-640-2</u>

Plant Type: Corix Water Systems-DAF-640-2

Two modules each rated at 320 USgpm (1744 m^3/day)

Each module comprises a static rapid mix system (Westfall), flocculator, DAF clarifier and one gravity filter.

Flocculation time:	17.2 mins total
DAF surface loading:	3.56 USgpm/ft^2 (8.69 m/hr)
Filter Surface loading:	3.56 USgpm/ft^2 (8.69 m/hr)

DAF Module.

- Tank dimensions (2):

Width	Height	Length
10 ft (3.05 m)	11 ft (3.35 m)	28 ft (7.62 m)

- Constructed of marine grade aluminum alloy offering corrosion free service and eliminating the need for painting and tank structure maintenance.
- Mechanical flocculation
  - ◊ Two stage system, with stilling well, designed to ensure minimal short circuiting
  - ◊ Variable speed drive/mixer and aluminum paddles for variable energy input and tapered flocculation

- DAF clarifier
  - ◊ Mechanical scraper float removal with adjustable speed and interval timer
  - ◊ Floor mounted effluent launders for even cell flow distribution
  - ◊ Hopper bottom with automatic desludge
- DAF recycle saturator skid comprising
  - ◊ Packed tower saturator
  - ◊ Duplex air compressor with receiver and alternating panel
  - ◊ 3 recycle pumps, 2 duty, 1 standby, VFDs
- One dual media, rapid gravity filter (each train)
  - ◊ Air/water backwash system
  - ◊ Automatic control valves for effluent, backwash, rinse, air scour

Air scour blower rated for 2.5 scfm/ft^2 at 3 psi

Backwash pump TEFC centrifugal, design point: 1350 gpm @ 45'

Access stairway, handrails, and walkways as indicated on sketch

Effluent pumping, TEFC centrifugal

12,000 gal HDPE tank for backwash storage and NF feed, c/w float switches

Chemical Systems

- Storage and dosing systems for the following chemicals. Each system would comprise a solution tank with powered mixer where necessary, injection ports, shelf mounted pre-plumbed dosing pump packages, pressure gauge, multifunction valve and calibration column.
  - ◊ Soda Ash/NaOH for pH control (1)
  - ◊ Alum as primary coagulant (1)
  - ◊ Hypochlorite solution for final disinfection (1)

Instrumentation Summary:

- ◊ Raw water turbidity (1)
- ◊ Filtered water turbidity (2)
- ◊ pH sensor/transmitter (1)
- ◊ Pressure transmitters/indicators (saturator skid, 1 per filter, 1 12,000 gal tank)
- ◊ Flow transmitters/indicators (2 inlet, 2 DAF recycle)
- ◊ Ultra-sonic level transmitter (2, 1 per filter)

PLC control system for fully automatic operation...Options for MCC Panels, SCADA systems, and Telemetry systems are available upon request. (Shares with NF unit)

14 days on-site time by trained Corix commissioning technician for final commissioning and staff training...additional days are at additional cost. (Does not include travel and living expenses)

O& M manuals / As-Built Drawings

Shipping, FOB Port of Seattle WA

corix
Water Systems

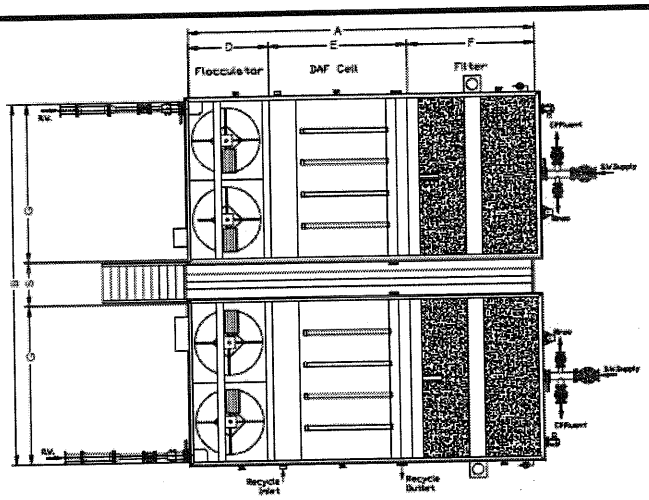

PLAN VIEW

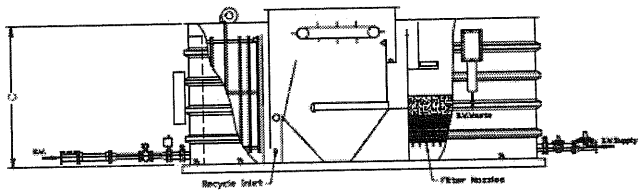

ELEVATION

Note: 610X305mm (24"x12") Inspection Ports

Treated Water Flow (each train)

USgpm 320

Weights (per train) (lb)

Shipping 9,683

Hydraulic Loading (USgpm/ft2)

DAF Cell	3.56	Backwash Rate	15.0
Filter	3.56	Air Scour Rate	2.5

Detention Time (minutes)

Flocculator	17.2
Clarifier	20.0
Filter	8.4
Total	45.6

This drawing provides preliminary details only. All details to be confirmed at time of ordering

Dim.	Ft	mm
A	28	8,534
B	23	7,010
C	11	3,353
D	7	2,133
E	12	3,657
F	9	2,743
G	10	3,048
S	3	914

Notes:

1. Tanks to be constructed of Aluminium alloy 5086-H116 or H32. All welds are continuous on both sides, where possible. The interior and exterior of the completed structure to be cleaned with "Zepalume" and Hydrostatically tested.
2. Drain Valves to be Brass with Stainless Steel nipples where connected to Aluminium.
3. Instrumentation piping to be soldered Copper dielectrically isolated from Aluminium.
4. Plastic or Bituminous coating on top of the slab to insulate the plant bottom from concrete (by others).
5. Final dimensions and component layout will depend upon individual plant requirements plus the location and number of the walkways (to be confirmed).
6. The illustration and information in this drawing are for information only.

corix
Water Systems

Kotzebue DAF-640-2

Ref No.: 1002-0251

Plant Type: CWS-DAF-640-2

Date: 27-Aug-10

Rev. 0

Water...
we treat it right

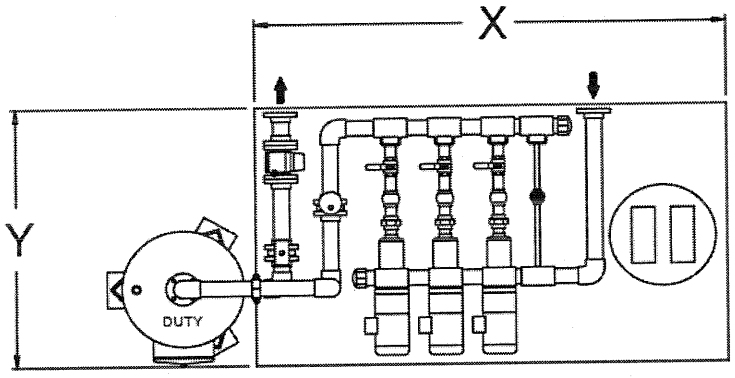

PLAN VIEW

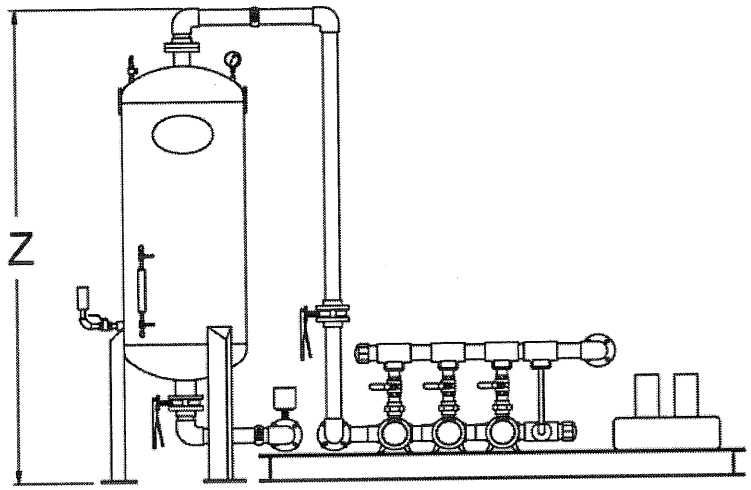

ELEVATION VIEW

This drawing provides preliminary details only.
All details to be confirmed at time of ordering

DESIGN SPECIFICATIONS

Skid Dimensions			Recycle System		
X	8	ft	Recycle %	12%	
Y	3	ft	Max Recycle Flo	77	usgpm
Z	9	ft	Pump Capacity	77	usgpm
d1	4.0	in.			
d2	4.0	in.			

corix
Water Systems

	Kotzebue DAF-640-2
Ref No.:	1002-0251
Plant Type:	CWS-DAF-640-2
Date:	27-Aug-10
Rev.	0

Water...
we treat it right

2) CWS-NF-500 Pre-Packaged NF

System comprises redundant 5 micron pre-filtration, redundant horizontal RO feed pumping, reverse osmosis/nano-filtration elements, clean in place (CIP) system and separate chemical dosing systems. It also includes a fully automatic control system.

Basic Design Parameters

Membrane Type:	Hydranautics' ESNA-LF2
# of trains:	1
Design flow:	500 gpm (113.6 m^3/hr)
Required Feed Flow:	625 gpm (142 m^3/hr)
By-pass flow for blending:	0 gpm
Recovery:	80% (assumed) in 1 pass with 2 stages
Overall Flux:	14.3 gfd

System Details

All equipment, other than chemical feed systems and CIP solution tanks is skid mounted on skids constructed of 304ss/epoxy coated steel.

- NF Skid dimensions (1):

Width	Height	Length
4 ft (1.219 m)	9 ft (2.74)	25 ft – 6in (7.77 m)

- Feed pumping
  - ◊ Two 5 Micron pre-filter, 100% redundant, sized for 625 GPM @ less than 5 psi head-loss with clean filter.
  - ◊ PVC and 304SS pipework
  - ◊ 2 feed pumps, horizontal split case, 100% redundant, DP 625 gpm @ 230 psi, VFDs by others.
  - ◊ Check and isolations valves
  - ◊ Raw water conductivity meter
- RO System Comprises :
  - ◊ Feed water flow meter with panel indication.
  - ◊ Pressure safety valve, temperature and pH transmitter.

- ◊ 1 pass membrane array as detailed below, employing Hydranautics' ESNA-LF2 membranes.
  Stage 1 – 12 FRP vessels, with 7, 8" x 40" membranes elements
  Stage 2 – 6 FRP vessels, with 7, 8" x 40" membrane elements
- ◊ Manual throttling valve for concentrate to waste
- ◊ Stage 1 permeate throttling
- ◊ Direct reading rotameter for each concentrate and permeate stream.
- ◊ Permeate discharge check valve.
- ◊ Automatic purge control and solenoid valve.

- CIP system, one only, skid mounted except for HDPE tanks
  - ◊ 5 micron pre-filter and flow meter
  - ◊ One CIP pump, 288 gpm @ 65 psi
  - ◊ Associated piping and valves
  - ◊ CIP chemical preparation tank (1500 gal) with heater (not on skid)
  - ◊ CIP waste collection tank (2500 gal), (not on skid)
- Instrumentation summary
  - ◊ Feed
    - ◊ Pressure, Pressure transducer and indicator
    - ◊ pH, sensor/transmitter
    - ◊ Flow, Magnetic flow meter
    - ◊ ORP, sensor/transmitter
    - ◊ Conductivity. Myron Conductivity transmitter
  - ◊ Permeate
    - ◊ Pressure, Pressure indicator
    - ◊ pH, sensor/transmitter
    - ◊ Flow, rotameters only
    - ◊ Conductivity. Myron Conductivity transmitter
  - ◊ Concentrate
    - ◊ Pressure, Pressure indicator
    - ◊ Waste Flow. Magnetic flow meter
- Chemical Systems
  Storage and dosing systems for the following chemicals. Each system would comprise a solution tank with powered mixer if necessary, dosing pump, calibration columns and injection ports, pre-plumbed on fabricated aluminum stand.
  - ◊ Sodium bi-sulfate for oxidation neutralization
  - ◊ Anti-scalent
  - ◊ Acid or NaOH for pH balancing

- Junction Box
- PLC to share with DAF plant, for fully automatic operation (Allen Bradley MicroLogix with Panelview 550 HMI) Options for MCC Panels, SCADA systems, and Telemetry systems are available upon request.
- Shipping, FOB Port of Seattle

2 trips, 16 days on-site time by trained Corix commissioning technician for final commissioning and staff training…additional days are at additional cost.

O& M manuals / As-Built Drawings

1) Budget Price: $471,000.00 excluding all applicable taxes

2) Budget Price $US: $522,000.00 excluding all applicable taxes…

Delivery can usually be made within 11 - 13 weeks following approval of final shop drawings.

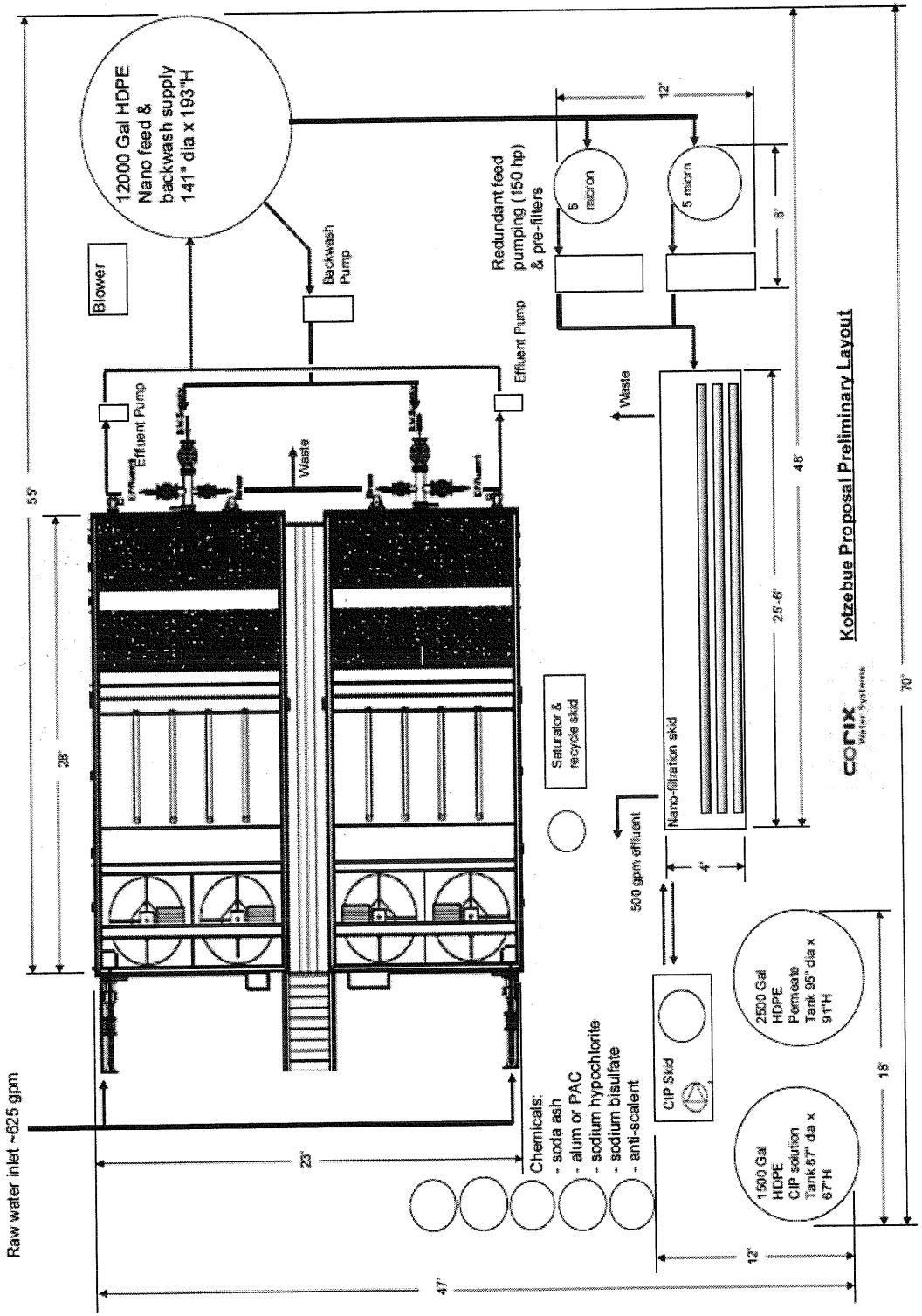
12000 Gal HDPE
Nano feed &
backwash supply
141" dia x 193"H
Blower
Backwash
Pump
Redundant feed
pumping (150 hp)
& pre-filters
5
micron
5 micron
12'
8'
Effluent Pump
Effluent Pump
Waste
Waste
55'
28'
48'
25'-6"
70'
Saturator &
recycle skid
Nano-filtration skid
500 gpm effluent
4'
Kotzebue Proposal Preliminary Layout
corix
Water Systems
2500 Gal
HDPE
Permeate
Tank 95" dia x
91"H
CIP Skid
1500 Gal
HDPE
CIP solution
Tank 87" dia x
67"H
18'
12'
Raw water inlet ~625 gpm
23'
Chemicals:
- soda ash
- alum or PAC
- sodium hypochlorite
- sodium bisulfate
- anti-scalent
47'

THIS PRICE ESTIMATE DOES NOT INCLUDE:

- Any applicable taxes
- Receiving, unloading and suitable storage of material
- Concrete foundation pads
- Field erection of treatment plant and equipment, labor and supervision
- Piping connections, influent and effluent piping, rinse and backwash piping, yard piping, drain piping, interconnecting piping or other piping outside the plant structure
- Field electrical wiring and conduit
- Base meter, split trough, disconnect switches, transformer, if required, are not included
- Field paint or painting labor
- General cleaning of plant
- Installation of chemical feed systems
- Starters and VFDs unless mentioned

Corix Water Systems and its predecessor companies has engineered over 400 similar plants since 1965 and we value the opportunity to work with engineers and the plant owners and operators to develop concepts and final designs so that the final product provides the most cost effective and efficient solution. For more information on our Company and our range of products and services visit our web site at www.corix.com.

I trust this meets your needs and will be pleased to provide any further information you may require.

Regards

Andrew Stevano
Water and Wastewater Engineer

E-mail – andrew.stevano@corix.com

Attachments:

Appendix A:	DAF Process Description
Appendix B:	Corix Corporate Profile
Appendix C:	Operation Costs
Appendix D:	DAF & Membrane References

Appendix A

DAF Process Description

PROCESS DESCRIPTION - "DAF" Dissolved Air Flotation/Filtration

Flash Mixing - Raw water enters the plant train through a flow meter and rate of flow valve. Chemicals, alum, polymer and soda ash (and potassium permanganate if necessary) are injected into a flash mix chamber with powered mixer. Alternatively an injection spool and static mixer can be employed. . All chemical rates are paced to flow. Automatic pH control is available as an option, by varying the soda ash dose based on a signal from a coagulated water pH sensor.

Flocculation - DAF requires a high level of energy input during flocculation and for this reason a multi-stage mechanical flocculator is provided. Each stage is equipped with a variable speed paddle. This provides good adjustment and selection of energy input and also provides for tapered flocculation. Flocculator paddle speeds are manually set from the plant control panel.

Dissolved Air Flotation Clarifier -The flocculated water enters the inlet contact zone of the dissolved air flotation cell at a low level. Here, microscopic air bubbles of approximately 50 microns in diameter are introduced which attach to the flocc particles rendering them buoyant. The contact zone is bounded by an inclined baffle which ensures good contact and eliminates the potential for denser layers of unaerated water to pass back to the air inlet zone. As the flow passes over the top of the inlet baffle the buoyant flocc particles rise to the surface and form a floating sludge layer. Clarified water is collected from the floor of the cell through a submerged perforated pipe. This ensures good even flow distribution throughout the cell and avoids the potential for detrimental circulation currents.

The floating sludge layer is periodically removed by a mechanical surface skimmer This offers the advantage of low waste flows and a dense float. The skimmer again controlled automatically with adjustable speed, duration and interval timers.

To generate the microscopic air bubbles approximately 6-10% of the clarified water is pumped through a packed tower saturator. One saturator is provided for each DAF train. The water is sprayed into the top of the saturator and flows downwards over exposed Raschig ring packing. Compressed air is also introduced into the top of the saturator and the air space pressure maintained at between 40 and 60 psi. As the water passes downwards it becomes fully saturated with air and then collects in a pool at the foot of the saturator. The level of this pool is sensed and controlled by modulating the flow from the recycle pumps.

The fully saturated water passes to the DAF cell and flows into an injection manifold containing fixed orifice nozzles. These cause a sudden release of pressure and the formerly dissolved air is released from solution in the form of microscopic bubbles. Careful design and orientation of the inlet nozzles eliminate the potential for turbulent recycle flows to damage the incoming flocc.

Duty and standby recycle pumps are provided. The saturator is fitted with pressure relief valve, level sight glass, access flange and a spring loaded outlet valve to ensure the saturator remains charged in the event of power failure. The entire recycle pump and saturator system is pre fabricated and skid mounted prior to shipment.

Filtration - From the clarifier section water flows to the top of the filter section and is filtered through two mixed media filters. The media comprises:

450 mm	1.0 mm anthracite
450 mm	0.45-0.55 mm sand

The filtered water is collected through an array of Orthos slotted Polypropylene nozzles. Modulating control effluent and rinse valves with an ultra-sonic level sensor maintain a constant level in each filter. A pressure switch provides indication that total headloss has exceeded the maximum acceptable level and that backwashing is required. This indication is also initiated through high filtered water turbidity, which is constantly monitored by an on-line Hach turbidimeter on each filter or by elapsed run time. The backwash sequence includes air scour. A flow control valve modulates the backwash flow and provides for two separate backwash rates during the backwash cycle. These rates are established during start up but are normally in the range of 6-12 USgpm/ft^2 and 12-16 USgpm/ft^2. Dirty backwash water flows from surface launders to the waste lagoons. Flap valves or butterfly valves fitted to the filter inlets prevent backwash flow passing back into the clarifier.

Following completion of the backwash cycle the filter is run to waste through a waste line fitted with a control valve. The filter gradually matures and effluent turbidity falls to acceptable levels. After a preset time interval the rinse to waste valve closes, the effluent valve opens and the filter returns to normal service.

The full backwashing sequence can be both initiated and controlled either manually or automatically. Automatic operation is through a PLC controller with sequence times easily adjustable by the plant operator.

Appendix B

Corix Corporate Profile

CORIX CORPORATE INFORMATION

OVERVIEW OF CORIX

Corix

The Corix group of companies is a privately held Canadian company specializing in utility infrastructure. Corix and its related subsidiaries are a fully-integrated water and utility services group of companies that provide water and wastewater treatment; water distribution and wastewater collection; energy system installation, operation and management, meter reading; meter fleet management and installation services together with associated billing, collection and utility management services; water product supplies, contract O&M services and asset management/concessions/ownership to small and medium sized communities and municipalities

Our name stands for: "**Cor**" - for core utility services; "**i**" - for infrastructure; "**x**" - for systems.

The major shareholders in Corix are CAI Management Co. and BC Investment Management Corporation, large and stable members of the investment community with substantial investment holdings in Canada and the United States. Operating under such strong investors with combined assets in excess of $65 billion, Corix Utilities has the stability and backing needed to operate and grow the business across North America as well as the scale, resources and capital to execute on established strategy, build on past successes and react to market opportunities in a dynamic manner.

CAI Capital Management Co. ("CAI") is a private equity firm founded in 1989 to make investments in North American companies. CAI is currently investing CAI Fund III, a $375 million fund that was closed in September 2003. Including CAI Fund III and co-investments with its limited partners, CAI will have invested over $1 billion in private equity situations since 1990. With offices in New York, Montreal, Toronto and Vancouver, approximately 80% of CAI's funding is derived from Canadian sourced pension funds and financial institutions. For more information please visit www.caifunds.com.

BC Investment Management Corporation ("BCIMC") provides professional funds management services for public bodies and publicly administered trust funds. Public sector pension plans constitute BCIMC's largest client group and account for 73.8 percent of its $67.3 billion in assets under administration. BCIMC's clients include public sector pension plans, the Province of British Columbia, provincial government bodies (Crown corporations and institutions) and publicly administered trust funds. BCIMC manages more than 50 pooled investment funds in eight major asset classes. Its investment activities help to finance the retirement benefits of more than 350,000 residents of British Columbia, including college instructors and staff, municipal and healthcare workers, fire-fighters, police officers, public servants and teachers. For more information please visit www.bcimc.com.

Headquartered in Vancouver, Corix has over 1000 employees dedicated to utility and infrastructure services. With more than 65 years of experience, Corix has a successful track record of providing cost-effective, safe and efficient utility solutions for municipalities, First Nations, resort communities/ properties, institutions, builders, developers and water and energy (gas, geothermal and electricity) utilities in Canada and the United States.

Corix delivers a range of services including water and wastewater systems, multi-utility distribution system operations, geo-exchange, district heating, and metering for water, gas,

hydronic and electricity across North America. Corix customers include municipalities, resort properties, First Nations, gas, water and electric utilities, co-operatives, housing subdivisions and institutions.

In BC, Corix owns and operates multi-utility services in Panorama, Sun Rivers and Sonoma Pines, has an investment in and operates the Lonsdale district energy system in North Vancouver, and has a long term contract to own, operate and expand the City of Langford wastewater system. In addition to these operations, Corix has both regulated and non-regulated utility operations throughout Western Canada, Ontario and the US, totaling in excess of 100 utility systems.

Corix Utilities offers its customers a very flexible and comprehensive selection of services to meet a wide range of utility needs, including:

- Complete design, build, own, operate and maintenance services
- Project financing
- Water and sewer utility services and supplies
- Specialist utility services (rate design, system analysis, public relations and marketing)
- Meter management services (AMR applications, database management, water/electric meter supply and install, water/gas/electric meter reading, testing and repair)
- Customer Care Services (billing, call handling, credit/collection and payment processing)

Corix has extensive experience in the designing, building and operation of energy, water and wastewater treatment systems and employs the largest private team of certified water and wastewater operators in Western Canada. The combination of in-house management capabilities, financial resources, and operations and maintenance expertise guarantees our capabilities to find the best solution for each client to meet its energy, water, wastewater and multi-utility needs.

CORIX CORPORATE PROFILE

Background Experience

Corix Utilities Inc. motto is **"Creating Solutions, Building Partnerships".** This phrase captures the corporate philosophy of the Corix Group of Companies and its associated partners, joint ventures and partners. ***By working together to find creative solutions, a team of motivated people can make the difference in a community.*** Corix has, over the years brought together many different aspects of the water business to provide a uniquely positioned water products and utility services company in Canada. ***Our vision is to be recognized as the trusted utility partner that will deliver fully integrated customer solutions in a responsive and practical manner.***
Corix group of companies has more that 65 years of experience in all aspects of water and wastewater business, employs over 900 people and will achieve annualized revenues of approximately $400 million in 2009. In Canada, we employ over 56 certified and qualified environmental operators and technicians in water and wastewater treatment plants and collection and distribution systems. These personnel are complemented by Professional Engineers and Specialists in the fields of Potable Water, Wastewater, Water Analysis and Laboratory Testing and Analysis.

KEY SUBSIDIARY – CORIX UTILITIES

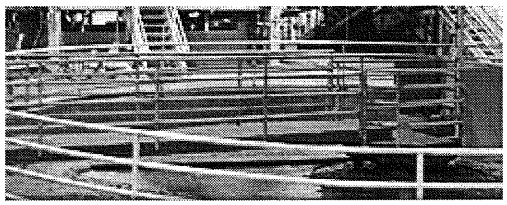

Corix Utilities focuses on the cost effective delivery of water and wastewater services to small and medium sized municipalities and/or planned communities. We have developed a fully integrated approach to the provision of services, creating partnerships with local operator, sub-contractors and suppliers and supporting these operations with national financial and technical capacity, a full range of product and services to support operations, a technology platform and a comprehensive governance system.

Representative Projects

The following utility operations represent a cross section of the large, medium and small rural water systems operated by Corix Utilities. These systems show a cross section of treatment technologies as well as a breadth of systems operated.

	Facility	*Description*	*Type*	*Class level and population served*
1	**City of Langford,** BC	Wastewater Collection (installation, operation and maintenance of 74 Km of sewer line and 15 lift stations) with addition of 5 km of new sewer per year. Municipality has option to include water distribution system.	21 yr + 21 yr franchise	Level II, serving 9,600 people and 19,200 people by 2010
2	**Sun Rivers** Community, BC	Multi-Utility system covering water distribution, wastewater collection, geothermal, electric and gas distribution and customer billing/customer care .	114 year franchise	Level I, serving 5,000
3	**Panorama Mountain** Village, BC	Level III Water Treatment Plant (Surface water influence using UV disinfection) Level II Wastewater Treatment Plant (Rotating biological contactor, sand filtration, sludge digestion and ground/river discharge), $3.5 million invested to built a membrane treatment (2004). New water reservoir upgrade (2005). Water Distribution, Wastewater Collection systems	Owner/ Operator	Level III, serving 5,000 people and 7,000 by 2011
4	**Thornmark Utilities**, AB	Water Treatment, Water Distribution, Wastewater Collection and Wastewater Treatment. Water Treatment via DAF and chlorination, 20 km of distribution and collection, Zenon membrane WWTP with UV disinfection and river discharge, 94 manholes and 3 lift stations.	Owner, Regulated Utility	Level III, serving 1,500 people and 9,120 by 2008
5	**Glencoe/Stonepine,** AB	Design-Build and Operate the Water Treatment (include chemical pre-treatment and rapid mixing prior to filtration, a final polishing filter. and a de-chlorination process), Water Distribution System.	Ongoing Contract O&M	Level II, serving 350 people
6	**Nexen Long Lake,** AB	Water Treatment Plant (Deep well influence, Membrane treatment from Life Stream.	Contract O&M to	Level II WTP Level II 2x

	Facility	*Description*	*Type*	*Class level and population served*
		Chlorine residual is used to help disinfect the system). Wastewater Treatment using extended aeration, UV disinfection with discharge to lake), Distribution System and Collection System. Water Distribution, Wastewater Collection serving a new community in the RM Wood Buffalo.	2010	WTPs, serving 3,000 - 5,000 people
7	**Riverport** Community, BC	Wastewater collection system and Sequenced Batch Reactor Wastewater Treatment, with River outfall	Owner/ Operator	Level II, serving 3,200 people
8	**Swan-e-Set Bay**, BC	Wastewater Treatment Plant (Extended Aeration with nitrogen reduction, sand filter with UV disinfection and sludge digestion). Water Distribution, Wastewater Collection Tertiary Upgrade in 1996	Contract O&M Ongoing	Level IV, serving 1,500 people
9	**Anmore Green** Estates, BC	Waste Water Treatment Plant and Collection System – (Rotating biological contactor) includes sand filtration and ground discharge	Contract O&M Ongoing	Level II
10	**Caravan West,** Scotch Creek, BC	Wastewater Treatment Plant- (Extended Aeration with discharge to a lake).	Contract O&M	Level II
11	**Ruskin Place** Maple Ridge, BC	Wastewater Treatment Plant (Extended Aeration, with sludge digestion, UV disinfection and river outfall) and Collection System	Contract O&M Ongoing	Level II
12	**Poplar View Water** Co-operative Ltd., AB	Water treatment plant and distribution system. Surface water supply from a pump station on the Bow River via 3Km of raw water. Water treatment with a Corix Utilities Water ST-E-200 process.	Contract O&M Ongoing	Level II Rural community of 500 people (200+ homes)
13	**Wintergreen Woods** Water Ltd. Bragg Creek AB	Currently being upgraded to a Level II process using a Corix Utilities ST-80 process from the former 4 multi media pressure filters.	Contract O&M Ongoing	Level II
14	**MD Rocky View** Elbow Valley Sewage, AB	Operation of 6 Lift Stations and Maintenance of 23 Km of Sewer Line	Contract O&M Ongoing	Level I
15	**Furry Creek** Community, BC	Wastewater Treatment Plant (Extended Aeration with nitrogen reduction and sludge digestion disinfection using UV). Water Distribution, Wastewater Collection and	Contract O&M Ongoing	Level II, serving 1,033 people

	Facility	Description	Type	Class level and population served
		Wastewater Treatment. WWTP expanded and converted to SBR.		
16	**Emerald Bay Water** & Sewer System, AB	Water Treatment, Water Distribution, Wastewater Collection and Wastewater Treatment. Contract value: $140,000 pa.	Contract O&M Ongoing	Level I Water, Level II Wastewater, rural community of 655 people
17	**Golden Heart** Utilities, AK	Water services through state-of-the art Level III Water Treatment Plant (Surface influenced using Chlorine residual for disinfection). Level II Wastewater Treatment Plant (activated sludge secondary treatment plant, using enriched oxygen with windrow biosolids composting), Distribution System (150 miles) and Collection System (108 miles), lift stations (57). Water Mains 148.9 miles Pump Stations 15 Fire Hydrants 1463 Sewer Manholes 1740 manholes, Sewer Cleanouts 357 Sewer Mains Gravity 107.2 miles, Force 1.1 miles Lift Stations 57	Owner of Regulated Utility	Level III, 56,000 population served in community of 82,000
18	**College Utilities**, AK	Water Distribution and Wastewater collection Water Mains 68.7 miles Pump Stations 9 Fire Hydrants 449 Sewer Manholes 724 manholes Sewer Cleanouts 238 Sewer Mains Gravity 40.4 miles, Force 10.6 miles Lift Stations 29	Owner of Regulated Utility	Level II, 56,000 population served in community of 82,000

Operator Training and Certification

Corix operators are all certified with the appropriate provincial certification authority. We strongly believe in and support the Certification organizations such as the Environmental Operators Certification Program (EOCP) here in British Columbia. It is a core corporate

mandate to strongly encourage employees to seek further training and experience and upgrade their certifications.

With strong associations with the British Columbia Water and Wastewater Association and EOCP Corix is very familiar with the training programs available and the certification requirements for operators. As part of this FN oversite initiative, we are able to closely integrate and facilitate the services provided by these to organizations into the oversite project. Corix operators will also be able to assist local operators in better understanding the requirements and

principles of water operations. We will also be able to assist in customizing training and examining program to more efficiently meet the needs of the FN operators who often are located in remote communities.

Utilizing SuperLog and Asset Management Package

One of the issues that the First Nations needs to address is the growing sophistication and complexity of the systems being installed at the remote sites and a plan on how to keep operators up to date with training and maintenance requirements in order to reduce the liability risk, emergency incidents and unnecessary capital expenditures. By utilizing a Corix's remote web based log book, "SuperLog" and elements of modern asset management strategies, our team are in a better position to assist the operations in the field and potentially identify issues before they arise. SuperLog and an asset management strategies are also tools that operators requiring further training, have as a resource to turn to for remote guidance and assistance and importantly for remote technical, financial and operational support teams to assist the operators and to identify and prioritize efforts in areas that require immediate attention.

Maintenance Strategy

Corix will implement proven approaches and strategies towards asset management that will be based on utilizing established procedures and systems that are focused on efficient assets utilization to maximize their life cycle and reduce overall capital and annual operation costs. The objectives of Corix strategy and asset protection plan is to safeguarding the First Nations investments, facilities, equipment and systems. By employing and implementing a Legacy System software package, Asset Management Package, Corix Supervisor(s) will be using a predictive, corrective and preventative maintenance software program designed to organize, trigger and record the maintenance activities that extend the performance, reliability, efficiency of First Nations utilities.

We will provide proven, cost effective solutions utilizing established but customized procedures that increase performance and ensure the provision of reliable and compliant services that are focused on reducing costs and maximizing the useful life and efficient utilization of each asset in the future.

Corix Utilities has established and maintains a vigorous set of Health, Safety and Environmental standards, policies and operating procedures which are compliant with ISO 14001:2004 and

OHSAS 18001:1999 standards and have been evaluated and audited by independent third parties.

Commissioning & Transition-In Experience

Over the 10 years, Corix has assumed responsibility for the operations of over 100 water utility systems in Western Canada and in Alaska. This has been achieved through either acquisition of systems, assumption of contract operations on existing systems and/or the construction and commissioning of new systems. Regardless of how the operational responsibility is assumed, Corix teams have developed substantial experience in asset condition assessment, the development of preventative maintenance plans, the introduction of information and data monitoring technology to these new systems as well as the development of the various plans and troubleshooting needs associated with commissioning and transition-in to operations.

KEY SUBSIDIARY – CORIX WATER PRODUCTS INC.

Corix Water Products

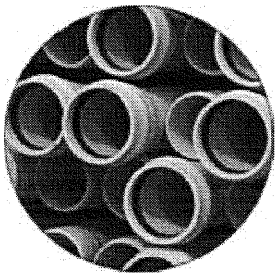

Corix Water Products maintain the largest single-source inventory of water, wastewater and irrigation supplies in Western Canada with over 30 years of history in the waterworks supply industry, Corix Waterworks distributes over $100 million in infrastructure products annually from its locations throughout British Columbia and Alberta. The 16 branch locations range from Vancouver Island to Edmonton, Alberta and delivers quality products to customers that include municipalities, golf courses, contractors, farmers and industrial sites. From pipe and valves to fire hydrants and irrigation equipment, Corix Waterworks maintains the largest single-source inventory of water and wastewater supplies in western Canada.

Our clients include municipalities, developers, golf courses, contractors, farmers and industrial users. This means that the community will have peace of mind knowing that the ***CU Team can provide water and wastewater supplies faster and more affordably***. This is important to manage project schedules and budget, to keep pace with development and importantly to promptly respond to emergencies and quickly implement any necessary repairs. We have established a long standing relationship with municipalities, developers and contractors.

KEY SUBSIDIARY – CORIX WATER SYSTEMS INC.

Corix Water Systems Inc. - Overview

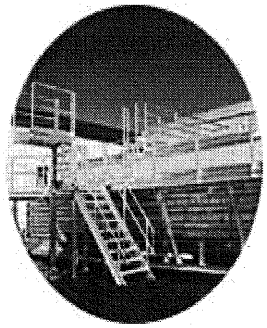

Corix Water offers cost-effective and flexible response to its clients needs ranging from equipment supply to full design, build, operate and maintain solutions. With over 400 plants in operation, Corix Water designs and builds water and wastewater treatment systems for municipal and industrial applications as well as true pre-assembled, pre-tested packaged water distribution systems. Corix Water also supplies a wide range of process equipment, control and electrical systems. Some of the services and products include:

- water purification systems
- wastewater treatment systems
- packaged valve and flow meter systems
- pilot plant testing
- valves, meters and pumps
- electrical, control and SCADA systems
- plant manufacturing and commissioning
- plant design, engineering, operation and maintenance
- capital cost reduction - lease programs

Corix Water Systems Inc. was established in 1963 and since then we have accumulated more 40 years of corporate experience and centuries of personal experience specific to water and waste water industry. With over 400 plants in operation throughout the world, Corix Water's systems are proven, reliable, and durable as we guarantee their performance.

Pre-engineered and fabricated plants

Corix Water provides clients with a "one-stop-shop" approach to water and wastewater treatment. We work with owners and their engineers and operators to pilot, select and design

each treatment system. We then fabricate and deliver factory-built, modular treatment plants complete with pre-fitted automatic control and electrical systems

Our unique ability to provide both process design and the fabrication and supply of process equipment and control systems means we can complete your project at a lower cost, in a shorter time, with comparable quality and performance to conventional on-site construction

Economic design

Corix Water provides over 30 plants a year, each with full chemical, electrical and control systems. Our process design costs are significantly lower than those needed for in-situ construction.

Economic manufacturing

Our manufacturing costs benefit from the economies of fabricating a large number of plants each year under production line conditions. All aspects of our treatment systems are constructed at our 70,000 sq. ft. facility in Langley, BC.

Economic building enclosure

Our plants can be installed within simple, slab on grade buildings. This opens the door to using cost effective, pre-engineered building enclosures that can be easily procured and erected by local builders.

Economic installation

Much of the mechanical and electrical work is undertaken in our factory prior to delivery. Consequently, the modules can be easily installed and the treatment system quickly completed and commissioned. Our approach requires significantly less site time from expensive, skilled trades than is needed for in-situ construction.

Our Guarantee

Our professional engineers will work with you analyzing your requirements and ensuring you are provided with the most cost effective and reliable system. You will benefit from our world leading expertise, ongoing research and development, and commitment to technological innovation. There is no substitute for proven field experience backed by many years of operation. Our systems are proven, reliable and we guarantee their performance.

Quality Assurance Program

The design, fabrication and assembly, in fact all aspects of the products and treatment systems that Terasen Water manufactures, are governed by strict adherence to our Quality Assurance Program. For the past 12 years we have embraced and ensured that the requirements of ISO 9002 – 1994 (not registered) are implemented and maintained.

This program begins with the inspection of incoming materials, valves, pumps, telemetry equipment, control devices, and other products; the design, fabrication, and assembly of water and wastewater treatment plants, the commissioning and service of these plants, inspections and testing at each stage of the manufacturing process. Procedures for purchasing of shop supplies or required parts; final assembly, testing, packaging and shipping are all encompassed in our Quality Assurance Program.

At the design stage, reviews are undertaken comparing the design inputs with the design outputs for each project and these are compared with a variety of requirements such as AWWA, Electrical Code and the appropriate environmental agency, to ensure adherence. Our welding / fabrication procedures follow the guidelines of the Mechanical Contractors Association and the American Aluminum Association / CSA standard W47.2 M1987. Before leaving our facility, each of our treatment plants go through a final extensive series of tests and inspections to ensure complete customer satisfaction.

Team Members

James Yap P.Eng., Chief Engineer - James is a professional engineer with over 18 years of experience in the design of water treatment systems. He has led our water treatment design team for six years and has supervised the design of over 200 small water treatment plants using conventional settling/filtration and membrane technologies. He is now responsible for coordination of projects as they move from design through to fabrication and commissioning. He is well experienced in the detailed design and installation of both conventional and membrane filtration systems.

Kaushik Biswas, P.Eng., Water & Waste Water Engineer - Kaushik joined Corix in 2007 and has over 7 years of experience in the design and manufacturing of water and wastewater plants. Prior to joining Corix Water Systems, Mr. Biswas worked for Earth Tech, Worley Parsons and Stantec. Kaushik has a PhD in Environmental Engineering from University of Alberta.

Andrew Stevano – Water & Wastewater Engineer EIT – Andrew has been designing/selling and project managing the construction of conventional, UF and RO membrane plants with BCA/Clearwater/Terasen/Corix for over 5. Andrew has a B.ASc in Mechanical Engineering, University of Waterloo (1985) and a pending Engineering Diploma from BCIT in Environmental Engineering.

Roderick Luk – Water & Wastewater Engineer – Roderick joined Corix in early 2007. Over the last one year with us, he has been involved in design and management of water treatment projects. Roderick graduated from University of British Columbia with a B.Sc. in Mechanical Engineering (2006).

Commissioning:

Alastair Smith - Alastair is a qualified electrician and instrumentation engineer and he is responsible for the commissioning of many of our plants. He has been undertaking this work for over 20 years and commissions in excess of 6-8 plants each year. Importantly he is well experienced in both the process chemistry and electrical and control elements of our plants and can tackle all of the issues that typically arise during commissioning.

5 Technicians – Five technicians including Alastair with 60 years combined experience in plant start-ups and commissioning.

Other Capabilities:

- Corix Water systems Inc. is a UL/CSA/EA registered panel & integration shop and a certified Allen Bradley strategic partner.
- In addition to design building our own Program Logic Control (PLC) panels and software for our plants we can provide SCADA, HMI and MCC packages.

Appendix C

Operation Costs

Operating Cost

Project **Kotzebue DAF-640-2**
Plant **CWS-DAF-640-2**
Ref # **1002-0251**

Summary of Electrical Loads

Description	Number	Phase	Voltage	kW	Total Connected load kW	Amps	Total kWh	Run Time per day Hours
Control Panel								
Rapid mixer	n/a							
Flocculators	4	1	115	0.37	1.48		35.52	24
Recycle Pumps	2	3	460	2.24	4.48		107.52	24
Air Compressor	1	3	230	0.75	0.75		1.49	2
Instrumentation etc	1	1	115	1.00	1.00		12	12
			Sub Total (kW)		7.71			
Mixers								
Coag. mixer	0	1	110	0.25	0.00		0	0
Soda Ash mixer	1	1	110	0.25	0.25		0.125	0.5
$KMnO_4$ mixer	0	1	110	0.25	0.00		0	0
			Sub Total (kW)		0.25			
Dosing Pumps								
Chemical dosing pump	3	1	110	0.03	0.03		1.08	12
			Sub Total (kW)		0.03			
		Total connected load (kW)			7.99			
		Total load for plant (kWH)					157.737	
		Total amps						

Power Cost: **$ 0.080** per kwh

Daily Power Cost $ 12.62

Daily Production 921,600 gallons or 3,488.62 cu.m.

Cost per 1000 gallons $ 0.01
Cost per cu. m. $ 0.00

Chemical Cost - DAF

	Typical Dosages ppm	
Estimated Chemical Dosages:		
Polymer	n/a	(1 max)
PAC	12	(5-80)
Soda Ash (Sodium Carbonate)	40	(typ. 50% of alum)
$KMnO_4$ mixer	0	
Sodium Hypochlorite (final disinfection)	2	

Flowrate in usgpm	640			
Plant Run Hours	24			
Total Galls per Day	921,600	or	3,488.62	cu.m.

Total Pounds of Chemicals Used Per Day

	#/day	#/month	$/#	Cost/day
Polymer:			$ 5.51	$ -
Pac	92.16	2764.8	$ 0.48	$ 44.24
Soda Ash:	307.2	9216	$ 0.15	$ 44.70
$KMnO_4$	0	0	$ 0.28	$ -
Sodium Hypochlorite (final disinfection)	128	3840	$ 0.22	$ 28.16
			total	**$117.09**

Chemical cost /cu. m. $0.03
Chemical cost /1000 gall. = $ 0.13

Total Operating Cost

Power	$ 0.01			
Chemicals	$ 0.13			
	$ 0.14	per 1000 gal or	$ 0.04	cu.m.

Electrical Load

Project	**Kotzebue WTP**
Plant	**NF-500**
Ref #	**1002-0251**

Summary of Electrical Loads

Description		Number	Phase	Voltage	kW	Total Connected load kW	Amps	Total kWh	Run Time per day
Instrumentation etc		1	1	110	1.00	1.00		24.00	24
Feed Pumping		1	3	460	112.00	112.00		2688.00	24
CIP Heater		1	3	575	48.00	48.00		11.04	0.23
Chemical Mixers		0	1	110	0.25	0.00		0.00	1
CIP Pump		1	3	575	11.20	11.20		2.91	0.26
Chemical dosing pumps		2	1	110	0.03	0.03		1.2	20
				Sub Total (kW)		172.23			
			Total load for plant (KWH)					2727.15	
			Total amps					0	

Power Cost:	$0.08	per kwh			
Daily Power Cost	$218.17				
Daily Production	720,000	gallons	or	2,725.49	cu.m.
Cost per 1000 gallons	$ 0.30				
Cost per cu. m.	$ 0.08				

Chemical Cost

Typical Dosages ppm

Estimated Chemical Dosages:

Caustic	10
Sodium HypoChlorite	0
Anit Scalent	2
Sodium bisulfate	2

Flowrate in usgpm	500			
Plant Run Hours	24			
Total Galls per Day	720,000	or	2,725	cu.m.

Total Pounds of Chemicals Used Per Day

		#/day	#/month			$/#		Cost/day
Anti-Scalent		12.00	360.00			$0.48		$5.76
Caustic:		60.00	1800.00			$0.20		$12.00
Hypochlorite (12%)		0.00	0.00			$0.23		$0.00
Sodium bisulfate		100.00	3000.00			$0.36		$36.00
							total	**$53.76**

Chemical cost /cu. m.	$0.02
Chemical cost /1000 gall. =	**$0.07**

Total Operating Cost

Power	$ 0.30			
Chemicals	$0.07			
	$ 0.38	per 1000 gal or	$ 0.10	cu.m.

Appendix D

DAF & Membrane References

corix
Water Systems

Corix/Terasen/BCA UF & Nano/RO Filtration Water Treatment Plant References

Customer and Location	Process	Capacity	Size	Year	Operator/Owner	Tel #	Value
Geogre West, Texas RO Unit Well #4	Nano Filtration	100 usgpm	2 Vessels, 7 elements per vessel	2000	Benjamin Tanguma City Manager Rubin Penna City Superintendent	361-449-1556 same	$ 150,000.00
Hualalai Resort, Hawaii	RO Filtration	700 usgpm	24 Vessels, 6 elements per vessel	2001	Charles Dawrs Operations Supervisor	808-325-8000	$ 1,100,000.00
Slocan, BC	Ultra-Filtraion	400 usgpm	28 HydraCap 60	2003	Jerry Simmons Operator	250-355-2246 250-355-2251	$ 300,000.00
Kukio, Hawaii	RO Filtration	208 usgpm	12 Vessels, 7 elements per vessel	2000	Island Utility Services	808-325-4074	$ 400,000.00
Suncor Firebag, AB	Ultra-Filtraion RO Filtration	50 usgpm	10 HydraCap 60 6 Vessels, 5 elements per vessel	2001	Suncor head office then press 2 for Ft McMurray	1-866-786-2671	$ 250,000.00
Pine Creek, MB	RO Filtration	180 usgpm	10 Vessels, 5 elements per vessel	2003	Lawrence	204-524-2149	$ 850,000.00
McRae Point, Ontario	Ultra-Filtration	20 usgpm	4 HydraCap 60	2004	Brad Warren	705-326-7054	$ 160,000.00
YMCA, Ontario	Ultra-Filtration	20 usgpm	4 HydraCap 60	2004	Jim Whitehead	416-413-1020	$ 160,000.00
Langdon Waterworks, AB	RO Filtration	180 gpm	6 Vessels, 5 elements per vessel	2003	Engineer: Sim-Flo Systems	403-291-5009	$ 211,500.00
Lakeshore Heights CA	Ultra-Filtration	60 usgpm	6 HydraCap 60	May-07	Engineer: Nolte, Dave Dauwalder	(916) 641-9100	$ 200,000.00

Hamlet of Zama, AB	Air Stripper Greensand PF RO Filtration	570 usgpm	34 Vessels, 6 elements per vessel	Dec. 2007	Engineer: DCL Seimens, Jim Clarke	(780) 486-2000	$ 1,050,000.00
Gilford Island, BC	RO Filtration	5 usgpm	3 Vessels 3 elements per vessel	2007	Irfan Gehlen, KWL Joe Jewell, Epcor	604-294-2088 604-230-0702	$ 145,000.00
Loysville, PA	Ultra-Filtration	60 usgpm	5 HydraCap 60	Sept. 2007 (in process)	Engineer: Rettew & Assoc., Charles Meyers	610-746-6530	$ 160,000.00
Tofino, BC	Ultra-Filtration	167 usgpm		2008	Matt Palmer, Koers & Associates	250-248-3151	$ 450,000.00
Collins Park, NS	UF/RO	30 usgpm		2008	Mike Chaulk, CBCL	902-421-7241	$ 380,000.00
Musquodoboit, NS	UF/RO	48 usgpm		2008	Mike Chaulk, CBCL	902-421-7241	$ 450,000.00
Big Sioux-Brant Lake, SD	Greensand PF RO Filtration	300 gpm	6 Vessels 5 elements per vessel	2008	Jeff Carruthers, Operator	605-270-2189	$ 450,000.00

CORIX WATER SYSTEMS

WATER & WASTEWATER TREATMENT & DISTRIBUTION
20329 LOGAN AVE., UNIT 100, LANGLEY, BC, CANADA V3A 4L8
Tel. (604) 539-9399 Fax (604) 539-9309
Toll Free: 1-800-500-8855

Dissolved Air Flotation WTP (Drinking Water) References

Operational Plants

Town of Gillam, MB
Twin train, 680 USgpm, (3.8 ML/d).
John / Stuart
204-652-2377

Town of Port Hardy, BC
Triple train, 1850 USgpm, (10 ML/d).
Dennis Dugas, Epcor Water Service,
(250) 902-2200

Town of McGrath, Alberta
Twin train, 600 USgpm, (3.3 ML/d)
Peter Brouwer, MPE Engineering,
(403) 317-3614

Joffre, Alberta (Nova Chemicals)
Twin train, 320 USgpm, (1.8 ML/d)
David Fray Nova Chemicals
403 314-8954 Joanne Neale

Town of Windsor NS
Twin train 1250 USgpm
Todd / Janice
(902) 798-8000

Municipality of Berens River, MB
Single Train 205 USgpm, (1.1 ML/d)

Brabent Lake SK
Single Train 30 USgpm, (0.2ML/d)
Charlie Robert, 306-758-2213

Town of Gypsum Co
Single Train 1250 USgpm
Tim Beck, Zancanella and Associates, 970
945-5700

Bunibonibee MB
Dual Train 405 USgpm (2.45 ML/d)
Richard Robinson, 204-538-2649

Telegraph Cove BC.
Single Train 85 USgpm
Paul Getman - Operator
250 949-1516

Shelburne, NS
One Train, 500 usgpm (2.7 ML/d)
In Production

Operational Plants

Pine Creek, MB
Twin train, 250 USgpm, (1.4 ML/d).
Tim Lasuik, J. R. Cousins, 204-489-0474
Keith Sparkman, 204-524-2149

Chapman Creek – Sunshine Coast, BC
Two DAF trains in Concrete tanks
4,600 USgpm (25 ML/d)
Don Gare - Operator
604 740-2568

Town of Bassano, AB
Twin train, 720 USgpm, (3.9 ML/d).
Ray Bouillet P.Eng, BSEI 403-247-2001
Tim – Operator, 403-641-3413

Coal Harbour, BC
Single Train 85 USgpm
Paul Getman - Operator
250 949-1516

Antigonish, NS
Twin train, 1560 usgpm (8.5 ML/d)
Wayne March
902-863-5025

Spring Hills, NS
Twin train, 962 usgpm (5.24 ML/d)
Bill/Richard – Operator
902-597-2818

Saltspring Island, BC
One Train, 72 usgpm (0.4 ML/d)
In Production

Muirfield, AB
Twin Train, 480 usgpm (2.6 ML/d)
Dale Forseyth, 403-333-9522

Cochrane Lake, AB
One Train, 624 usgpm (3.4 ML/d)
Rob Comartin, 403-995-2474

Cornwallis, NS
One Train, 770 usgpm (4.2 ML/d)
In Production

Enfield, NS
Twin train, 868 usgpm (4.7 ML/d)
In Production

GE
Water & Process Technologies

Budget Proposal for

City of Kotzebue

Z-BOX™-L Ultrafiltration Water Treatment Systems for Surface Water and Groundwater

Submitted to:
G. V. Jones

August 26, 2010

Proposal Number: 243532

Submitted by:

ZENON Environmental Corporation
c/o GE Water & Process Technologies Canada
Chris Allen, P.E. - Regional Manager

PH 503 471-1453

Local Representation By:

Dale McBain
APSCO, INC
PH 425 822-3335

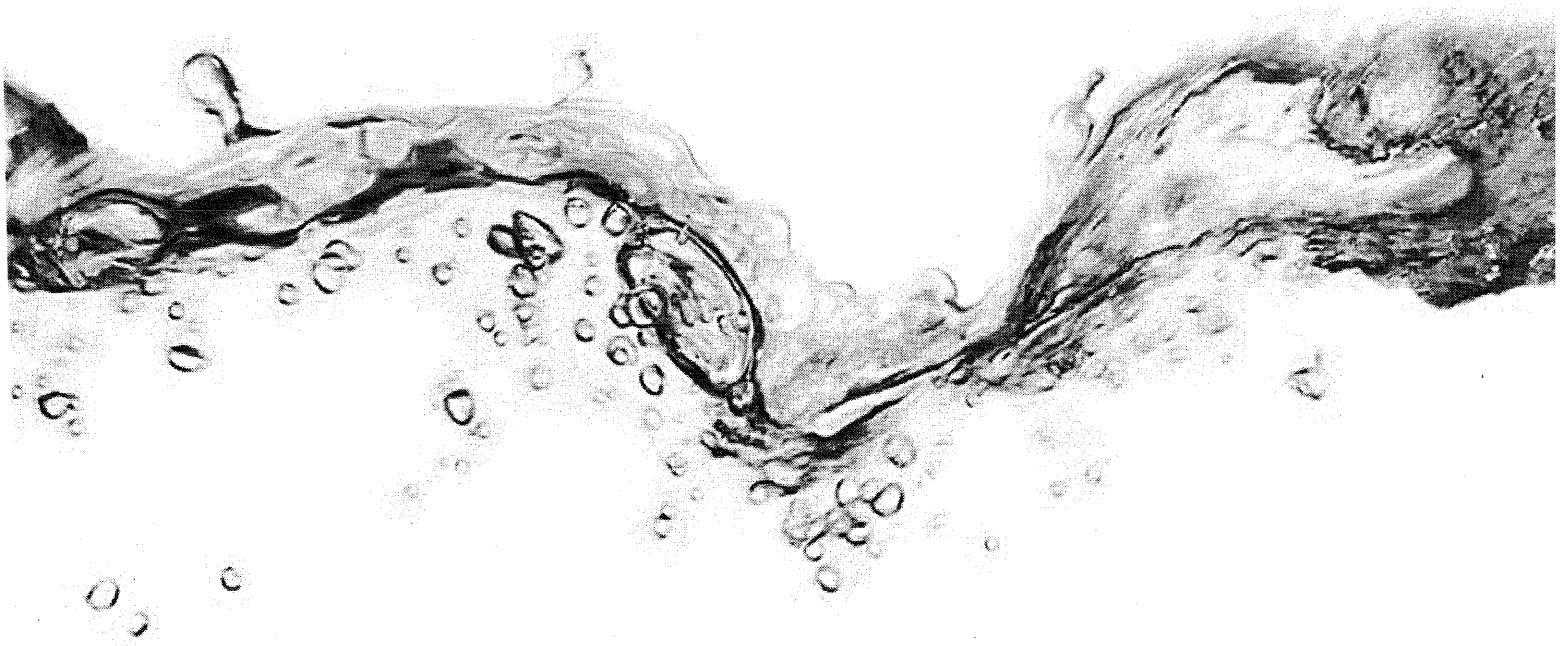

GE Water & Process Technologies
Confidential and Proprietary Information

GE Water & Process Technologies ("Seller") submits the information contained in this document for evaluation by GV Jones and their client only. These parties agree not to reveal its contents except to those in their organizations necessary for evaluation. Copies of this document may not be made without the prior written consent of Sellers Management. If the preceding is not acceptable, this document shall be returned to Seller.

1 Technical and Engineering Details

1.1 Basis of Design

This proposal is offered based on the following design values from two optional water sources to be used for drinking water.

Option 1: Existing source is Devil's Lake with backup from Vortac Lake. The proposal reflects GE supplying a Z-BOX™-L128 Ultrafiltration Water Treatment System with Zeeweed 500 membranes, for this source water. The system will include enhanced coagulation for TOC, TTHM, HAA5 and color reduction, and oxidation for manganese and iron reduction.

Option 2: Potential beach wells. No data has been provided on this source. All values are assumed for Option 2. The proposal reflects GE supplying a Z-BOX™-L 96 Ultrafiltration Water Treatment System for this source with the possibility of the need for reverse osmosis. No RO is include in this proposal.

Design Conditions

Design Temperature	3 °C
Design Capacity (Net) With All Trains In Service At 3°C	0.720 MGD
Design Capacity (Net) With One Train Out Of Service At 3C	0.720 MGD
Recovery	95 %

Physical Parameters for Option 1 only

Parameter	Raw Water	UF Treated Water
Turbidity (NTU)	0.80 to 28.4	< 0.01 NTU 95% of the time
Total Organic Carbon (mg/L)	8.1	Note 1
Color (TCU)	0-14	Note 1
pH	5.54-9.14	Note 2
Alkalinity (mg/L)	9-76	
Total Hardness (mg/L)	33-111	N/A
Iron (mg/L)	0.04-5.74	Limit is 0.30 Note 2
Manganese (mg/L)	0-4.14	Limit is 0.05 Note 2

Note 1: TOC removal is a function of three variables: TOC concentration levels in the water, type of coagulant used, and the pH of the water. Coagulant addition and pH adjustment is typically required to achieve TOC, UV254, and color removal. Removal efficiencies are dependent on optimization of the coagulation-flocculation pretreatment process.

Note 2: Pre-treatment including oxidant addition and pH adjustment may be required for the oxidation of dissolved iron and manganese. The treated water quality is dependent on optimization of the oxidation pre-treatment process.

Note 3: Maximum Feed/Operating Temperature is 40 Deg. C.

Note 4: Max/Min Feed/Operating pH Range 5 – 9.5.

Note 5: Maximum Chlorine (As Cl2) 1,000 mg/l (< 30 Deg. C), 500 mg/l (> 30 Deg. C).

Microbiological Removal Efficiencies

	Raw Water		Treated Water	
Giardia	Not stated	units/L	≥ 4.0	Log-removal Note 1
Cryptosporidium	Not stated	units/L	≥ 4.0	Log-removal Note 1

Note 1: The ZeeWeed® Membrane is guaranteed to achieve 4-log removal of Giardia and Cryptosporidium to the limits of detection as demonstrated during tests performed by the California Department of Health Services; however, 4-log removal can only be achieved if > 10^4 cysts/oocysts are present in the raw water. The selected operating mode influences the volumetric concentration factor (VCF). For a VCF > 1.0, a lower calculated log-removal value may result.

2 System Design and Scope

2.1 Z-BOX™-L Process Description

Z-BOX™-L Packaged Plants are pre-engineered, modular water treatment systems that bring proven ZENON ultrafiltration (UF) technology to municipal, industrial, and land development applications. Incorporating an expandable building block design, Z-BOX™ Packaged Plants can be quickly set up in virtually any location and feature scalable treatment capacity that can be rapidly increased as demand grows. These plug-and-play UF systems outperform conventional treatment alternatives in all categories, offering reduced operating costs, smaller plant footprints, more reliable performance, and high quality effluent that meets or exceeds the world's most stringent potable water standards.

Z-BOX™ packaged plants bring the proven large-plant features and performance of ZeeWeed® membranes to compact, pre-engineered water treatment systems.

Z-BOX™-L incorporates immersed, low pressure ZeeWeed® 1000/500 UF membranes, which are densely packed into modular components to maximize surface area. The membranes replace the solids separation function of granular filter media and clarifiers found in conventional systems, resulting in process footprints that are up to 10 times smaller than conventional systems of similar treatment capacity. The Z-BOX™ building-block architecture offers a high degree of flexibility in plant design, enabling greenfield plants to create facilities that best meet site, budget and public expectations. Aging or underperforming plants can also leverage the flexibility of ZeeWeed® to cost-effectively retrofit existing infrastructure with a state-of-the-art membrane system.

Figure 1: Z-BOX™ – L Configuration

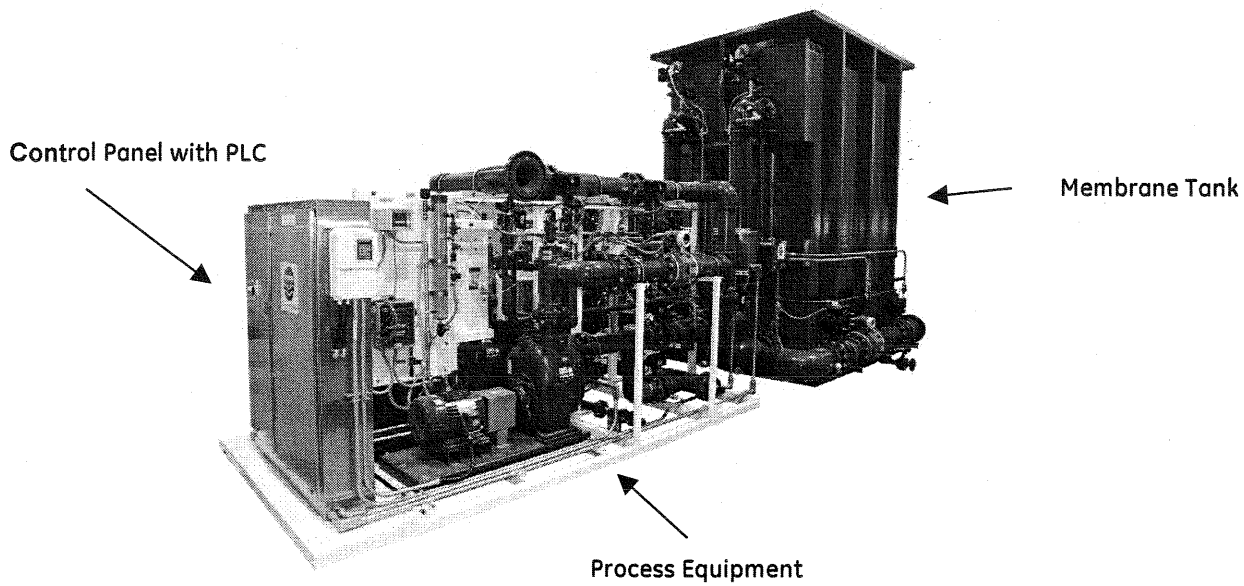

The hollow-fiber membranes utilize a low-pressure "outside-in" flowpath that reduces energy requirements for permeation, simplifies cleaning methods, and prevents particles from fouling and plugging the inside of the membrane fiber. Raw water is filtered through microscopic pores with nominal and absolute pore sizes of 0.02 and 0.1 microns (ZW 1000) / 0.04 and 0.1 microns (ZW 500) respectively. The microscopic pore size provides an extra measure of public health protection, removing a large percentage of impurities, and providing greater than ≥ 4 log removal of harmful pathogens such as *Giardia* cysts and *Cryptosporidium* oocysts.

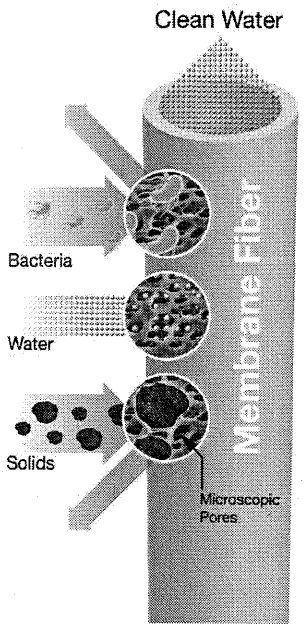

ZeeWeed® UF membranes operate under a low-pressure vacuum, drawing clean water to the inside of the fiber (outside-in flow path), while leaving impurities in the process tank.

Permeate pumps create the vacuum necessary to draw water through the membrane pores into the hollow fibers. Water then flows through the permeate pump to the treated water storage tank (or distribution system). Periodic backpulsing sustains optimum permeation by reversing the flow of permeate water to dislodge particles from the surface of the fiber. During backpulsing, air is also introduced at the bottom of the membrane modules to create turbulence along the membrane surface. Rising air bubbles scour and clean the outside of the membrane fibers. When necessary, in-tank chemical recovery cleanings can restore membrane permeability to optimum levels.

Membrane tanks, programmable logic controller, motor control panel and all membrane process equipment are incorporated into one condensed, skid–mounted package. The contractor simply connects the system to a raw water supply, waste piping, and electrical power to produce drinking water of the highest quality. Fewer processes, combined with highly automated, PLC operation makes plant operation less labor intensive and much more straightforward. Plant operators are only required to perform regular preventive maintenance on system pumps, blowers, and associated mechanical equipment to ensure optimum membrane permeation.

2.2 Proposed System Configuration

Parameter	Quantity
Option 1 - Type of Z-BOX™ Unit	Z-BOX™ L-128
Type of Membrane	ZeeWeed® 500
Module Surface Area (ft^2)	340
Number of Z-BOX™ Units	1
Number of Modules per Unit	132
Number of Module Spaces Per Unit	192
Number of Trains	3
Spare Space (%)	31.3%
Option 2 - Type of Z-BOX™ Unit	Z-BOX™ L-96

Type of Membrane	ZeeWeed® 1000
Module Surface Area (ft^2)	500
Number of Z-BOX™ Units	1
Number of Modules per Unit	88
Number of Module Spaces Per Unit	96
Number of Trains	2
Spare Space (%)	12.5 %

3 Scope of Supply

3.1 Scope of Supply by Seller

Quantity	Description
Option 1	**Surface Water – Z-BOX L 128**
Pre-Treatment System	
3	Duty Automatic Backwashing Strainer: Each strainer comes with loose-ship isolation valves, pressure gauges, and local control panel
1	Stand-by Basket Strainer: Each pre-screen comes with loose-ship isolation valves
3	Feed Water Turbidimeter – loose-ship
1	Enhanced Coagulation System: Each coagulation system includes: one (1) coagulant day tank, one (1) duty and one (1) stand-by coagulant dosing pump (panel mounted), one (1) static mixer, and one (1) flocculation tank with a top-mounted mechanical mixer. A feed flow control valve and level transmitter in the flocculation tank will control the level in the flocculation tank.
1	Enhanced Oxidation System: Each oxidation system includes: one (1) oxidant day tank, one (1) duty and one (1) stand-by oxidant dosing pump (panel mounted), one (1) static mixer, and one (1) oxidation tank with a top-mounted mechanical mixer. A feed flow control valve and level transmitter in the oxidation tank will control the level in the oxidation tank.
1	pH Adjustment System: Each pH adjustment system includes one (1) chemical dosing pump and one (1) day tank for chemical storage
Membranes and Tankage	
3	Membrane Tanks - carbon steel with epoxy coating-top loading
3	Membrane Cassettes with 44 modules installed per cassette
	Membrane Tank Feed Flow Control Valves (block and bleed arrangement included)
	Membrane Tank Drain Flow Valves
	Aeration Valves
	Sets of Valves and Pressure Transmitters for MIT
	Sets of CIP Circulation Valves (block and bleed arrangement included)
	Vacuum Ejectors for priming
	Membrane Tank Level Transmitters
Permeate Pumping System	
	Process Pump Skid: Each process pump skid includes two (2) process pumps (with VFDs) complete with required isolation valves, pressure gauges, transmembrane pressure transmitters, and flowmeters. Piping contained on the skid will be PVC.
3	Permeate Turbidimeter (panel mounted and supplied on the process pump skid)
Membrane Air Scour System	
	Membrane Air Scour Blower, supplied loose, complete with required isolation valves, flow switches and pressure gauges.

Backwash System	
	Backwash Water Storage Tank and associated valves.
	Backwash Water Storage Tank Level Transmitter
Membrane Cleaning Systems	
	CIP Pump (with VFD) supplied skid-mounted, complete with required isolation valves, pressure gauges, and flowmeter. Piping contained on the skid will be PVC.
	Chlorine Analyzer (panel mounted and supplied on the CIP pump skid)
	pH Analyzer (panel mounted and supplied on the CIP pump skid)
	CIP Storage Tank and associated valves. Tank will come with a tank heater and temperature transmitter.
	CIP Water Storage Tank Level Transmitter
	Sodium Hypochlorite Chemical Feed System Includes two (2) (one (1) duty, one (1) stand-by) panel mounted chemical pumps, associated isolation valves, calibration column, level switch and foot valve. Piping contained on the skid will be PVC.
	Citric Acid Chemical Feed System Includes two (2) (one (1) duty, one (1) stand-by) panel mounted chemical pumps, associated isolation valves, calibration column, level switch and foot valve. Piping contained on the skid will be PVC.
	Sodium Bisulfite Chemical Feed System Includes two (2) (one (1) duty, one (1) stand-by) panel mounted chemical pumps, associated isolation valves, calibration column, level switch and foot valve. Piping contained on the skid will be PVC.
	Sodium Hydroxide Chemical Feed System Includes two (2) (one (1) duty, one (1) stand-by) panel mounted chemical pumps, associated isolation valves, calibration column, level switch and foot valve. Piping contained on the skid will be PVC.
Electrical and Control Equipment Note 1	
	Allen Bradley PLC complete with touch screen HMI installed on the Permeate Pump Skid
Miscellaneous	
2	Air compressor and Air Receiver Tank for pneumatic valve operation and membrane integrity test. Duty amd Standby.
	Refrigerated Air Dryer
Option 2- Ground Water- One (1) Z-BOX L 96	
Pre-Treatment System	
1	Duty Automatic Backwashing Strainer: Each strainer comes with loose-ship isolation valves, pressure gauges, and local control panel
1	Stand-by Basket Strainer: Each pre-screen comes with loose-ship isolation valves
2	Feed Water Turbidimeter – loose-ship
Membranes and Tankage	
2	Membrane Tanks - 316 stainless steel side loading
2	Membrane Cassettes with 42 modules installed per cassette
	Membrane Tank Feed Flow Control Valves (block and bleed arrangement included)
	Membrane Tank Drain Flow Valves
	Aeration Valves
	Sets of Valves and Pressure Transmitters for MIT
	Sets of CIP Circulation Valves (block and bleed arrangement included)

	Vacuum Ejectors for priming
	Membrane Tank Level Transmitters
Permeate Pumping System	
	Process Pump Skid: Each process pump skid includes two (2) process pumps (with VFDs) complete with required isolation valves, pressure gauges, transmembrane pressure transmitters, and flowmeters. Piping contained on the skid will be PVC.
	Permeate Turbidimeter (panel mounted and supplied on the process pump skid)
Membrane Air Scour System	
	Membrane Air Scour Blower, supplied loose, complete with required isolation valves, flow switches and pressure gauges.
Backwash System	
	Backwash Water Storage Tank and associated valves.
	Backwash Water Storage Tank Level Transmitter
Membrane Cleaning Systems	
	CIP Pump (with VFD) supplied skid-mounted, complete with required isolation valves, pressure gauges, and flowmeter. Piping contained on the skid will be PVC.
	Chlorine Analyzer (panel mounted and supplied on the CIP pump skid)
	pH Analyzer (panel mounted and supplied on the CIP pump skid)
	CIP Storage Tank and associated valves. Tank will come with a tank heater and temperature transmitter.
	CIP Water Storage Tank Level Transmitter
	Sodium Hypochlorite Chemical Feed System Includes two (2) (one (1) duty, one (1) stand-by) panel mounted chemical pumps, associated isolation valves, calibration column, level switch and foot valve. Piping contained on the skid will be PVC.
	Citric Acid Chemical Feed System Includes two (2) (one (1) duty, one (1) stand-by) panel mounted chemical pumps, associated isolation valves, calibration column, level switch and foot valve. Piping contained on the skid will be PVC.
	Sodium Bisulfite Chemical Feed System Includes two (2) (one (1) duty, one (1) stand-by) panel mounted chemical pumps, associated isolation valves, calibration column, level switch and foot valve. Piping contained on the skid will be PVC.
	Sodium Hydroxide Chemical Feed System Includes two (2) (one (1) duty, one (1) stand-by) panel mounted chemical pumps, associated isolation valves, calibration column, level switch and foot valve. Piping contained on the skid will be PVC.
Electrical and Control Equipment Note 1	
	GE Fanuc PLC complete with touch screen HMI installed on the Permeate Pump Skid
Miscellaneous	
2	Air compressor and Air Receiver Tank for pneumatic valve operation and membrane integrity test. Duty and Standby
	Refrigerated Air Dryer
General	
3 Sets	Equipment P&IDs, Electrical, and General Arrangement Drawings
3	Operating & Maintenance Manuals
45	Days Field Service and Process Start-Up Assistance Note 3
	Operator Training Note 3
1	Year Mechanical Warranty on Equipment
2	Year Full Membrane Replacement Warranty

1	Year 24/7 Emergency Telephone Support

Note 1: A NEMA 4 control panel is located on the Process Pump Skid and on the CIP Pump Skid. The main control panel is the one located on the Process Pump Skid and will contain the PLC. The control panels located on any additional Process Pump Skids and the CIP Pump Skid are "slave" (remote) panels. Communication between the panels utilize Ethernet connections.
Note 2: In order to remove a cassette from the membrane tank a lifting bracket must be attached to the top of the cassette. The cassette can then be lifted from the membrane tank using a monorail/bridge crane (by others).

Note 3: 45 days over 2 trips have been included for equipment off-loading and installation assistance, commissioning and start-up assistance, membrane installation assistance, operator training, and performance testing.

Note 4: Spare parts are NOT included in GE's scope of supply as a part of this proposal. For a list spare parts and adder price for those spare parts, please contact GE.

3.2 Scope of Supply by Owner

The following items are for supply by Owner and will include but are not limited to:

- Review of GE supplied equipment drawings and specifications
- Overall plant design, detail drawings of all termination points where GE equipment or materials tie into equipment or materials supplied by others
- Delivery, receiving, unloading and safe storage of GE equipment at site until ready for installation
- Civil works, equipment foundations, equipment mounting pads, including shelter for housing GE supplied equipment.
- Equipment installation including all bolts, brackets and fasteners; anchor bolt sizing, seismic structural analysis, and AK engineer's stamp
- Interconnecting piping and wiring between GE supplied skids.
- Installation & removal of temporary screen (0.5 mm mesh) on all process lines entering the membrane basins to prevent membrane damage
- Flushing and disinfection of all piping and membrane tanks and verification of removal of all residual debris from construction
- Collection and disposal of spent water
- Raw materials, chemicals, and utilities during start-up and operation
- Bulk chemical storage facilities, including chemical totes
- All required permits
- Supply of telephone/fax/modem access while GE staff are on-site
- Laboratory services, operating and maintenance personnel during equipment checkout, start-up and operation

4 Commercial Offer

4.1 Pricing

Pricing for the proposed equipment and services as described in this budget proposal:

Budgetary System Prices:

Option 1 Surface Water	**$ 1,496,000 USD**
Option 2 Ground Water	**$ 896,000 USD**

All pricing is based on the operating conditions and influent analysis detailed in Section 1. The pricing herein is for budgetary purposes only and does not constitute a final offer of sale.

4.2 Equipment Shipment and Delivery

Equipment shipment is estimated at 30 to 36 weeks after order acceptance. The Buyer and Seller will arrange a kick off meeting after contract acceptance to develop a firm shipment schedule.

Typical Drawing Submission and Equipment Shipment Schedule

		6-8 weeks	2 weeks	24-26 weeks		2 weeks
Acceptance of PO						
Submission of Drawings						
Drawings Approval						
Equipment Manufacturing						
Equipment Shipment						
Plant Operations Manuals						

The delivery schedule is presented based on current workload backlogs and production capacity. This estimated delivery schedule assumes no more than 2 weeks for Buyer review of submittal drawings. Any delays in Buyer approvals or requested changes may result in additional charges and/or delay to the schedule.

4.3 Freight

The following freight terms used are as defined by INCOTERMS 2000.

All pricing is FCA from Oakville, ON.

4.4 Bonds

Performance or Payment Bonds are not included in the system price. These bonds can be purchased on request but will be at additional cost.

4.5 Invoicing and Payment Terms

The budget pricing quoted in this proposal is based on the following terms of payment:

- 15% with Purchase Order;
- 25% on Submission of General Arrangement Drawings;
- 50% on Notification That Equipment is Ready to Ship;
- 10% within Thirty (30) Days of Equipment Start-Up or Within Sixty (60) Days of Equipment Shipment, Whichever is Sooner.

Payment terms are net 30 days from date of invoice.

4.6 Pricing Notes

- All prices quoted are in USD
- Any applicable sales or value added tax is not included,
- The Buyer will pay all applicable Local, State, or Federal taxes and Duties
- The equipment delivery date, start date, and date of commencement of operations are to be negotiated.
- Commercial Terms and Conditions shall be in accordance with Seller's Standard Terms and Conditions of Sale.
- Seller's price and delivery schedule are based on the assumptions that Buyer will take delivery as and when foreseen by the schedule. Where this is not the case, the Parties must agree in advance an alternative place of delivery, failing which the Seller will be entitled to ship the equipment to storage.

4.7 Conditional Offering

Buyer understands that this proposal has been issued based upon the information provided by Buyer, and currently available to Seller, at the time of proposal issuance. Any changes or discrepancies in site conditions (including but not limited to system influent characteristics, changes in Environmental Health and Safety ("EH&S") conditions, and/or newly discovered EH&S concerns, Buyer's financial standing, Buyer's requirements, or any other relevant change, or discrepancy in, the factual basis upon which this proposal was created, may lead to changes in the offering, including but not limited to changes in pricing, warranties, quoted specifications, or terms and conditions. Seller's offering in this proposal is conditioned upon a full Seller EH&S, and Buyer financial review.

GE
Water & Process Technologies

Catalog Sheet

Z-BOX* L Packaged Plants

Pre-engineered Packaged Plants are cost effective, compact solutions for potable water treatment

Benefits

- ZeeWeed* ultrafiltration membrane effectively blocks and removes particles, bacteria, viruses and cysts from water supplies
- Full featured treatment system for variable water quality
- PLC-control provides cost-effective operation and maintenance
- Easy-to-install into existing or new facilities which reduces capital costs
- Pretreatment for RO membranes
- Turbidity, TOC, manganese, iron and arsenic removal
- Expandable modular design

Application Dependent Options

- Feedwater screens
- Enhanced coagulation (E.C.), or oxidation system with +/-pH adjustment
- NaOCl and Citric Acid cleaning systems, and neutralization pumps
- Treated and feedwater turbidimeter and particle counters
- Clean in place system including pump, water tank and heater
- Allen Bradley PLC
- Disinfection
- Shelf spares
- ZenoTrac* process tracking system

Model	Width	Length	Membrane Module	Membrane Tank	MGD (m^3/d) Max. Flow
Z-BOX L96	29' (8.84m)	37' (11.28M)	ZW1000	Side loading stainless steel	1.73 (6.548)
Z-BOX L128	30' (9.14m)	40' (12.19m)	ZW500	Epoxy coated carbon steel	1.80 (6.813)
Z-BOX L192	29' (8.84m)	43' (13.11m)	ZW1000	Side loading stainless steel	3.25 (12.301)

Voltage 400/480 or 575 V, 3 phase, 50/60Hz

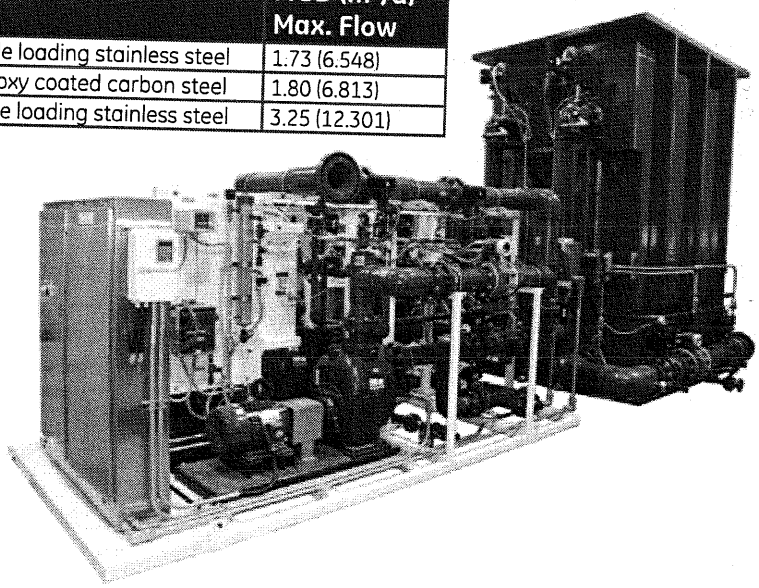

Base System

Permeate and backpulse pump and associated valves; control panel with GE Fanuc PLC and HMI interface mounted on an epoxy coated carbon steel frame, membrane tanks, blowers, air compressor, membrane integrity test (MIT)

ZENON Membrane Solutions
Oakville, Ontario, Canada
+1-905-465-3030
www.gewater.com

Global Headquarters
Trevose, PA
+1-215-355-3300

Europe/Middle East/Africa
Heverlee, Belgium
+32-16-40-20-00

Asia/Pacific
Shanghai, China
+86 (0) 411-8366-6489

© 2006, General Electric Company. All rights reserved.
*Trademark of General Electric Company; may be registered in one or more countries.

SC-ZBOXL-CAT-EN 1006 NA/EMEA

0101	12"	150# PVC FLG	PRE-TREATED FEED WATER
0102	12"	150# PVC FLG	PRE-TREATED FEED WATER
0103	10"	150# PVC FLG	DRAIN/ REJECT BY GRAVITY
0104	10"	150# PVC FLG	DRAIN/ REJECT BY GRAVITY
0105	12"	150# PVC FLG	PERMEATE TANK OVERFLOW TO DRAIN
0106	10"	150# PVC FLG	CIP TANK OVERFLOW TO DRAIN
0107	8"	150# PVC FLG	TREATED WATER TO POST-TREATMENT
0108	6"	150# PVC FLG	CIP DISCHARGE TO DRAIN
0109	10"	150# PVC FLG	BACKPULSE OVERFLOW TO DRAIN
0110	2"		BACKPULSE DRAIN
0111	2"		CIP TANK DRAIN
0112	2"		TO DRAIN
0113	2"		TO DRAIN

ITEM NO.	DESCRIPTION	P & ID REF.
1	MEMBRANE TANKS	L96-D-003
2	PERMEATE SKID	L96-D-005
3	BACKPULSE TANK	L96-D-007
4	BLOWERS	L96-D-002
5	COMPRESSORS	L96-D-012
6	SODIUM HYPOCHLORITE SYSTEM WITH OPTIONAL SPARE PUMP	L96-D-011
7	SODIUM BISULFITE SYSTEM WITH OPTIONAL SPARE PUMP	L96-D-011
8	CITRIC ACID SYSTEM WITH OPTIONAL SPARE PUMP	L96-D-011
9	SODIUM HYDROXIDE SYSTEM WITH OPTIONAL SPARE PUMP	L96-D-011
10	CIP TANK	L96-D-010
11	CIP SKID	L96-D-010

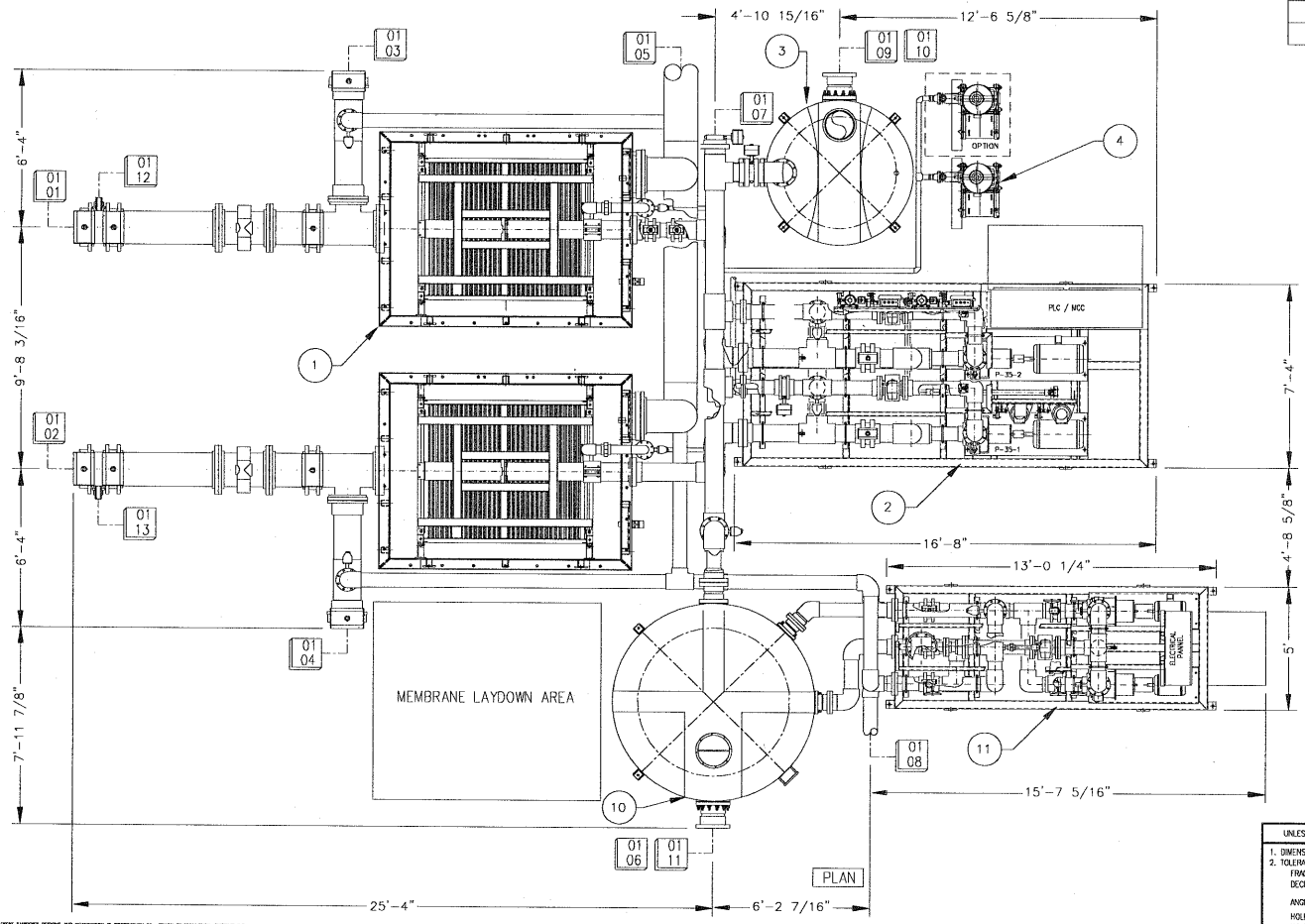

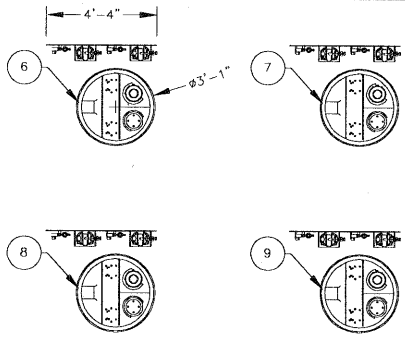

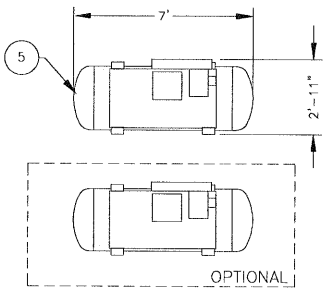

REV.	DATE		ZONE	DSGN	APPD
0	06/07/20	STANDARD – CONTROLLED DOCUMENT		MKK	–

UNLESS OTHERWISE SPECIFIED:
1. DIMENSIONS ARE IN INCHES
2. TOLERANCES
FRACTIONS ± 1/8 "
DECIMALS .X ± .030
.XX ± .015
ANGLES ± .5 DEG
HOLE SIZES ± 1/32 "
HOLE CENTRES ± 1/32 "

DRAWING INTERPRETATION: ANSI Y14.5 M

APPROVAL		DATE (Y/M/D)
DRWN:	MKK	06/07/20
DSGN:	MKK	06/07/20
CHKD:		
APPD:		
CADD FILE:	ZBOX.L128G001	
SCALE:	NTS	

GE Water & Process Technologies
ZENON Membrane Solutions

CUSTOMER: Z-BOX L128

TITLE: GENERAL ARRANGEMENT WATER TREATMENT PLAN

SIZE: D

DRAWING NO. ZBOX L128-G-001 SHEET 1 OF 2

REV. 0

THIS DOCUMENT EMBODIES DESIGNS AND INFORMATION IS PROPRIETARY TO ZENON ENVIRONMENTAL SYSTEMS INC. IT IS TO BE USED ONLY FOR THE PURPOSE AND BY THE ENTITY FOR WHICH IT WAS ORIGINALLY SUPPLIED. THE DOCUMENT MAY NOT BE DUPLICATED, DISCLOSED TO ANY OTHER PERSON OR ENTITY, OR USED FOR MANUFACTURE OF THE ITEM IN PART OR IN WHOLE WITHOUT THE PRIOR WRITTEN PERMISSION OF ZENON ENVIRONMENTAL SYSTEMS INC.

0101	12"	150# PVC FLG	PRE-TREATED FEED WATER
0102	12"	150# PVC FLG	PRE-TREATED FEED
0103	10"	150# PVC FLG	DRAIN/ REJECT BY GRAVITY
0104	10"	150# PVC FLG	DRAIN/ REJECT BY GRAVITY
0105	12"	150# PVC FLG	PERMEATE TANK OVERFLOW TO DRAIN
0106	10"	150# PVC FLG	CIP TANK OVERFLOW TO DRAIN
0107	8"	150# PVC FLG	TREATED WATER TO POST-TREATMENT
0108	6"	150# PVC FLG	CIP DISCHARGE TO DRAIN
0109	10"	150# PVC FLG	BACKPULSE OVERFLOW TO DRAIN
0110	2"		BACKPULSE DRAIN
0111	2"		CIP TANK DRAIN
0112	2"		TO DRAIN
0113	2"		TO DRAIN

ITEM NO.	DESCRIPTION	P & ID REF.
1	MEMBRANE TANKS	L96-D-003
2	PERMEATE SKID	L96-D-005
3	BACKPULSE TANK	L96-D-007
4	BLOWERS	L96-D-002
5	COMPRESSORS	L96-D-012
6	SODIUM HYPOCHLORITE SYSTEM WITH OPTIONAL SPARE PUMP	L96-D-011
7	SODIUM BISULFITE SYSTEM WITH OPTIONAL SPARE PUMP	L96-D-011
8	CITRIC ACID SYSTEM WITH OPTIONAL SPARE PUMP	L96-D-011
9	SODIUM HYDROXIDE SYSTEM WITH OPTIONAL SPARE PUMP	L96-D-011
10	CIP TANK	L96-D-010
11	CIP SKID	L96-D-010

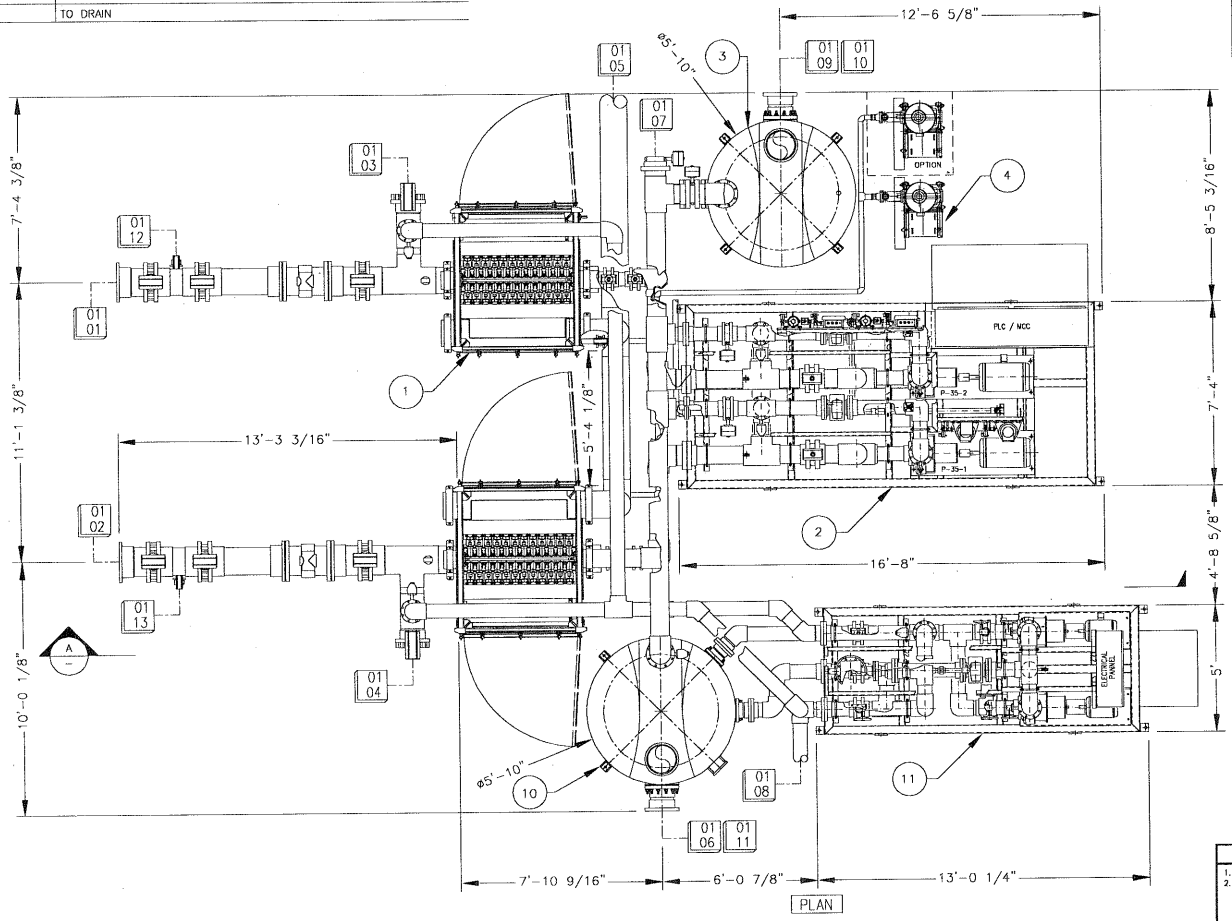

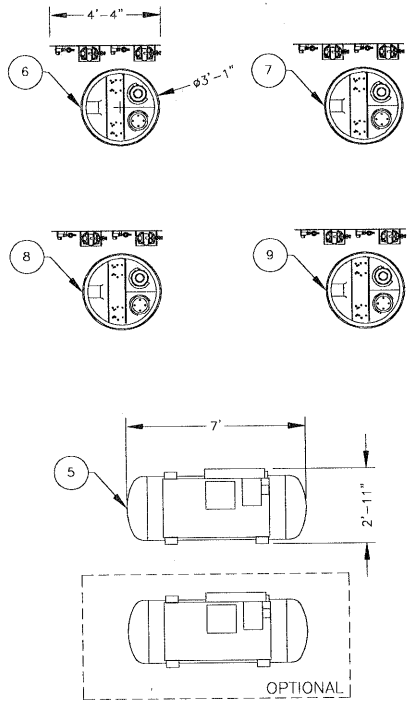

REV.	DATE		ZONE	DSGN	APPD
0	06/07/20	STANDARD - CONTROLLED DOCUMENT		NK	-

UNLESS OTHERWISE SPECIFIED:
1. DIMENSIONS ARE IN INCHES
2. TOLERANCES
FRACTIONS ± 1/8 °
DECIMALS .X ± .030
.XX ± .015
ANGLES ± .5 DEG
HOLE SIZES ± 1/32 °
HOLE CENTRES ± 1/32 °

DRAWING INTERPRETATION: ANSI Y14.5 M

APPROVAL	DATE (Y/M/D)
DRWN: MKK	06/07/20
DSGN: MKK	06/07/20
CHKD:	
APPD:	
CADD FILE: ZBOXL96C001	
SCALE: NTS	

GE Water & Process Technologies
ZENON Membrane Solutions

CUSTOMER: Z-BOX L96

TITLE: GENERAL ARRANGEMENT WATER TREATMENT PLAN

SIZE: D | DRAWING NO. ZBOX L96-G-001 | SHEET 1 OF 3 | REV. 0

THIS DOCUMENT EMBODIES DESIGNS AND INFORMATION IS PROPRIETARY TO ZENON ENVIRONMENTAL SYSTEMS INC. IT IS TO BE USED ONLY FOR THE PURPOSE AND BY THE ENTITY FOR WHICH IT WAS ORIGINALLY SUPPLIED. THE DOCUMENT MAY NOT BE DUPLICATED, DISCLOSED TO ANY OTHER PERSON OR ENTITY, OR USED FOR MANUFACTURE OF THE ITEM IN PART OR IN WHOLE WITHOUT THE PRIOR WRITTEN PERMISSION OF ZENON ENVIRONMENTAL SYSTEMS INC.

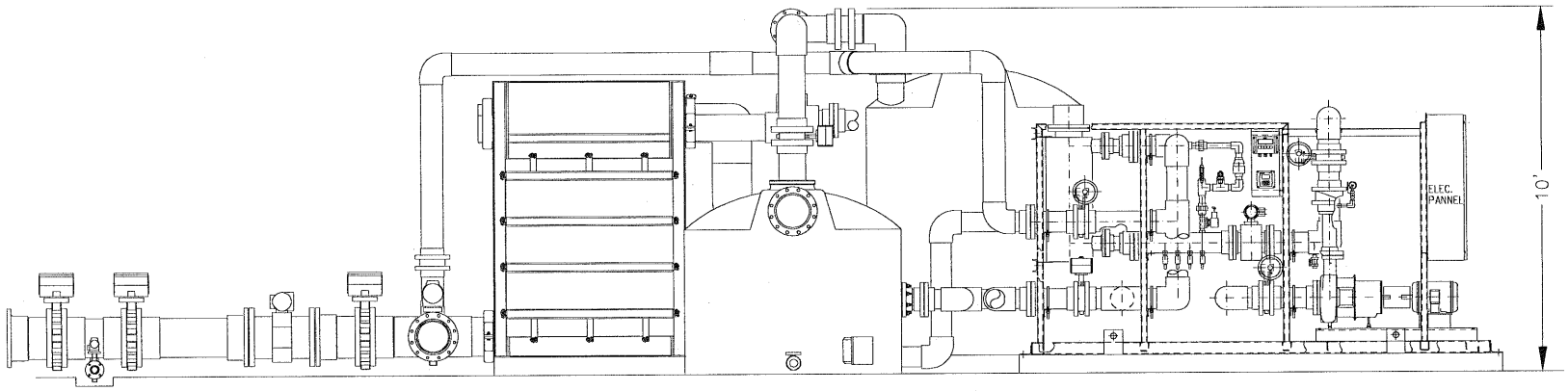

FRONT VIEW

REV.	DATE		ZONE	DSGN	APPD
0	05/07/20	STANDARD – CONTROLLED DOCUMENT		NK	–

UNLESS OTHERWISE SPECIFIED:

1. DIMENSIONS ARE IN INCHES
2. TOLERANCES
   - FRACTIONS ± 1/8 "
   - DECIMALS .X ± .030, .XX ± .015
   - ANGLES ± .5 DEG
   - HOLE SIZES ± 1/32 "
   - HOLE CENTRES ± 1/32 "

DRAWING INTERPRETATION: ANSI Y14.5 M

APPROVAL		DATE (Y/M/D)
DRWN:	MKK	05/07/20
DSGN:	MKK	05/07/20
CHKD:		
APPD:		
CADD FILE:	ZBOXL96G001	
SCALE:	NTS	

GE Water & Process Technologies
ZENON Membrane Solutions

CUSTOMER: Z-BOX L96

TITLE: GENERAL ARRANGEMENT WATER TREATMENT PLAN

SIZE: D | DRAWING NO. ZBOX L96-G-001 | SHEET 2 OF 3 | REV. 0

THIS DOCUMENT EMBODIES DESIGNS AND INFORMATION IS PROPRIETARY TO ZENON ENVIRONMENTAL SYSTEMS INC. IT IS TO BE USED ONLY FOR THE PURPOSE AND BY THE CLIENT FOR WHICH IT WAS ORIGINALLY SUPPLIED. THE DOCUMENT MAY NOT BE DUPLICATED, DISCLOSED TO ANY OTHER PERSON OR ENTITY, OR USED FOR MANUFACTURE OF THE ITEM IN PART OR IN WHOLE WITHOUT THE PRIOR WRITTEN PERMISSION OF ZENON ENVIRONMENTAL SYSTEMS INC.

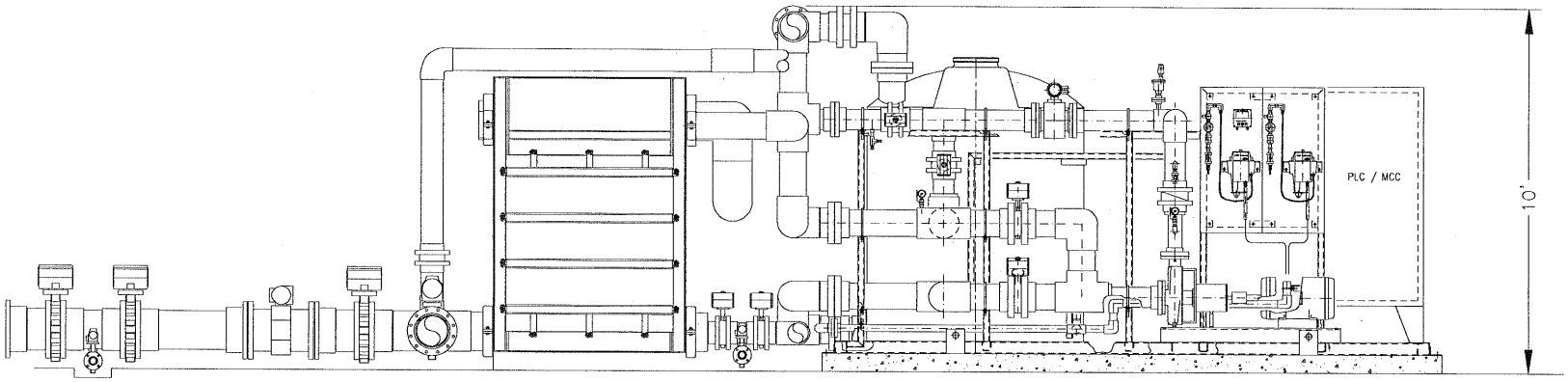

SECTION 'A'–'A'

REV.	DATE		ZONE	DSGN	APPD
0	05/07/20	STANDARD – CONTROLLED DOCUMENT		NK	–

UNLESS OTHERWISE SPECIFIED:	APPROVAL	DATE (Y/M/D)
1. DIMENSIONS ARE IN INCHES 2. TOLERANCES FRACTIONS ± 1/8 " DECIMALS .X ± .030 .XX ± .015 ANGLES ± .5 DEG HOLE SIZES ± 1/32 " HOLE CENTRES ± 1/32 "	DRWN: MKK	05/07/20
	DSGN: MKK	05/07/20
	CHKD:	
	APPD:	
	CADD FILE: ZBOXL96G001	
DRAWING INTERPRETATION: ANSI Y14.5 M	SCALE: NTS	

GE Water & Process Technologies
ZENON Membrane Solutions

CUSTOMER: Z-BOX L96

TITLE: GENERAL ARRANGEMENT
WATER TREATMENT PLAN

SIZE: D | DRAWING NO. ZBOX L96-G-001 | SHEET 3 OF 3 | REV. 0

THIS DOCUMENT EMBODIES DESIGNS AND INFORMATION IS PROPRIETARY TO ZENON ENVIRONMENTAL SYSTEMS INC. IT IS TO BE USED ONLY FOR THE PURPOSE AND BY THE ENTITY FOR WHICH IT WAS ORIGINALLY SUPPLIED. THE DOCUMENT MAY NOT BE DUPLICATED, DISCLOSED TO ANY OTHER PERSON OR ENTITY, OR USED FOR MANUFACTURE OF THE ITEM IN PART OR IN WHOLE WITHOUT THE PRIOR WRITTEN PERMISSION OF ZENON ENVIRONMENTAL SYSTEMS INC.

D3H-H2

Pall Corporation

Pall Corporation – Water Processing
25 Harbor Park Drive
Port Washington, NY 11050

516-484-5400 phone
516-484-3216 fax
www.pall.com

Budgetary Proposal

Kotzebue, AK

Proposal Date:
August 25, 2010

Submitted By:
Pall Corporation
25 Harbor Park Drive
Port Washington, NY 11050

PALL Water Processing

PROPRIETARY & CONFIDENTIAL INFORMATION NOTICE

This proposal document, proprietary to Pall Corporation, is furnished in confidence solely for use in evaluating the proposal and for no other direct or indirect use, and no rights are granted to the recipient for any information disclosed in this proposal. "It contains proprietary information which may be the subject of an issued patent or pending application in the United States or elsewhere." By accepting this document from Pall Corporation the recipient agrees:

- To use this document and the information it contains exclusively for the above-stated purpose and to avoid use of the information for performance of the proposed work by recipient itself or any third party

- To avoid publication or other disclosure of this document or the information it contains to any third party without the prior approval of Pall Corporation

- To make only those copies needed for recipient's internal review, and

- To return this document and any copies thereof when they are no longer needed for the purpose for which furnished or upon the request of Pall Corporation

PALL Water Processing

TABLE OF CONTENTS

1.0 Pall Aria™ Water Treatment Systems

1.1 Aria Packaged Microfiltration System - Overview
1.2 Aria Packaged Microfiltration System – Operations
1.3 Advantages of Pressure MF Systems Over Vacuum Systems

2.0 Overview of Pall Corporation

2.1 Executive Summary
2.2 Membrane Experience & Qualifications
2.3 Corporate Philosophy
2.4 Customer Service
2.5 Quality Management Systems
2.6 Quality in Engineering

3.0 Technical Specifications

3.1 Microfiltration System
3.1.1 Scope of Supply – PALL
3.1.2 Scope of Supply – OTHERS

3.2 Equipment Technical Specification

3.2.1 Membrane System
3.2.2 Compressed Air System
3.2.3 Chemical, Hot Water, Neutralization (CHN) Skid
3.2.4 CIP Transfer/Injection
3.2.5 Control & Monitoring Equipment

4.0 Pricing Summary

SECTION ONE

Pall Aria™ Water Treatment Systems

1.1 Microfiltration System - Overview

Pall Aria™ Water Treatment Systems are specifically designed to produce drinking water that meets today's stringent standards. The systems use uniquely designed filtration modules in a hollow fiber configuration to remove the following contaminants from surface and ground water sources.

- Suspended Solids/Turbidity
- Viruses
- Bacteria
- Cysts and Oocysts
- Iron and Manganese
- Arsenic
- Organics

The Microza hollow fiber membranes are highly permeable resulting in high water production rates. Each hollow fiber module provides high active surface area of up to 538 ft2. Pall's dedication to a simplified process and control design has produced a family of systems that are characterized by:

- Tough, long service hollow fiber membranes
- Operator friendly controls
- Simple surface water treatment without coagulation
- Unique air scrub and flush operation
- High efficiency, low waste
- Excellent compatibility with chlorine and common treatment chemicals
- Minimal cost of operation
- Easy installation using modular skids
- Compact system footprint
- Full system NSF 61 listing
- ISO 9001 certified manufacturing
- ETV certified for surface water treatment rule
- Site testing confirmed Pall Aria Systems meet or exceed EPA standards for safe drinking water.

The system is also the first to receive 'full system' certification in accordance with ANSI/NSF 61 Specifications.

Membrane filtration is a pressure driven process that uses a semi-permeable (porous) membrane to separate particulate matter from soluble components in the carrier fluid, such as water. In Pall Aria systems, microfiltration membranes act much like a very fine sieve to retain particulate matter, while water and its soluble components pass through the membrane as filtrate, or filtered water.

The retained solids are concentrated in a waste stream that is discharged from the membrane system. The pore size of the membrane and the integrity of the sealing mechanism control the fraction of the particulate matter that is removed. Microza membranes, with their fine pore size and absolute seal, remove virtually all of the fine matter, such as silica, bacteria, and parasite cysts.

Pall Aria water treatment systems are used in a wide range of applications from the filtration of ground and surface waters for drinking water supply and industrial uses, and secondary polishing wastewater effluent for reuse.

Pall Membrane Microbial and Particulate Removal

Contaminants	Typical Removal *	
	Microfiltration(MF)	Ultrafiltration (UF)
Giardia	>6 (log)	>6 (log)
Cryptosporidium	>6 (log)	>6 (log)
MS2 Coliphage or Bacteriophange	0.5 - 2.5 log **	4.5 - 6 log **
Turbidity	<0.1 NTU	<0.1 NTU

* Based on third party testing
** Virus removal varies depending on coagulation process upstream of system

Ground Water

- Lowers turbidity and removes microbial pathogens from ground water under the influence of surface water.
- Removes iron and manganese with oxidation.
- Removes arsenic with coagulation.

Surface Water

- Lowers turbidity and removes microbial pathogens from raw water drawn from rivers, streams, lakes, and reservoirs.
- Removes organics with coagulation to improve disinfection by-products rule compliance, taste and odor.

Secondary Wastewater Effluent

- Removes suspended solids and reduces SDI prior to RO treatment for reuse.
- Removes bacteria and other pathogens, and suspended solids to produce water suitable for landscape irrigation and similar reuse applications.
- Removes Phosphorous with coagulation.

PALL Water Processing

Features & Benefits of the Pall Microfiltration Systems

- High Quality Treated Water

Pall's Microfiltration System is a cost effective method for the removal of micro-solids and is particularly recommended for treatment of the following contaminants in water:

Feed Water Element	Treated Water Quality
Giardia and *Cryptosporidium*	Undetectable
Suspended Solids	Undetectable
Turbidity	< 0.1 NTU

Pall has successfully completed the test program for certification by California Department of Health Services of its 0.1-micron microfiltration system. NSF under Standard 61 has certified our microfiltration systems.

- Advantages of Microza Microfiltration (MF) "Outside-In" Membrane

  - The 0.1-micron rating of the medium assures the finest protection for the downstream systems, reduced downtime and maintenance costs and extended service life of the possible future reverse osmosis modules. Provides narrow pore size distribution for excellent effluent quality
  - The hollow fiber membranes have extremely high permeability, which facilitates automated, clean-in-place regeneration via reverse flushing, and permits operation at high flux thereby reducing equipment cost
  - The membranes permit operation at high chlorine residuals to minimize bio-fouling rates and extend process time between chemical cleanings

- Robust Membrane & Sturdy Module

The microfiltration modules use a proprietary PVDF (Polyvinylidenefluoride) hollow fiber membrane technology and advanced bonding techniques. This creates an exceptionally robust membrane and sturdy module.

The Microza Microfiltration modules are specially designed for municipal drinking and wastewater processing applications. These modules use proprietary, 0.1 micron rated PVDF (Polyvinylidenefluoride) hollow fiber membrane technology that support high and stable flux rates and constructed with advanced bonding techniques for an exceptionally strong module design.

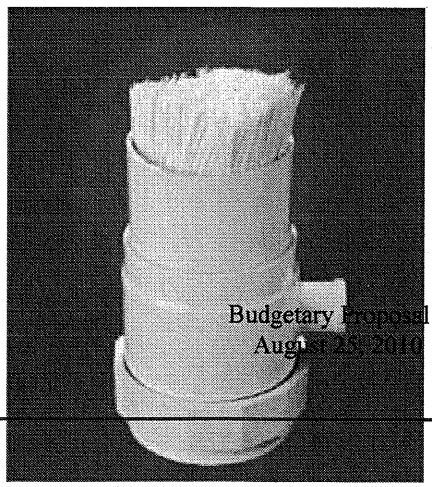

- Membrane Material: PVDF

- Pore Rating: 0.1 micron (µm)
- Fiber OD / ID: 1.3-mm/0.7 mm
- Active Filter Area: 538 ft2
- Module Size: 6" diameter x 79" long
- Housing: ABS
- Gasket: EPDM
- Potting Material: Polyurethane

Pall's family of hollow fiber membrane systems were the first "full systems" to be listed in accordance with ANSI/NSF 61 specifications. The Pall Aria system is manufactured from NSF approved materials and meets all requirements for potable water service.

- Operational Flexibility

The Pall system is designed to produce a consistent quality of water irrespective of seasonal and weather related variations in the source raw water quality.

- Operational Simplicity

The microfiltration process is an easy and inexpensive system to operate both in terms of maintenance costs and manpower requirement. The operators are required to ensure they maintain proper membrane permeating conditions.

- Compact System Footprint

The Pall Microfiltration System is physically compact. This allows the purchaser to realize savings in physical plant size and hence installation costs.

- Chemical Resistance

The MF membrane is resistant to chlorine in concentrations as high as 5,000 mg/L during cleaning. Pre-chlorination of the raw water is acceptable. This precludes the need for adding chemical such as bisulfite in a subsequent de-chlorination step. Chlorine resistance also allows for easy disinfection of the membrane and the system should this be required.

Pall Microfiltration / Membrane Compatibility

Chemical	Condition	Compatibility

	Concentration	Temperature	
Sodium hypochlorite	1 %	25	Excellent
Hydrogen peroxide	2 %	25	Excellent
Formaldehyde	3 %	25	Excellent
Ethanol	100 %	25	Good[1]
Caustic soda	1 N	25	Excellent[2]
Caustic soda and Sodium hypochlorite	NaOH (1N) NaClO (0.5%)	25	Excellent
Nitric acid	1 N	25	Excellent
Hydrochloric acid	1 N	25	Excellent
Sulfuric acid	1 N	25	Excellent
Glycerin	100 %	25	Excellent
Chlorinated solvents		25	Not compatible
Aromatic base solvent		25	Not compatible
Ester base solvents		25	Not compatible
Ether base solvents		25	Not compatible
Ketone base solvents		25	Not compatible

NOTE: 1. Compatible up to 30 days exposure

2. Use of caustic soda alone will result in the slight discoloration of the membrane and extraction of F^- ion; however, there is no deterioration in the physical properties of membrane. Therefore, the cleaning of module by caustic soda alone should be limited and use of caustic soda with sodium hypochlorite is recommended.

Standard Components

A standard Pall Aria AP system consists of an inlet modulating feed valve, feed/recirculation tank, one feed pump with VFD, , reverse filtration (RF) tank, one RF pump with VFD, manual and automatic valves, filtrate flow meter, pressure and temperature sensors, PLC control, control panel, and a painted carbon steel frame and a separate EFM/CIP Warm Water Skid with Chemical Injection Other items can be added on request.

- Painted Carbon Steel Frame
- 316 SST Pumps W/TEFC Motors and VFDs
- PVC and HDPE Piping
- Butterfly Valves (Manual and Air Operated)
- PE Tanks with Level Control
- EFM/CIP Warm Water and Chemical Injection System
- PLC Controls and Software
- Instrumentation (Digital and 4-20 ma Analog Signal)
- NEMA-4 Electrical Enclosures

Optional and Auxiliary Equipment

- Modem for Remote Access
- Auto Dialer for Alarms
- PC for Operator Interface Terminal and Data Acquisition
- Feed or Filtered Water Turbidimeters
- Oxidant Dosing Systems
- Air Compressor Systems
-
- Disinfectant Dosing Systems
- Coagulant Dosing Systems
- Chemical Neutralization Systems
- Backwash Recovery Systems

Auxiliary equipment to improve treatment capabilities is available on separate skids, which are equipped with distributed controls that can be integrated into a master control system to provide optimal, automatic integrated system operation.

Operating Conditions

Maximum Inlet Pressure: 44 psi (3 bars)
Maximum Operating Temperature: 104°F (40°C)
Minimum Operating Temperature: 33°F (1°C)

Water Supply for CIP: 90-95°F (32-35°C)

ISO 9000 Certification

Pall's North American manufacturing, engineering, sales and marketing operations have received ISO 9001 registration from Lloyd's Register of Quality Assurance Limited. ISO 9001, which also covers design and development functions, represents the highest, most comprehensive level of ISO 9000 Certification. The quality system and procedures are regularly audited to assure compliance and proper record keeping before the certification is renewed.

1.2 Microfiltration System - Operation

A microfiltration system is composed of a certain number of racks or ARIA Units working in parallel.

The Microza Microfiltration Modules operate in an outside-in mode. In conventional filtration or single pass filtration, the membrane filter is perpendicular to feed flow direction. Solids are dead end filtered by the media and are generally removed when the filters are backwashed.

For Microza modules, the membranes are placed parallel to the feed direction and only clean liquid passes through the membrane.

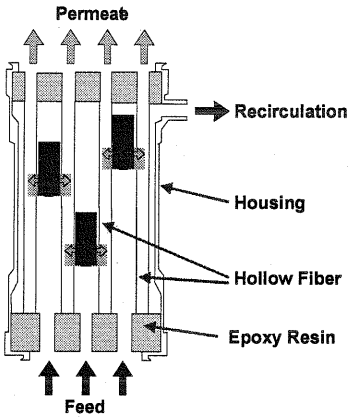

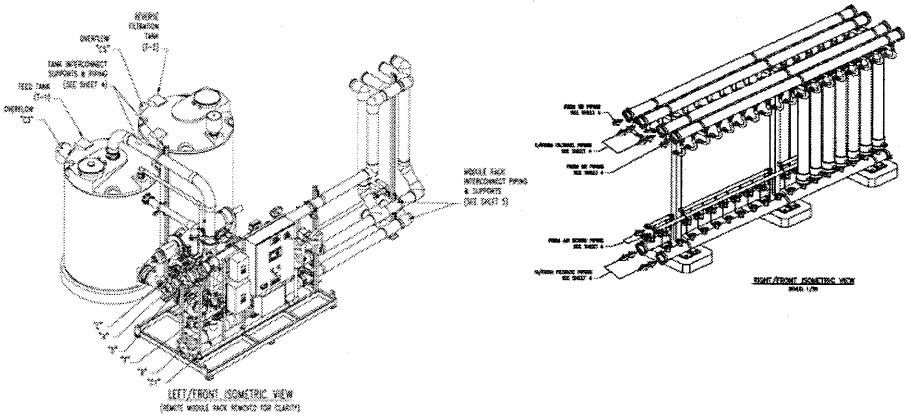

On-Skid Prefiltration

Pall Aria water treatment systems provide reliable, low maintenance performance. A 300-µm automatic-backwashing strainer is included on the AP system skid to prevent debris from clogging small passages in the system.

Water is pumped from the feed tank through pre-filters into the module-rack holding the Microza Microfiltration Modules.

Filtration (Normal Production)

The feed pumps are controlled to maintain a variable feed pressure. As water flows through each module, the module filaments will gradually foul, and the pump speed will increase automatically to increase feed pressure as required to maintain the filtrate flow set point. At the same time a control valve at the inlet to the unit adjusts to maintain a constant level in the feed tank.

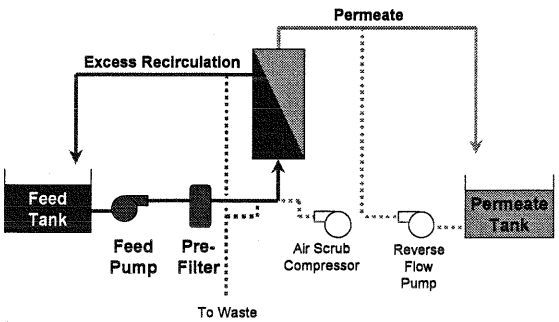

Feed water enters the bottom of the module and is distributed uniformly to the outside of the fibers. Since it is under pressure, the water passes through the hollow fiber membranes and filtered water exits from the top of the module. Under normal conditions, all of the feed water flows through the membranes and exits as filtered water. Depending on feed quality, a small amount of the feed water may be circulated past the outside of the hollow fibers. This flow prevents the accumulation of foulants and debris on the surface of the membrane and helps evenly distribute flow though the membrane fibers.

Reverse Filtration & Air Scrub (Typical)

As water is filtered, rejected particulate accumulates in the module or on the membrane fiber's surface. The effect is a flow restriction in the module, resulting in an increase in trans-membrane pressure (TMP). Air Scrubbing (AS) is a mechanical process to remove the debris from the module and decrease the rate of overall increase in trans-membrane pressure.

Periodically, the module racks will go through a combined reverse filtration (RF), air scrub (AS) cycle that cleans the modules. AS is usually initiated at a preset interval of water throughput, or at a specified time interval. The air injection valve opens and air is injected at low pressure into the feed side of the module. First, isolation valves are closed then RF backwash valves open.

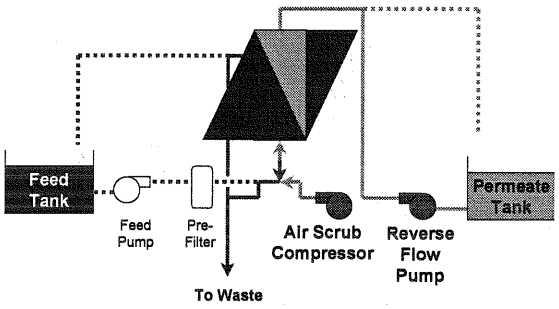

The RF pump, which takes filtrate from the RF Tank, modulates to maintain the RF flow set point, at which time clean filtrate is pumped through the module filaments in the reverse direction.

This flow is combined with compressed air and is maintained for a short period of time and is diverted to the drain. As the air bubbles up the outside of the fibers it air shakes them vigorously, loosening particulate adhering to the fiber skin.

To complete the cycle, a forward flush (FL) is implemented, circulating feed water from the feed tank on the outside (feed side) of the membrane fibers at high velocity. This fast flow of liquid is directed through the excess recirculation port of the module to drain. This further dislodges and removes from the module debris that was captured by the membrane fibers.

This fully automated cycle is included in every Pall Aria System and occurs every 20-120 minutes, and stops forward filtrate flow for about 1.5-2 minutes.

Enhanced Flux Maintenance (EFM)

To assure maximum efficiency and lowest total cost of ownership, Pall has developed techniques to keep the membranes free of fouling materials. EFM is a patent pending, fully automated process that uses warm water with mild chemical solutions tailored to specific foulants that may be present in the application on a daily basis. EFM is used to reduce the times when a partially fouled membrane results in a system operating at less than peak efficiency.

The benefits to using EFM are a smaller system footprint, which reduces floor space and facility heating and cooling costs, and a lower average trans-membrane pressure, which reduces pumping energy.

The durable, strong and chemical resistant hollow fiber that is incorporated into every Pall Aria System makes this possible. Best of all, it can be subjected to thousands of EFM cycles with no reduction in service life.

In addition, the flexible, control system on-board the Pall Aria System allows EFM to be enabled only when warranted by feed water conditions.

The EFM or "chemical soak" lowers the daily TMP rise and assists with reducing the system's trans-membrane pressure. This cycle is an automated procedure and can be utilized daily or weekly depending on solids loading and quality of feed water. Below outlines the typical steps involved with the procedure.

The filtration system is equipped with a CHN (Chemical, Hot Water, Neutralization) system that will allow an Enhanced Flux Maintenance (EFM) procedure to be initiated that will provide a more rigorous flux maintenance cleaning.

This procedure will typically extend the time between full CIP (Clean-In-Place) cleaning cycles and is therefore preferred for wastewater, surface water with organics, and other difficult applications. In this fully automated procedure, the system is drained, then warm water is transferred from the CHN skid to the AP feed tank while a chemical cleaning solution (typically 500 ppm NaOCl) is simultaneously injected. Once the proper quantity of cleaning solution is available in the feed tank, the solution is re-circulated through the feed side of the membranes for 10-30 minutes to remove accumulated debris on the membrane surface. The solution is then drained to waste and the system is rinsed.
Upon completion, the system goes back to the normal filtration mode. The total cycle takes 60-90 minutes. The EFM procedure is typically initiated by volume of water processed or at a specific time interval

Chemical Clean In Place (CIP)

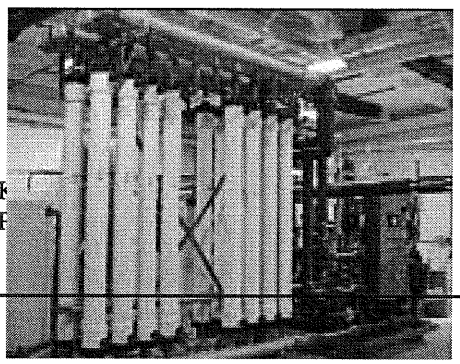

Backwash and EFM are designed to remove particulate matter and foulants. In most applications, it will occasionally be necessary to perform a complete CIP process. Over time, foulants that cannot be removed by normal air scrub/backwash

procedures will cause the trans-membrane pressure (differential pressure across the membrane) or TMP to increase to the point where chemical cleaning (CIP) is required (35 psi).

This typically occurs every 30-90 days, depending on the water quality and whether an optional EFM (Enhanced Flux Maintenance) procedure is being used. In order to maintain module warranties, the system must undergo a full CIP at least once every three months. Once the TMP increases above 35 psid, an alarm will flash on the Human-Machine Interface (HMI) screen notifying the operator that the system requires chemical cleaning.

The CIP process is a 2-step protocol using an acidic solution and a caustic solution with chlorine. Included in this section is a more detailed description of the cleaning procedure.

The standard for Pall systems is one wash of a mixture of 1% caustic (NaOH) and 1000-ppm hypochlorite (NaOCl) and a second wash with 2% citric acid. Other cleaning solutions may be used for atypical foulants. During this procedure, the system is drained and warm water is added (approx 95 – 100 deg F) to the feed tank from a warm water system (CHN Skid) supplied by Pall.

The first wash chemicals are automatically injected into the warm water from the CIP transfer system. The solution is then re-circulated through the feed side of the membranes for an operator-adjustable period of time. The solution is drained to waste and the system rinsed with cold water. The procedure is repeated for the second wash.

After rinsing to a satisfactory pH in the rinse water, the system undergoes a Reverse Flush (RF) and returned to service. The CIP operation typically lasts about 4-6 hours. Since CIP is expected to occur relatively infrequently, the procedure is semi-automated, with the system's HMI program prompting the operator through the necessary steps to complete the procedure.

This process will return the modules to "nearly new" condition and can be performed hundreds of times over the life of the modules.

Description of Integrity Test Procedures

Integrity testing of hollow fiber microfiltration is conducted in accordance with standardized procedures developed at Pall Corporation. These methods have been optimized for modular installations and have proven successful in detecting an integrity breach in system modules consisting of over hundreds of thousands of hollow fibers.

In operation, the filtrate quality is constantly monitored to immediately detect a performance change at the system level while an off line pressure hold test provides the ability to isolate and identify a questionable module. These easily implemented procedures ensure system reliability without adding an extensive cost (capital or operating) and maintenance burden on users.

Several methods are employed to monitor membrane integrity and treatment reliability. The integrity monitoring methods used on our system include:

- Air-pressure-holding testing
- Turbidity monitoring

At an adjustable interval, as determined by the operator and programmed into the HMI, the system automatically performs an air pressure hold test on a block of modules. First all valves are closed on one block. The filtrate side of the modules is vented, while air is introduced on the upstream side. The air displaces the water in the modules until empty, at which time the pressure attains its set point. The air is then shut off and the rate of decay of the pressure is monitored. If broken fibers are present, the decay rate will be faster than acceptable and the system will alarm.

Upon detection of broken fibers, an air leak test is performed on all modules.. For the air leak test, the feed side of the module is drained and air is introduced. A visual test can be performed while air is introduced in the feed. When air bubbles on the filtrate side is observed in the clear coupling located at the top of each module, the damaged module is repaired by inserting a stainless pin into any damaged fibers and the system is brought back on line.

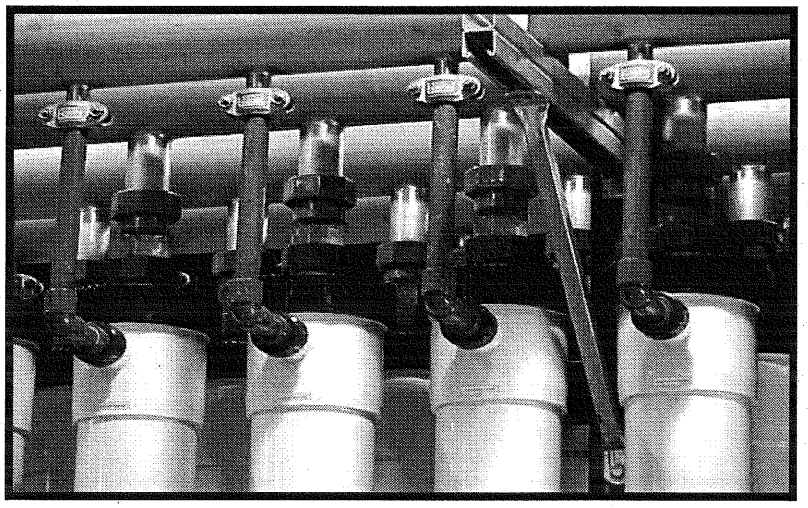

The air pressure holds and air leak tests are effective means of ensuring membrane integrity. These methods are widely accepted and used throughout the industry, and can guarantee the removal requirements of the Surface Water Treatment Rules (SWTRs). Training on the pressure hold test and air leak test will be provided onsite.

Even though less sensitive, turbidity monitoring is an indirect method of continuously assessing the membrane integrity by using turbidity as a surrogate.

On-line turbidimeters can be connected to the membrane filtration effluent lines to monitor the performance of the membrane system. Data from the on-line turbidimeters can be displayed by the PLC.

Wastewater Disposal

The RF and AS wastewater and CIP wastes can be discharged to a sanitary sewer if available; in areas without sanitary sewers, the RF and AS wastewater can be discharged to a settling pond to remove

suspended solids. The clarified supernatant may be discharged to a local receiving stream or recycled to the plant feed water. Pilot testing may be required before recycling the supernatant. If sanitary sewers are unavailable, CIP wastes should be combined and neutralized prior to collection and disposal by a waste hauler. These wastes can be disposed of like septic system sludge. The customer is responsible for contacting the local regulatory agencies and obtaining the appropriate permits and approvals before initiating any discharge of process wastewater.

1.3 Advantages of Pressure MF Systems Over Vacuum Systems

Two types of membrane systems are available today, "pressure systems" and submerged systems, also known as "vacuum systems."

These types of membranes are commonly manufactured in a hollow-fiber configuration. In a pressure system, feed water is forced through the membrane pores by a pressure pump. In a submerged system, the membranes are not placed in a housing or vessel, but placed in a basin or tank that is often open to atmosphere. In this type of system, filtrate is drawn through the membrane via a vacuum pump.

Though both are capable of delivering the benefits of membrane technology, pressure systems offer some inherent advantages over vacuum systems. These advantages are highlighted below:

Range of pressure

Pressure systems operate within a greater range of operating pressure, resulting in some advantages over vacuum systems. A limitation of vacuum systems is that they can operate only within the range of atmospheric pressure, typically operating at pressures approaching 70% of the maximum pressure differential available (10-11 psid).

Pressure systems, on the other hand, rely on a greater reserve of pressure should upset conditions occur in the system, operating at 40 to 50% of the maximum transmembrane pressure (16-20 psig) when tested on the same waters. This builds an intrinsic safety factor into a design that allows the pressure system to better cope with process upset, changes in influent water quality or any other changes in plant operation.

Pressure systems are also immune to the impact of temperature changes that affect vacuum systems. During winter, for example, feed water temperatures drop, which increases viscosity and the pressure required to force water through a membrane pore. Because absolute vacuum is - 14.7 psig, the operating pressure of vacuum systems can never exceed 14.7 psi. In most cases, the maximum available pressure is -12 psig, which may be even less at higher elevations.

This means vacuum systems must be designed at much lower fluxes than pressure systems. By their nature of operation, pressure systems operate in a much wider differential pressure range (0-40 psid), thus allowing them to provide consistent water flows regardless of feed water temperature.

Improved cleaning

Pressure systems offer safer, more reliable cleaning operations than submerged systems. In pressure systems, cleaning chemicals are entirely contained within the membrane modules, or chemical tanks, virtually eliminating the risk of exposure to both the chemicals and the fumes they may generate.

In contrast, fumes from the open tanks of submerged systems often require complex and expensive ventilation systems, for both the safety of operators and the longevity of the facility housing the membrane system, as the fumes can corrode metal buildings or structures within the treatment plant.

Cleaning chemicals and any fumes they may generate are more easily controlled in the closed loop system of the pressure membranes.

An additional benefit of pressure systems is that their closed design makes them resistant to tampering or outside contamination, either accidental or deliberate. Process water is completely insulated through the membrane filtration process in pressure systems, unlike vacuum systems where process water is filtered from large open tanks. It is very difficult for accidental spills to contaminate finished water in pressure membrane filtration. By contrast, in vacuum systems, any contaminant dissolved or smaller than the membrane pores that is spilled into the open tanks can contaminate the filtered or treated water.

In the end, the closed design leverages these inherent advantages to deliver higher levels of safety and security than the submerged system.

More reliability

Integrity testing is critical to ensuring product quality, and pressure systems have several advantages over vacuum systems when it comes to integrity testing membrane fibers. Pressure systems use the highly automated and widely accepted "Pressure Decay Test," which examines the filter during the diffusive flow portion of the flow curve. Membrane fibers can be pressurized at more than two-and-a-half times those in a vacuum system, enabling small breaches of membrane integrity to be detected much more easily and rapidly than in vacuum systems.

These points regarding integrity testing become even more critical in light of the U.S. EPA's proposed Long-Term 2 Enhanced Surface Water Treatment Rule, released for public comments in 2003, which requires membrane systems to undergo direct integrity testing and continuous integrity monitoring for compliance. Among the performance criteria specified are that testing frequency shall be no less than once per day, and that direct integrity testing is able to detect a breach equal to or less than 3μ.
In a pressure system, each module is equipped with a clear coupling on the filtrate side of the module, allowing the plant operator to quickly identify the module with the broken fiber. In the rare instance where a membrane integrity breach occurs, fiber repair can be done onsite without removing the module from the rack, typically taking less than 15 minutes.

As an illustration of fiber reliability, a Pall installation in California has experienced only four fiber breaks in two years with a flow rate of 20 MGD.

In vacuum systems, tracing back to the individual module where a membrane integrity breach occurred is more difficult and time consuming. In the event of a broken fiber, a rack of modules has to be lifted out of the basin, and the damaged module has to be removed for repair.

Piping leaks in pressure systems, being under positive pressure, are easily detected and addressed. Because vacuum systems are under negative pressure, they will leak from out to in, making leak detection much more difficult.

This problem is further compounded by the fact that there is a continuous concentration of contaminants over the course of a day in the entire plant, as well as from the first train to the last. Any leak in the membrane means extremely dirty water will contaminate the filtrate.

Lower costs

Pressure systems deliver lower total costs than vacuum systems when users take into account operations, construction and equipment. A major reason for this is that pressure systems typically require a much smaller footprint than comparable vacuum systems. Recent bids have shown that pressure membrane systems, with their compact, skid-mounted and modular design, offer the smallest system footprint among all the major membrane systems in the industry.

The larger operating pressure range that pressure systems offer and makes the high priority of the Microza membranes it possible to design them at much higher fluxes. This translates to less membrane surface area, fewer membrane modules, and consequently, lower costs. Continuing process optimization and advancements in treating different types of waters have enabled pressure systems to deliver lower operating and maintenance costs than submerged systems.

Because pressure membrane systems are designed as modular units, there's no need for costly permanent hoisting equipment. Membrane modules are manually installed. In instances where a module needs to be removed, the specific module rack is isolated, and a single operator without the need of any module removal equipment can quickly remove the module.

Vacuum systems, on the other hand, require a permanent hoisting mechanism to remove or put in place membrane cassettes, adding size, cost and complexity to the system design. Vacuum systems also require expensive basins that demand either major excavation work or a taller building than pressure systems, which require only a concrete slab.

Final analysis

Membrane pressure MF systems are commercially viable and competitive with vacuum systems in water processing plants, offering many advantages over vacuum systems that are not always incorporated into the economic evaluations.

However, these advantages will improve plant operation, facilitate equipment maintenance and ensure that effluent water quality meets requirements.

Pall has a continuous process improvement program to advance the capabilities of pressure systems. These improvements leverage the available pressure of pressure systems and have enabled higher operating flux rates, which in turn enable smaller and more cost-effective systems. Operating protocols are constantly being upgraded for all cleaning processes, which can further reduce operating costs.

SECTION TWO

Overview of Pall Corporation

2.1 Executive Summary

Pall Corporation is the world's largest supplier of filters, filter systems and fluid purification equipment. We focus our strengths on advancing the state of the art in separation technology in thousands of diverse applications. We owe our success to developing products that offer our customers optimal value and economy of use.

For the treatment of surface waters use, Pall Corporation offers our Microza hollow fiber filters that are available in ultrafiltration and microfiltration ratings. Our proposal is designed around our 0.1 micron PVDF hollow fiber; however, Pall is unique in that we offer filtration products from Reverse Osmosis through coarse filtration.

2.2 Membrane Experience and Qualification

Over three hundred membrane plants have been installed worldwide.

All of our systems have shown excellent performance, reliability, and cost-effectiveness

Microfilters have been successfully tested and installed in a wide range of applications, including:

- Surface waters (reservoirs, lakes, and rivers)
- Secondary Wastewater Effluent and Pre-RO Applications
- Coagulated and clarified surface water
- Ground water with iron, manganese and arsenic
- Waste filter wash water from conventional granular filters
- Drinking water from an open, finished storage reservoir

2.3 Corporate Philosophy

Pall is a two *billion-dollar* corporation with manufacturing, sales, marketing, engineering, and technical support throughout the world. We have over 50 years of experience in thousands of successful installations using state-of-the-art filters to remove contaminants from liquid and gas streams. The cornerstone of Pall's philosophy is service to customers. This extends beyond product quality and prompt delivery to problem solving, system recommendations and the sharing of scientific information.
Our charter is clearly stated in our latest Annual Report. "Pall Corporation is committed to being the preeminent supplier of filtration products within each geographic area and industry it serves. We enter only those markets where we can provide superior products that are recognized by our customers as delivering clear and compelling benefits. Pall products and support services provide users with the

most economical and reliable solution to their filtration and separation requirements. We call this standard *"Absolute Performance."*

We serve customers who must remove contaminants from gases and liquids used to produce their products. Across a wide array of industries we adopt a "systems" approach to filtration that takes into account ever tightening environmental regulations, with economy of use and the push for finer particle removal. By design, our filters minimize waste and reduce operator exposure to hazardous materials.

We designs and manufacture our own media, elements, vessels and fully integrated separation systems. We provide expert engineering, applications and system design assistance and technical support. Since we supply the broadest array of polymeric, glass, metallic and ceramic filters to industry, we select the optimum filter medium that meets specific customer requirements. Our internal research and development organizations are continually developing and testing advanced filtration membranes for new and challenging applications.

While our strategies for meeting customer requirements may vary in different parts of the world, our guiding philosophy is consistent. Our global network of employees, sales distributors and manufacturing facilities is made up of highly trained professionals with a focus on ***Absolute Performance.***

Each Pall manufacturing facility adheres to uniform manufacturing procedures. Our manufacturing facilities, research and development and scientific laboratories in Europe and the USA have been granted International Standard Organization (ISO) certification to the ISO 9001 Quality Management System. No matter where in the world you order Pall filters, you can be assured they will perform exactly as specified.

In many different markets, Pall Corporation has formed alliances with leading companies to provide advanced solutions to customers' purification challenges. We design and build products that offer superior performance and economical operation. Through strategic alliances, we can provide customers unique value that makes our alliance partners more competitive. For microfiltration hollow fiber systems, Pall has an alliance with Asahi Kasei Chemical to supply systems that are more economical than other available technology. The strengths of both companies ensure a successful system design with good operational performance.

Many alliance partners select Pall as an alliance partner because we are the leading filter manufacturer in the world. Not only are we the leading manufacturer of high technology filter products, but Pall also has the resources and the commitment to continually developing new leading edge products.

2.4 Customer Service

Pall Corporation's Scientific and Laboratory Services (SLS) Department is structured to work closely with our customers to identify and evaluate filtration needs, conduct feasibility studies, test filtration effectiveness for a given application/product combination, determine compatibility of our filter

systems with the process conditions and to provide a myriad of other services designed to support our products.

The SLS Department is fully staffed with scientists, technicians and engineers with specialized knowledge in process filtration. Test work is conducted both in the lab and at the customer's site. Pall's SLS Department has dedicated the services of a Technical Director with specific focus on the pretreatment of water for process and municipal applications with a support staff of engineers and technicians.

Pall's Water Processing Division has the technical and structural organization to respond to critical opportunities worldwide. We utilize the expertise of key senior people from our Scientific & Laboratory Services Department, Manufacturing, Design, Engineering and R&D, as an integrated team to respond quickly to customer needs.

2.5 Quality Management Systems

Pall Trinity Micro North American Manufacturing, Engineering, Sales and Marketing Operations have received ISO 9001 registration from Lloyd's Register of Quality Assurance Limited. ISO 9001 covers design and development in addition to all of the Manufacturing, Sales and Marketing functions. This represents the highest, most comprehensive level of the ISO 9000 Certification.

This compliments our extensive ISO 9000 Certifications by the same registrar for several Pall groups worldwide. This is independent recognition that Pall's quality systems are designed to meet customer requirements, worldwide. The registration signifies that an authorized certification and audit form has reviewed Pall's quality system and procedures for compliance with terms of the 9001 standard of the International Organization for Standardization, and found that it satisfies those requirements. Our customers, who have their own formal quality programs, find it very beneficial when their vendors, such as Pall, have ISO 9001 certification, as it denotes quality in supplied products and minimizes the amount of auditing they must do.

The ISO 9001 certification includes design and development functions and is the most comprehensive of the ISO standards. Some companies have obtained only ISO 9002 Certification, which does not include the design and development programs.

2.6 Quality in Engineering

The Pall Process Group's Quality Management System covers all aspects of the activities performed to satisfy Customer requirements. The overall Quality System provides assurance procedures to ensure Conformance to Customer requirements from Order Entry through shipping of final product. The Quality Management System complies with ISO 9001; ANSI/ASQC Q91; ASME/ANSI NQA-1; 10CFR50, Appendix B; MIL-1-45208A; and for ASME Code Vessels - the ASME Boiler and Pressure Vessel Code Section VIII, Division 1.

All items procured for the Manufacture/Fabrication of Customer orders are obtained from the PALL selected jointly by Purchasing and Quality Assurance - based on an evaluation of their capabilities to provide items and services in accordance to specified requirements.

Prior to release for Fabrication, all procured items are verified for conformance via either Source Evaluation or Incoming Receiving Inspection. Activities (Manufacturing/Fabrication Operations) affecting Quality are performed in accordance to documented instructions, procedures, specifications or drawings.

Qualified individuals at incoming, in process and final inspection, perform inspection, examination and other forms of verifications to establish plans.

All inspections, and/or examinations are performed using specified instructions such as drawings, specifications, operating procedures or inspection method sheets. All gages and instruments used for these verifications are calibrated and controlled by the Calibration Laboratory. All calibrations are traceable to standards established and controlled by the natural constants or ratio methods traceable to the National Institute of Standards and Technology (NIST).

The Quality Management System is constantly monitored by planned and scheduled audits performed to verify compliance. These audits are performed by qualified Internal Auditors independent of the areas audited. The Internal Audits are assured to measure and set forth any Corrective Actions required enabling the effective implementation of the program/processes.

SECTION THREE

Technical Specifications

3.1 Microfiltration System

3.1.1 Scope of Supply – PALL

The equipment proposed is designed for simplicity of operation. All plant operations are automatically controlled via a PLC. There are no routine operations that require manual operation of valves etc. The system design philosophy is to reduce as far as possible the potential for system problems caused by operator error. Installation of the system will be by others with construction technical advice provided by Pall. The main equipment included with the Microfiltration System is listed as follows (detailed equipment specifications are included in Section 3.2 of this proposal):

UAria Packaged System

Each Aria AP-6 system consists of:

- Skid Mounted Aria AP-6 Unit
- Off-skid module rack (assembled at site)
- 32 Microfiltration Hollow Fiber Modules per each AP-6 unit
- 1,100 Gallons Feed/CIP Tank Off-Skid
- Feed Pump with VFD - built into each Aria Unit
- Pre-Membrane Strainer - 300 Micron, built into each Aria Unit
- 1,100 Gallons RF Tank Off-skid
- Hach 1720E or 660 LaserTrack Turbidimeters
- RF Pump with VFD - built into each Aria Unit
- Control PANEL (Flex™ I/O blocks in each additional panel)
  - Disconnect and Q-Stop button
  - PanelView™ 700+ OIT
  - ControlLogix 5000 Series PLC
  - Ethernet
  - Devicenet

Support Skids and System Components:

- EFM/CIP System
- EFM/CIP Chemical Transfer

Optional System Components

- Compressed Air System (compressors and instruments, shipped loose)
  - Atlas Copco GX Series Full Feature Compressor
  - 1 receiver ASME coded for 200 PSI
- UPS to protect PLCs and PC
- Alarm Dialer
- Chemical Neutralization Skid
- Backwash Recovery Systems

- Desktop Computer
  - Dell Dimension Series
  - RS View 32 HMI
  - Data Reporting Excel Spreadsheet
  - Remote monitoring via PC Anywhere

Services and Other Items Provided

- Equipment General Arrangement Drawings
- Detailed Operating & Maintenance Manuals
- Start-Up Assistance: Typically 1 trip and 5 Days in total for each AP Skid.

3.1.2 Scope of Supply - OTHERS

The following items are to be supplied by others and include, but is not limited to the following:

- Overall plant design.
- Design and supply of all yard piping (raw, potable, residual), valves and instrumentation.
- Design, supply & installation of interconnecting piping
- Design supply and support of all pipe support for field piping except the Pall Valve Rack and module rack.
- Design and supply of raw water treatment facility (if required)
- Design and supply of electrical conduit schedules
- Design and supply of electrical control room, service disconnects, compressor room, control room and other facilities, platforms, walkways, etc
- Design and supply of heating, ventilation, and air condition (HVAC) and plumbing (potable water, equipment drain and sanitary lines) for facility
- Design of operator interface screens outside of membrane equipment supplier scope of service
- Receiving and safe storage of equipment until ready for installation.
- Design and supply of air piping, supports etc. from the air compressor systems to the main instrument air supply header located on the skids.
- Bulk chemical storage facilities, etc
- Any on-site painting or touch-up painting of equipment supplied.
- Approval Permits
- Supply and installation of all required flexible connectors
- Assembly and installation the module rack
- Installation of all equipment

3.2 Equipment Technical Specification

The following sections provide a description and specifications of major components incorporated into the Microfiltration system.

3.2.1 Membrane Systems

Skid Mounted Aria Units are supplied complete with pre-filters, feed and RF tanks, feed and RF pumps, valves, controls, instrumentation and other associated ancillary equipment and instruments.

Standard Components:

- Painted Carbon Steel Frame
- 316 SSH Pumps w/TEFC Motors and VFDs
- Keystone Butterfly Valves (manual & air operated)
- Strainer
- HDPE Tank
- PLC Software & Controls
- NEMA 4 electrical enclosures

Aria packaged AP™ Specifications

	AP-6
Type	Microfiltration Package Plant
Manufacturer	Pall Corporation
Microza MF Modules	
Number of modules per unit	32
Dimensions	6" diameter x 80" long
Removal Rating	0.1 μm
Membrane Material	PVDF
Fibers Per Module	~ 6,350
Strainer	
Type	Filtomat 104C Auto-Backwash

Wetted Parts	SST, NSF Approved Coatings
Screen Size	400 Micron
Feed Pump	
Type	316L Stainless Steel SSH
Manufacturer	Goulds G+L
Model	SSH/23SH - #23SH1Q5HO
Quantity	1 per AP-6 unit
Horsepower	30
Voltage	460/575 V, 3 phase, 60 Hz
RF Pump	
Type	316L Stainless Steel SSH
Manufacturer	Goulds G+L
Model	SSH/6SH #6SH1N5D2,F2 JBOX
Quantity	1 per AP-6 unit
Horsepower	20
Voltage	460/575 V, 3 phase, 60 Hz
Feed Tank Specifications	
Material	HDPE
Manufacturer	Snyder
Quantity	1 per AP-6 unit
Volume	1,100 Gal
RF Tank Specifications	
Material	HDPE
Manufacturer	Snyder
Quantity	1 per AP-6 unit
Volume	1,100 Gal

3.2.2 Compressed Air System

An air compressor system may be provided as an option to meet the air requirements of the ARIA™ AP systems. A typical system consists of a rotary screw compressor (often dual for redundancy) and a receiver tank, along with associated filters, gauges, relief valves, drains, etc., required for a complete air supply system. A Pall Applications Engineer will determine the compressor and receiver tank best suited for the application. The compressors, receiver, and external filters are shipped loose to allow versatility in installation.

The Pall standard compressor is the following:

Manufacturer	Atlas Copco
Model	GX – series Full Featured w/Enclosure
Type	Single Stage Oil Flooded Rotary Screw
Features	Inlet Air Filter

Integrated Refrigerated Dryer
TEFC Motor
Differential Pressure Oil System with Oil Cooler Air/Oil Separator and Oil Level Sight Glass
Oil Filter
V-Belt Drive with Tensioning Device
Load/No Load Capacity Control
Sound Attenuating Enclosure - CSA/UL Appr.
Factory Oil Fill-Food Grade Oil
Electro-pneumatic start/stop control
Motor Starter Mounted and Prewired
Emergency Stop Button
After-cooler & Moisture Separator
Dew-point Gauge
Sound level ≤ 70 db

External Filters (installed separately)

DDX Coalescing Filter	0.1 ppm oil/water, 1 micron filter
PDX Coalescing Filter	0.01 ppm oil/water, 0.01 micron filter

Receiver

Manufacturers	Silvan or Manchester
Type	Vertical
Rating	ASME Coded 200 psi
PRV	¼-inch 200 psi 178 scfm
Pressure Gauge	4-inch 0-200 psi
Drain Valve	½-inch ball valve

3.2.3 Chemical, Hot Water, Neutralization (CHN) Skid

A CHN (Chemical, Hot water, Neutralization) system is provided. This system provides the following:

1. Warm water for CIP (Clean-In-Place) operations.
2. Provides EFM (Enhanced Flux Maintenance) capability.
3. Provides automatic injection of CIP chemicals.
4. Provides capability for automatic injection of chemicals to neutralize the CIP waste if an optional Neutralization System is purchased.

This system generally includes: a tank with recirculating heater, level control and temperature transmitter, a supply pump to transfer the water to the AP system feed/recirculation tank, air driven diaphragm chemical pumps, solenoids, control panel to control the operation and communicate with the AP or master control system, and the various valves, injection ports, piping, and wiring required. The supply pump, valving, injection ports, control panel, etc., are skid mounted, with interconnect piping included to connect to the free-standing warm water tank. The chemical pumps are mounted on a plate and shipped loose so that they can be located directly on a chemical drum or tote.

A. Equipment used for the CHN skid shall be as follows:
   1. Tank shall be vertical round style 2500 gallon, HDPE tank manufactured by Snyder or equal.
   2. Tank heater shall be Hubbell V1645T4XX circulation heater. Material shall be 304 L SS.
   3. Warm water transfer pump shall be Goulds model NPE 2ST1H5A4 1.25 x 1.5 – 6. Pump shall be centrifugal style and produce a maximum of 120 gpm.
      a. Motor shall be 3 HP, 3-phase TEFC, 2-pole 3500 rpm. Motor shall have continuous time rating at 40C and 1.4 service factor at 40C.
      b. Seal shall be John Crane Type 21 – Carbon/Silicon Carbide/EPR
   4. Solenoid Valves shall be 4-way, 24 volts as manufactured by MAC.
   5. Flow switch shall be Harwill paddle style with socket weld PVC.
   6. Chemical transfer pumps shall be Wilden diaghram, air operated. Pumps shall produce 0 – 3 gpm or 15 gpm and 100 ft. of head with an air consumption of 5 SCFM max.
   7. Actuated valves shall be Tyco/Keystone AR2 or 222 L/T Lug-Style Butterfly with cast iron body, 316 SS disc and stem, and EPDM Food Grade Seat. Actuator shall be Morin MRP or 79U Spring Return Pneumatic.
   8. Manual Valves
      a. Ball valves shall be Spears 3629-020 socket weld with PVC body and EPDM gaskets.
      b. Gate valve shall be Spears 2022-007 socket weld with PVC body and EPDM O-ring.
   9. Check Valves
      a. Butterfly valves shall be Spears 542G-020 PVC (2 in.)
      b. Poppet valves shall be FLO 1790-C20 PVC (2 in.)
   10. Level Transmitter shall be Rosemount 2088G1S22A1M5 0-30 PSI with LCD display. Wetted parts shall be 316L SST.
   11. Temperature transmitter shall be Rosemount RTD with 316 SS thermowell.

3.2.4 CIP Transfer/Injection

Pall has also included the automatic transfer of the CIP (Clean-In-Place) chemicals into the Recirculation/Feed Tank, eliminating the need for manual addition by the operator. The CIP transfer includes two additional chemical pumps (mounted on plates) that may be mounted directly on chemical drums or totes, along with the associated solenoid valves, injectors/check valves, foot valves, and programming.

A. Chemical Transfer pumps shall be Diaphragm style and air operated.
   1. Pumps shall produce 0-3 or 0-15 gpm flow and 100 ft. head consuming a maximum 5 SCFM air.
   2. Foot valve shall be a Spears ball check valve
   3. Injection valve shall be LMI Chem Injector/check valve.
   4. Approved manufacture shall be Wilden.

3.2.5 Control & Monitoring Equipment

The control system shall be capable of operating the system automatically with a minimum of operator intervention. In automatic mode, the system shall monitor the instrument readings and adjust the system's operation based on those readings in accordance with the preprogrammed logic. The control system shall alarm operators of abnormal conditions, and provide an interface so that an operator can manually operate the system.

Programmable Logic Controllers – For multiple skid control, the Contrologix™ PLC processor is used in the AP or master control panel with Flex™ I/O blocks in each additional panel.

Pall's standard controls package is designed to offer flexibility, and robustness. The system is designed around hardware and software from the same manufacturer to reduce compatibility issues and eliminate confusion with technical support issues. Pall has invested heavily in developing this architecture and standard software for the PLC and HMI. All of Pall's Controls Engineers and Field Service personnel are familiar with this design allowing the best possible customer support, fastest commissioning and startup time and less down-time.

Control Enclosure

A. The MF system shall have a main control panel mounted on the support skid. The control panel shall be NEMA 4 rating and be designed and constructed per the National Electrical Code (NFPA 70) and NFPA 79. The main control enclosure shall be constructed of carbon steel and shall be commercial-grit blasted to SSPC-SP10, primed with one coat of aromatic urethane zinc-rich primer (2.5-3.5 mils DFT) followed by 4 - 5 mil DFT finish coat of Tnemec Endurashield, series 73 (11sf safety blue), applied in two passes with partial drying between passes (equals one high-build coat). Total coating system (primer plush finish) is 7.0 mil DFT minimum.

B. Approved supplier shall be Hoffman.

Operator Interface Terminal

A. The main control enclosure shall incorporate a graphical operator interface with a diagonal display length of 7 inches. The operator interface shall be programmed to display the system in line drawing form to allow clear visual confirmation of the system status. This interface shall allow the system to be started and stopped in automatic mode, display process variables and alarms, allow the user to adjust system set points, silence/acknowledge alarms, manually initiate automated processes (i.e. filtration, regeneration, integrity test, etc.), prompt the user in a step by step fashion during manual procedures (i.e. CIP procedures), and allow true manual operation of the system by allowing the user to position individual valves and control pumps.

B. In addition to the graphical OIT, the enclosure door shall contain the following devices, each containing a UL mark:

- Pilot light to indicate a general alarm condition
- Pilot light to indicate that instrumentation voltage is present
- Lighted QUICK stop pushbutton (lit when the Q-stop is engaged)
- Fused disconnect door latch

C. OIT shall be Allen Bradley PanelView Plus™ 700 - 7" Diagonal.. Software shall be RSView HMI programming software.

Programmable Logic Controller

Multiple AP Skid Option:

For multiple skid systems, the control scheme is based on a single master PLC in a wall-mounted panel with distributed I/O. The master PLC controls all filtration skid processes and devices. If a CHN skid is bought as an option, the master PLC will control its processes and devices. The master PLC will be an Allen-Bradley® ControlLogix™ 5000 programmable logic controller. Each filtration skid will contain a control enclosure with Flex™ I/O. Communications between the master PLC and HMI is handled via Ethernet. Communications between the master PLC and the filtration skids is handled via DeviceNet™ The standard master control enclosure must be mounted in close proximity to, and in full view of the filtration skids and contain a PanelView™ HMI.

There will be wired into the PLC's I/O to allow the system to accept signals from customer's upstream or downstream equipment so that the system can be automatically stopped, started, or production rate changed based on the availability of feed water or filtrate storage space.

Wiring to/from master PLC input/output modules shall run through a properly sized fuse to protect the instrument or master PLC module.

CHN Skid:

The CHN (chemical, hot water, neutralization) system is designed to deliver hot and cold water, and various chemicals to a filtration skid for the Enhanced Flux Maintenance (EFM) and Clean-In-Place (CIP) processes. It can also be used to provide solutions to neutralize discarded acid and caustic solutions that were used during a Clean-In-Place process.
CHN Hardware - The CHN includes a local panel with local I/O that is connected to the filtration skid via DeviceNet™.

Local I/O: The CHN uses Allen-Bradley® Flex™ I/O series I/O products.

CHN Networking – the CHN is connected to the filtration skids via DeviceNet™.

PALL Water Processing

SECTION FOUR

Pricing Summary

Item	Description	Qty	Unit Price
1	**Pall Aria™ AP- 6 Microfiltration System** 1 self-cleaning strainer 1 feed/CIP tank & pump with VFD 1 recycle/RF tank & pump with VFD Automatic & manual valves, flow, pressure and temperature	1	Included

	controls, PLC & short-term data acquisition in control panel Integrated CIP capability and automatic integrity test. 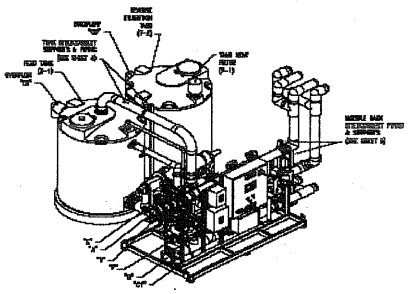 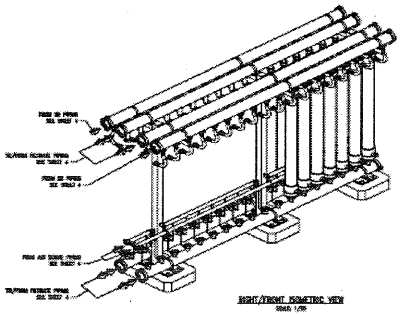 Off-skid rack with **30** Microfiltration Membrane Modules		
2	**Compressed Air System** Air Compressor with air dryer, common receiving tank. 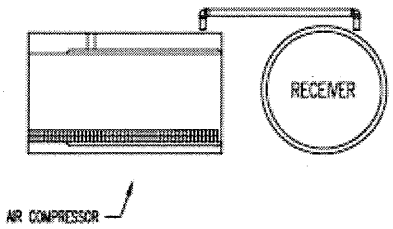	1	Included
3	**Chemical, Hot Water and Neutralization (CHN) System** Tank, heater & transfer pump, Control panel. Skid mounted tanks and chemical transfer pumps.	1	Included

	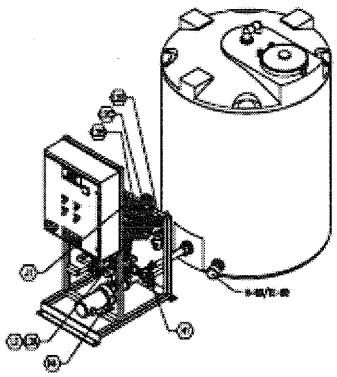		
4	**Turbidimeter Equipment** Hach 1720E or FilterTrak 660.	2	Included
5	**UPS** (Un-interrupted power supply for soft shut down during power outage)		Optional
6	**Desktop PC**	1	Included
7	**On-Site field service** (Start-up, Testing and On-Site Training [days])	5	Included
	Total Budgetary Price (1) AP-6 @ 500 gpm	USD	**$475,000**
	Total Budgetary Price for (2) AP-6s @ 250 gpm.	USD	**$900,000**

The Aria microfiltration system has been designed based on the following design parameters:

- (1+0) system configuration
- Total system net filtrate capacity = 500 usgpm (720,000 GPD)
- Each AP-6 unit is designed to deliver 500 usgpm of net filtrate
- Instantaneous Design Flux = 50 GFD
- Excess Recirculation = 10%
- SASRF interval = 20 minutes
- EFM = Daily
- CIP = Monthly

Validity

This Proposal is for discussion purposes only, does not constitute a binding agreement on either party, and remains subject to corporate approval by both parties. The information contained herein is deemed confidential and is not to be shared with any third party.

Taxes
Taxes are NOT included in the pricing. Any taxes, duties, tariffs of any type are for the account of the Purchaser.

Freight
Freight is not included in above price. Title passes at point of manufacturing (Cortland, NY).

Terms of Payment
Pall Corporation Standard Terms and Conditions apply – see attached.
The Terms of Payment are based on the payment schedule provided below:

- 20% upon receipt of Purchase Order
- 30% upon Shop Drawing Submittal.
- 40% upon delivery of equipment or notification that equipment is ready to ship (Partial shipments permitted)
- 10% upon start-up.

Equipment Shipment and Delivery

• Shop Drawing Submittal Package:	4 weeks after Agreement Execution
• Equipment Shipment:	12-16 weeks after Shop Drawing Approval
• Operator Training:	Hands-on training provided during start-up

Standard Terms and Conditions of Sale

1. **Acceptance:** The Seller agrees to sell and the Buyer agrees to buy the totality of Seller's deliverable items and associated infrastructure and applications and all specified interfaces, if any (collectively, "System") and such purchase and sale and Seller's acceptance of Buyer's purchase order for Systems and any part thereof is subject to and limited to Seller's express terms and conditions of sale contained herein (including the Schedule of Commercial Terms, if one is attached hereto (the "Schedule")) and in any quotation, proposal, order acknowledgment form or similar document delivered by Seller to Buyer (the "Seller Acknowledgement Form") and any terms incorporated herein or therein by reference (collectively, "Seller's Terms and Conditions of Sale"). Any additional or different terms or any attempt by Buyer to vary in any degree any of Seller's Terms and Conditions of Sale are hereby objected to and shall be deemed material and not binding on Seller.

2. **Buyer and Seller Responsibilities**: The Buyer shall be responsible for correctly specifying and advising the Seller of its requirements for the System, including, where applicable, design specifications, and is responsible

for any discrepancies, errors or omissions in drawings, documentation or other information supplied in writing by it, if any, or between such documents and any of the other documents forming part of this order. The Buyer agrees that the design specifications and requirements described in the Scope of Works in Item 4 of the Schedule (if one is attached) or otherwise in Buyer's documents delivered to Seller correctly represent the Buyer's requirements for the System as advised to the Seller, and acknowledges that the Seller's supply of the System will be based on such design specification and requirements.

It is the Buyer's sole responsibility to ensure that its premises are safe and suitable for the installation and operation of the System or performance of any associated services. When requested and appropriate, and at the Buyer's cost, the Seller shall, prior to delivery of any part of the System inspect the relevant premises to confirm that the premises are suitable for the installation and operation of any part of the System and, if Seller performs such inspection and determines that any aspect of any inspected premises is not suitable for the installation and operation of that part of the System, the Seller shall provide the Buyer with such information in writing and such assistance as may be necessary to enable the Buyer at its own cost to prepare the premises so that they are suitable for the installation and operation of the System.

The Buyer shall allow the authorized personnel of the Seller access to its premises during normal working hours for the purpose of performing its obligations under this order.

The Seller shall take reasonable care to ensure that, in the delivery and, if applicable, installation of the System, that the Seller does not interfere with the operations of the Buyer or its employees or any other contractor working on the premises.

If Seller is performing installation, oversight or commissioning services and, in the reasonable opinion of the Seller, it is necessary to remove or disconnect any existing equipment of the Buyer in order to install or commission the System, the Seller shall give the Buyer reasonable prior notice of such requirements and the Buyer shall provide the Seller, at Buyer's cost, with such assistance as is reasonably necessary to facilitate such removal or disconnection.

Standard terms of sale include two sets of operating instructions in Seller's standard electronic format. If additional sets or alternative formats are required, they are available at an additional charge. Upon receipt of request for additional sets, a price quotation will be forwarded.

© Pall Corporation 2008 G:\Corporate Legal\FORMS\FORMS\STANDARD T&Cs\Pall Standard Terms and Conditions of Sale - Systems (WH.2008).doc

3. **Delivery & Title:** Seller reserves the right to make partial deliveries and to ship Systems (or parts thereof) as they become available, in advance of the quoted delivery date. If the System is to be delivered in installments, then insofar as parts of the System are subject to the same purchase order, the order will be treated as a single contract and not severable. The delivery and/or shipping schedule is the best estimate possible based on conditions existing at the time of Seller's acceptance of the order or Seller's quotation and receipt of all specifications, as applicable, and in the case of non-standard items, any such date is subject to Seller's receipt of complete information necessary for design and manufacture. Seller assumes no liability whatsoever, including loss of use or for any other direct, indirect, or consequential damages due to delays.
Unless otherwise mutually agreed to in writing signed by both Seller and Buyer:

Delivery from Seller's factory, or sub-contracted fabricator, or designated shipment point (collectively, "Seller's Shipment Point") to Buyer's specified destination shall be FCA (Free Carrier) Incoterms 2000 Seller's Shipment Point. Title and risk of loss pass at the point when the System or parts thereof are loaded on the conveyance (i.e., Common Carrier, Licensed Trucker or Rail Car) at the Seller Shipment Point (provided that Seller shall retain a security interest over such Systems or part thereof (and shall be entitled to require Buyer to deliver the Systems and/or part thereof to Seller or its designee and, if Buyer fails to do so, to enter the premises of Buyer or any third party where the Systems and/or part thereof are stored and repossess the Systems and/or part thereof) until payment in respect of the Systems or part thereof, as the case may be, is received by Seller, its sub-contracted fabricator or designated shipment point) and Buyer has the obligation to insure once title passes.

ii. Unless otherwise directed by Buyer, Seller will, at Buyer's risk and expense, arrange for the delivery of the System or parts thereof to Buyer's site/facility. Buyer will pay, or reimburse Seller for all freight charges, taxes, duties, entry fees, brokers fees, special, miscellaneous and all other ancillary charges and special packaging charges.

4. **Prices:** The price for the System and/or parts and/or installation, oversight or commissioning services thereof shall be Seller's quoted price. Except as may be specifically provided in Seller's quotation or proposal or the Schedule (if one is attached), all prices are subject to change without notice. Pall may also at any time assess a fuel or energy surcharge (in addition to the price of each Product).

5. **Taxes:** All prices are exclusive of any applicable federal, state or local sales, use, excise or other similar taxes, including, without limitation, value added tax, goods and services tax or other similar tax. All such taxes will be for Buyer's account and will be paid by Buyer to Seller upon submission of Seller's invoices. Buyer agrees to make tax accruals and payments to the tax authorities as appropriate. If Buyer is exempt from any applicable sales tax or equivalent but fails to notify Seller of such exemption or fails to furnish its Sales Tax Exemption Number to Seller in a timely manner and the Seller is required to pay such tax, the amount of any such payment made by Seller will be reimbursed by Buyer to Seller upon submission of Seller's invoices.

6. **Payment:**

Payment shall be made by Buyer in U.S. Dollars net thirty (30) days after invoice date, unless Purchase Order provides for installment payments. Installment payments will be made per the following schedule20% upon earlier of (i) Seller being awarded project or (ii) delivery to Seller of the purchase order or (iii) Seller acknowledgment of the purchase order 30% of contract value upon first submittal of drawings by Seller for approval. 40% of contract value upon earlier of (i) date of shipment by Seller of the System (or components thereof if the order is for parts only) or (ii) date of Seller's notice that the System (or components thereof if the order is for parts only) is ready for shipment by Seller. 10% of contract value upon the earlier of (i) first usable effluent being produced by the System, or (ii) 30 days from shipment of the System.

ii. A monthly interest charge at the rate of one and one half percent or the maximum legal rate allowed by applicable law, whichever is lower, will be assessed on all past due payments calculated from the date of shipment.
iii. Seller may, at any time or times, suspend performance of any order or require payment in cash, security or other adequate assurance satisfactory to Seller when, in Seller's opinion, the financial condition of Buyer or other grounds for insecurity warrant such action.
iv. All sales are subject to the approval of Seller's credit department.
v. Buyer may not setoff or try to setoff any amounts that may be claimed by Buyer against any amounts that are owed to Seller.

7. **Warranty, Limitation of Liability and Remedies:**
i. THERE IS NO WARRANTY OF MERCHANTABILITY OR FITNESS FOR ANY PARTICULAR PURPOSE WITH RESPECT TO ANY OF THE SYSTEMS (OR PARTS THEREOF), NOR IS THERE ANY OTHER WARRANTY EXPRESS OR IMPLIED, EXCEPT AS PROVIDED FOR HEREIN.
ii. For a period of twelve months from the date of delivery by Seller (the "Warranty Period"), Seller warrants that Systems manufactured by Seller when properly installed and maintained, and operated at ratings, specifications and design condition, will comply with Seller's specifications for such System set forth in the Schedule (if one is attached), or provided by Seller to Buyer, or, in the absence of such specifications, such specifications as have been provided by Buyer to Seller and accepted in writing by Seller and included in the Seller Acknowledgment Form, at the time of the order.
iii. Seller's liability under any warranty is limited solely (in Seller's discretion) to replacing, repairing or issuing credit for Systems (or parts thereof), which fail to meet the above warranty during the Warranty Period, up to the price received by Seller for such Systems (or parts thereof). Buyer shall notify Seller promptly in writing of any claims and provide Seller with an opportunity to inspect and test the System (or part thereof) claimed not to meet the above warranty. Buyer shall provide Seller with a copy of the original invoice for the System, and prepay all freight charges to return any System (or party thereof) to Seller's factory, or other facility designed by Seller. All claims must be accompanied by full particulars, including System operating conditions, if applicable.
iv. If Seller shall perform any installation, oversight or commissioning services, such services shall be performed in a workmanlike manner, in accordance with applicable law and industry standards by qualified personnel; this warranty shall survive for thirty (30) days from the date the installation is completed. In the event of a warranty claim under this paragraph, Buyer shall inform Seller in writing of the details of the claim within thirty (30)
© Pall Corporation 2008 3

days of the completion of installation, oversight or commissioning services by Seller and Buyer's sole option and relief shall be for Seller, at Seller's discretion, to repeat the service at its own expense or refund the installation fee paid by Buyer, if any. If Seller determines that any warranty claim is not, in fact, covered by the foregoing service warranty contained in this paragraph, Buyer shall pay Seller its then customary charges for all services performed by Seller.
v. In no event shall Seller be liable for any System (or parts thereof) altered or installed by someone other than Seller or for a System (or parts thereof) subjected to misuse, abuse, improper installation (other than by Seller), application, operation, maintenance or repair, alteration, accident, or negligence in use, storage, transportation or handling.
vi. In no event will Seller be liable for any damages, incidental, special, consequential, indirect, punitive or otherwise, including loss of profit, remanufacturing cost, rework cost, de-installation or re-installation cost, whatever the claim (tort, breach of contract or warranty or otherwise) and whatever the forum, whether arising out of or in connection with the manufacture, packaging, delivery, storage, use, installation, misuse or non-use of any of its Systems or parts thereof or their use or resale by Buyer or any other cause whatsoever. Without limiting the generality of the foregoing, in no event will Seller be liable for any costs, damages or expenses in excess of the price paid to Seller with respect to the System (or parts thereof) sold to Buyer under this Order.
vii. In no event shall Buyer be entitled to claim under this or other warranty if Buyer is in breach of its obligations, including payment, hereunder.

8. **Cancellation:** Buyer may not cancel its order after Seller's acceptance unless all the details are approved in writing by the parties, including Buyer's agreement to pay a stated amount of termination charges.

9. **System Returns:** Systems or parts thereof may not be returned for any reason without prior written authorization and shipping instructions from Seller. Systems (or parts thereof) shipped without Seller's authorization shall be returned at Buyer's expense. Credit for any returned Systems or parts thereof is at the discretion of Seller after receipt and inspection of the Systems or parts thereof.

10. **Claims:** Unless and then only to the extent that an acceptance test regime is provided for in the Scope of Works included in the Schedule (if one is attached), all claims for incorrect Systems or parts thereof must be made in writing within ten days after receipt of applicable part.

11. **Variations:** Seller shall not implement any variations in the scope of work described in Seller's documentation unless Buyer and Seller agree in writing to the details of the variation and any resulting price, schedule or other contractual modifications. This includes any variations necessitated by a change in applicable law occurring after the effective date of any purchase order including these Terms and Conditions of Sale.

12. **Patent or Trademark Infringement:** Buyer shall indemnify and defend, at its own expense, Seller against claims or liability for U.S. or applicable foreign patent or trademark or other intellectual property infringement and for product liability arising from the preparation or manufacture of a System or part thereof according to Buyer's specifications or instructions, or from Buyer's unauthorized use of Seller's System or part thereof or from any changes or alterations to Seller's System or part thereof made by persons other than Seller.

13. **Ownership of Materials:** All devices, designs (including drawings, plans and specifications), estimates, prices, notes, electronic data and other documents or information prepared or
© Pall Corporation 2008 4

disclosed by Seller, and all related intellectual property rights, shall at all times remain Seller's property. Seller grants Buyer a non-exclusive, non-transferable license to use any such material to the extent necessary and solely for Buyer's use of the System purchased by Buyer from Seller hereunder. Buyer shall not disclose any such material to third parties without Seller's prior written consent. As a condition to Seller's delivery to Buyer of the System and/or parts thereof, Buyer shall not, directly or indirectly, and shall cause its employees, agents and representatives not to: (i) alter or modify the System and/or parts thereof, (ii) disassemble, decompile or otherwise reverse engineer or analyze the System and/or parts thereof, (iii) remove any product identification or proprietary rights notices, (iv) modify or create derivative works, (v) otherwise take any action contrary to Seller's rights in the technology and intellectual property relating to the System and/or parts thereof, (vi) assist or ask others to do any of the foregoing.

14. **Export:** As a condition to Seller's delivery to Buyer of the System and/or parts thereof, Buyer agrees, with respect to the exportation or resale of the System, and/or parts thereof by Buyer, to comply with all requirements of the International Traffic in Arms Regulations ("ITAR") and the Export Administration Regulations ("EAR"), regulations issued thereunder and any subsequent amendments thereto, and all other National, including, but not limited to, European, government laws and regulations on export controls, including laws and regulations pertaining to export licenses, restrictions on export to embargoed countries and restrictions on sales to certain persons and/or entities.

15. **Entire Agreement:** Seller's Terms and Conditions of Sale and the Confidentiality Agreement, if any, are the entire agreement of the parties and they may not be modified except in writing signed by a duly authorized representative or officer of Seller.

16. **Quotation:** All quotations by Seller are subject to change or withdrawal without prior notice to Buyer, unless otherwise specifically stated in Seller's quotation or proposal. Quotations are made subject to approval by Seller of Buyer's credit. All sales, contracts and orders become effective only if and when approved and accepted in writing by Seller by the issuance of its Seller Acknowledgment Form.

17. **Confidentiality:** If Seller discloses or grants Buyer access to any research, development, technical, economic, or other business information of "know-how" of a confidential nature, whether reduced to writing or not, Buyer will not use or disclose any such information to any other person or company at any time, without Seller's prior written consent. In the event that Buyer and Seller have entered into a separate confidentiality agreement (the "Confidentiality Agreement"), the terms and conditions of such agreement shall take precedence over the terms of this paragraph.

18. **No Waiver:** Seller's failure to insist on Buyer's strict performance of the terms and conditions contained herein at any time shall not be construed as a waiver by Seller of performance in the future.

19. **Force Majeure:** Whenever performance by Seller of any of its obligations hereunder, is substantially prevented by reason of any act of God, strike, lock-out, or other industrial or transportation disturbance, fire lack of materials, law, regulation or ordinance, war or war conditions, or by reason of any other matter beyond its reasonable control, then such performance shall be excused, and deemed suspended during the continuation of such event and for a reasonable time thereafter, delayed, or adjusted accordingly.

20. **Validity:** If any provision of these Seller's Terms and Conditions of Sale is held by any competent authority to be invalid or unenforceable in whole or in any part, such provision shall be ineffective, but only to the extent of such invalidity or unenforceability, without invalidating the remainder of such provision nor the other provisions, which shall not be affected.

© Pall Corporation 2008 5

21. **Governing Law:** These Seller's Terms and Conditions and the parties' agreement for sale of Systems and/or parts thereof and/or services relating thereto shall be governed by the laws of the State of New York, without regard to conflict of laws principles therein and the parties agree to submit to (and waive any objection on the grounds of inconvenient forum or otherwise) the jurisdiction of the Supreme Court of the State of New York, County of Nassau or the United States District Court for the Southern District of New York, which courts shall have exclusive jurisdiction to adjudicate and determine any suit, action or proceeding regarding or relating to these Terms and Conditions and the purchase and supply of the Systems and/or parts thereof or services relating thereto. A judgment, order or decision of those courts in respect of any such claim or dispute may be recognized and enforced by any courts of any state, country or other jurisdiction.

22. **Survival:** All payment, confidentiality and indemnity obligations, warranties, limitations of liability, product return, and ownership of materials provisions together with those Sections the survival of which is necessary for the interpretation or enforcement of these terms and conditions, shall continue in full force and effect for the duration stated in such provisions or the applicable statute of limitations.
PALL WH 1007
© Pall Corporation 2008 6

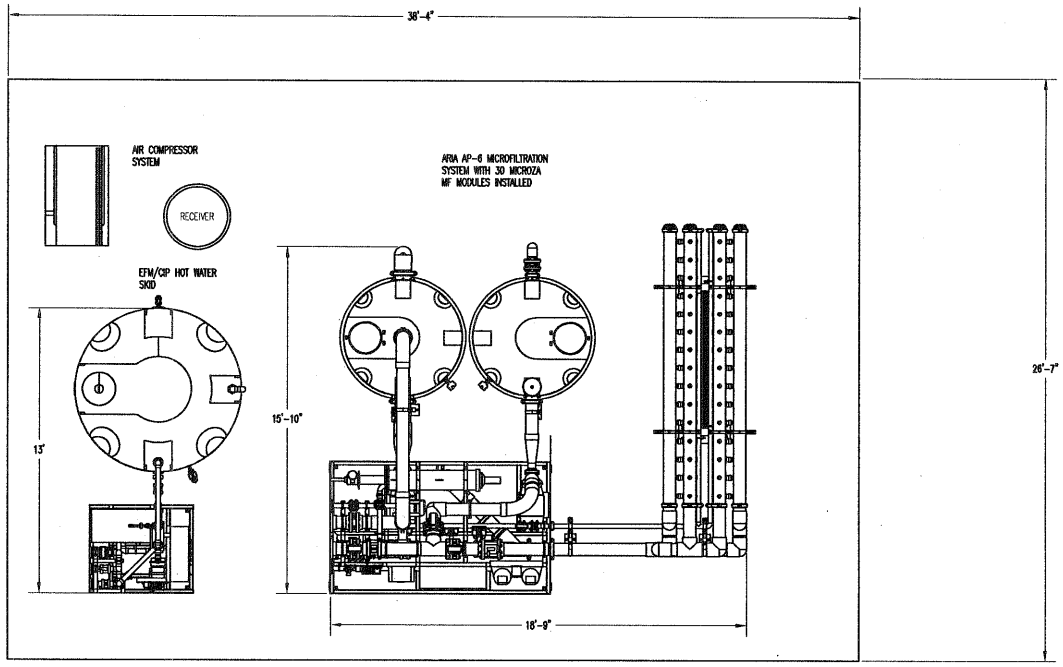

CODE IDENT. NO. 17238	NAME	DATE
DRAWN BY	R. FUREY	09/22/06
PROJECT ENGINEER		
CHECKER		
MANUFACTURING		
ENGINEERING MANAGER		
QUALITY CONTROL		
RELEASED BY		

COMPANY CONFIDENTIAL
This information is the property of PALL CORPORATION; and is furnished for use of the assigned recipient only. No copies are to be made and the material contained herein is not to be divulged to others, either within or outside PALL CORPORATION, without specific approval of an officer of PALL CORPORATION.

--> DO NOT SCALE DRAWING <--

SALES ATTACHMENT SPECIFIES THE FOLLOWING INFORMATION PERTAINS ONLY TO THIS SHEET

DIMENSIONS ARE IN: INCH ONLY

SPECIFICATIONS:

TOLERANCE: .XX ±, .XXX ±, FRACTION ±, ANGLE ±

SURFACE FINISH: µIN. / µM.

DRAWING NAME

AP-6 30 MOD W/ EFM

PRELIMINARY LAYOUT

DISTRIBUTION

Pall Corporation
PALL TRINITY MICRO
CORTLAND, NEW YORK

PART NUMBER

DWG. SIZE: D

DRAWING NUMBER

SCALE: 1:32

REVISION: *

THIRD ANGLE PROJECTION

CAD FILE NUM: -------

CAD FILE NUM: NONE

SHEET 1 OF SHEET 1

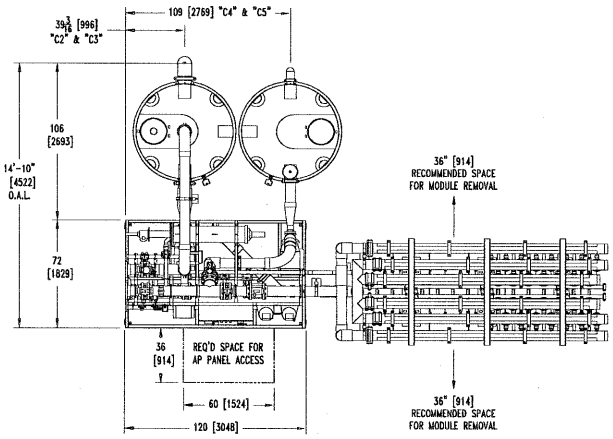

TOP VIEW

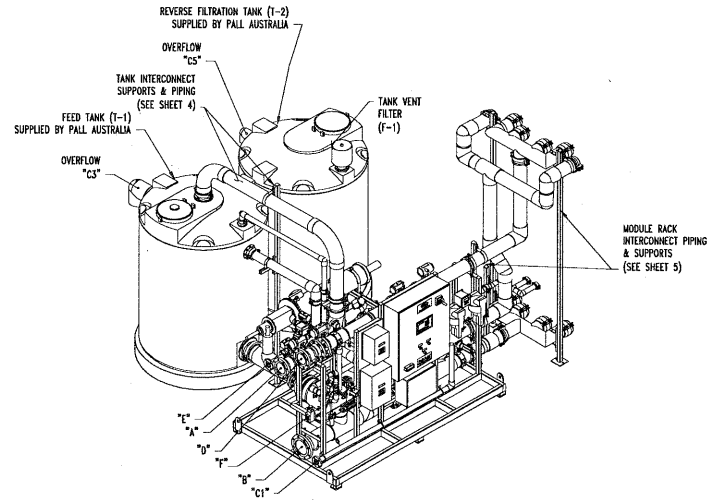

LEFT/FRONT ISOMETRIC VIEW
(REMOTE MODULE RACK REMOVED FOR CLARITY)

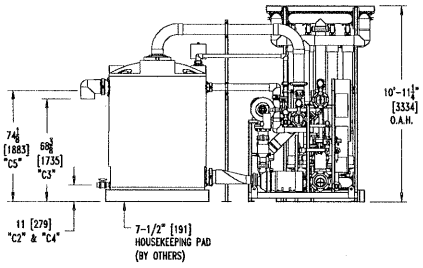

LEFT SIDE VIEW

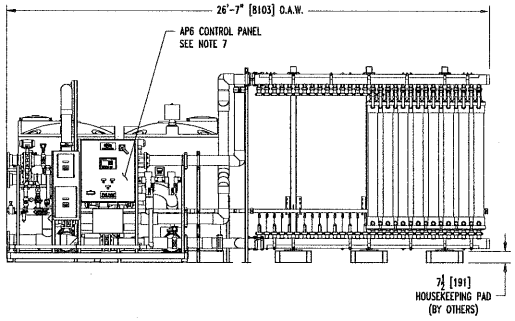

FRONT VIEW

ITEM	DESCRIPTION	TYPE	
F	COMPRESSED AIR SUPPLY	1-1/2" [40] FNPT	NOTE 9
E	CIP MAKE UP WATER	2" [50] FLG	NOTE 8 & 9
D	FILTRATE FORWARD	6" [150] FLG	NOTE 8 & 9
C5	REVERSE FILTRATION TANK T-2 OVERFLOW	4" [100] SW	NOTE 9
C4	REVERSE FILTRATION TANK T-2 DRAIN	2" [50] SW	NOTE 9
C3	FEED TANK T-1 OVERFLOW	8" [200] SW	NOTE 9
C2	FEED TANK T-1 DRAIN	2" [50] SW	NOTE 9
C1	MISC. DRAIN	2" [50] FLG	NOTE 8 & 9
B	CIP/RF/AS DRAIN	8" [200] FLG	NOTE 8 & 9
A	FEED	6" [150] FLG	NOTE 8 & 9

BATTERY LIMIT CONNECTIONS

NOTES:

1.) DO NOT STORE THE MODULES OR THEIR SHIPPING CONTAINERS OUTSIDE OR IN AN AREA WHERE THERE WILL BE EXPOSURE TO DIRECT SUNLIGHT, EXCESSIVE HEAT, OR COLD. PALL CORPORATION REQUIRES MEMBRANES BE STORED IN A CONTROLLED, SECURE ENVIRONMENT TO GUARANTEE MODULES ARE NOT DAMAGED DURING STORAGE.
2.) DO NOT DROP OR EXPOSE THE MODULES OR THEIR SHIPPING CONTAINERS TO SHOCK OR IMPACT. THERE MAY BE DAMAGE TO THE MEMBRANE EVEN IF NO VISIBLE DAMAGE TO THE MODULE CASE IS EVIDENT.
3.) THE MODULE RACK ASSEMBLY, INTERCONNECT PIPING ASSEMBLY, AND TANKS WILL BE SHIPPED SEPARATELY FOR INSTALLATION IN THE FIELD.
4.) THIS DRAWING SHOWS (1) COMPLETE AP6 ASSEMBLY.
5.) THE DISKS ON ELASTOMER-SEATED BUTTERFLY VALVES MUST BE AT LEAST PARTIALLY OPEN WHEN TIGHTENING FLANGE BOLTS. FAILURE TO DO SO WILL CAUSE PREMATURE FAILURE, AND WILL VOID ALL WARRANTIES ON THE VALVE.
6.) REFER TO INSTALLATION INSTRUCTIONS FOR PIPING ASSEMBLY.
7.) THE CONTROL ENCLOSURE IS CONSTRUCTED OF CARBON STEEL, PAINTED BLUE AND RATED NEMA 4. THE USE OF ALL CONDUIT PENETRATION HUBS OF THE SAME ENVIRONMENTAL RATING AS THE ENCLOSURE IS REQUIRED.
DO NOT PENETRATE THE TOP OF THE ENCLOSURE.
8.) ALL FLANGES ARE BOLT CIRCLE/HOLE SIZE EQUIVALENT TO ANSI 150# RATED FLANGES.
9.) PIPING, CONNECTING TO PALL EQUIPMENT, MUST BE ADEQUATELY SUPPORTED TO PREVENT ANY NOZZLE LOADS ON THE EQUIPMENT.
DO NOT USE SKID CONNECTIONS TO SUPPORT PIPING.

DIMENSIONS PROVIDED WITHIN THIS DRAWING ARE FOR REFERENCE ONLY. BECAUSE OF FITTING SIZE VARIATIONS, PRIOR TO MAKING FINAL WELDS, PIPING SHALL BE DRY FIT UP TO FRAME TO ENSURE PROPER ALIGNMENT OF PIPING, FLANGES, BOLT HOLES, ETC.

AP6 SYSTEM WEIGHT				
	WEIGHT			
EQUIPMENT	DRY Lbs.	DRY Kgs.	WET Lbs.	WET Kgs.
SKID	3,600	1,633	4,100	1,860
INTERCONNECT	1,000	453	2,100	953
MODULE RACK	7,200	3,266	9,000	4,082
TANKS	800	363	19,000	8,618
TOTAL WEIGHT	12,600	5,715	34,200	15,513

TABLE OF CONTENTS

SHEET #	DESCRIPTION
1	TOP SYSTEM ASSEMBLY
2	AP6 SKID LAYOUT
3	FOOTPRINT LAYOUT
4	TANK TO AP SKID INTERCONNECTING PIPING DETAIL
5	AP SKID TO MODULE RACK INTERCONNECTING PIPING DETAIL

PALL ARIA™ AP-6 SYSTEM

IMPORTANT: BEFORE ATTEMPTING TO OPERATE OR INSTALL THIS SYSTEM, IT IS ESSENTIAL TO READ AND UNDERSTAND THIS PRODUCT'S OPERATION AND MAINTENANCE MANUAL (SHIPPED UNDER SEPARATE COVER). FAILURE TO READ THE OPERATION AND MAINTENANCE MANUAL BEFORE ATTEMPTING TO OPERATE ANY PALL CORPORATION EQUIPMENT MAY RESULT IN SERIOUS PERSONAL INJURY AND/OR PRODUCT DAMAGE, AND MAY VOID ANY AND/OR ALL WARRANTIES.

CODE IDENT. NO. 17238	NAME	DATE	--> DO NOT SCALE DRAWING <--
DRAWN BY	S. SMITH	08AUG2007	UNLESS OTHERWISE SPECIFIED, THE FOLLOWING INFORMATION PERTAINS ONLY TO THIS SHEET
PROJECT ENGINEER	M. POOLE	21AUG2007	
ENGINEER	-----	-----	DIMENSIONS ARE IN INCHES [mm] — TOLERANCE: X ± / XXX ±
ENGINEER	-----	-----	
ENGINEER	-----	-----	SURFACE FINISH √ (µm) — ___ / ___ — X ± / XX ± — FRACTION ± 1/8 / ANGLE ± 2°
CHECKER	J. HOSKINS	21AUG2007	

Copyright 2007 PALL CORPORATION
This document may contain confidential technical data, including trade secrets proprietary to Pall Corporation. The drawing, design rights and all other disclosures in this document are the property of Pall Corporation. Unauthorized use, copying, distribution to third parties, manufacture, or reproduction in whole or in part is prohibited.

Pall Corporation
Pall Advanced Separations Systems
Cortland, New York

DRAWING NUMBER: 10000014584 — REVISION: 00 — DWG SIZE: D

DRAWING NAME: ASSY,FILTSKID,AP6,2008,R1,0DEG,QUAD,C

THIRD ANGLE PROJECTION — SCALE: 1/40 — MATERIAL NUMBER — SHEET 1 OF 5

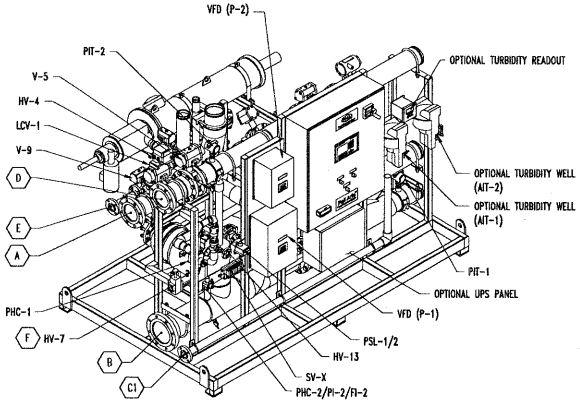

LEFT/FRONT ISOMETRIC VIEW

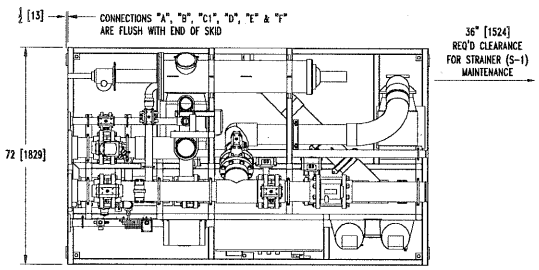

TOP VIEW
(AP6 SKID ONLY)

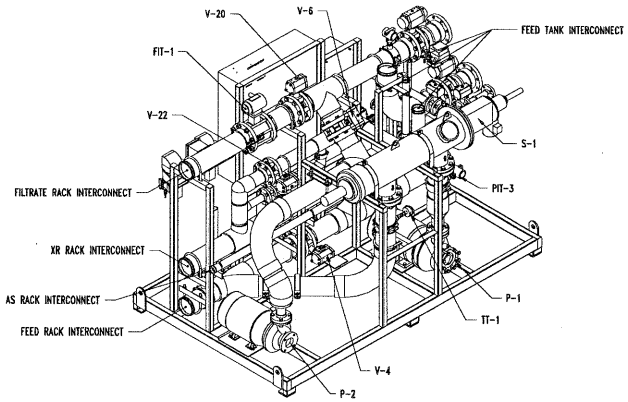

RIGHT/REAR ISOMETRIC VIEW

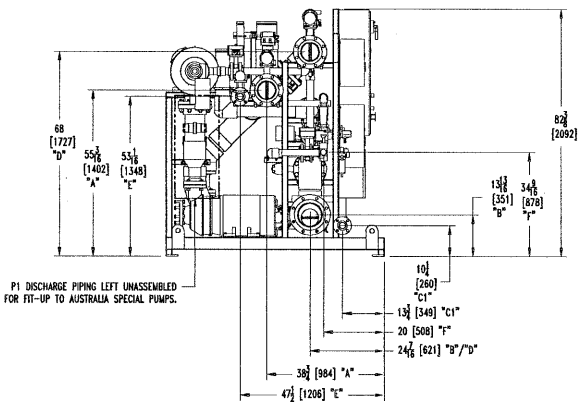

LEFT SIDE VIEW
(AP6 SKID ONLY)

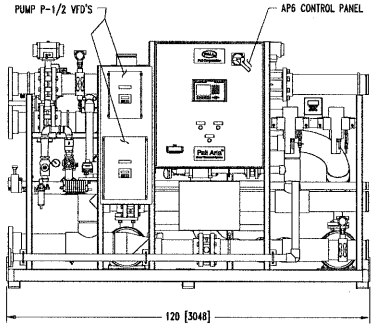

FRONT VIEW
(AP6 SKID ONLY)

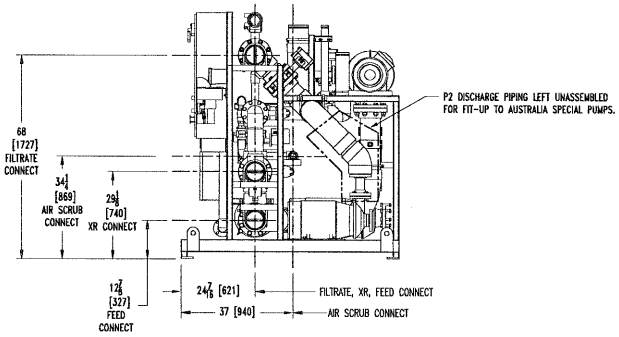

RIGHT SIDE VIEW
(AP SKID MODULE RACK INTERCONNECT)
SCALE: 1/16

PALL ARIA™ AP-6 SYSTEM

IMPORTANT: BEFORE ATTEMPTING TO OPERATE OR INSTALL THIS SYSTEM, IT IS ESSENTIAL TO READ AND UNDERSTAND THIS PRODUCT'S OPERATION AND MAINTENANCE MANUAL (SHIPPED UNDER SEPARATE COVER). FAILURE TO READ THE OPERATION AND MAINTENANCE MANUAL BEFORE ATTEMPTING TO OPERATE ANY PALL CORPORATION EQUIPMENT MAY RESULT IN SERIOUS PERSONAL INJURY AND/OR PRODUCT DAMAGE, AND MAY VOID ANY AND/OR ALL WARRANTIES.

CODE IDENT. NO. 17238	NAME	DATE
DRAWN BY	S. SMITH	08AUG2007
PROJECT ENGINEER	M. POOLE	21AUG2007
ENGINEER	----	----
ENGINEER	----	----
ENGINEER	----	----
CHECKER	J. HIGGINS	21AUG2007

--> DO NOT SCALE DRAWING <--

UNLESS OTHERWISE SPECIFIED, THE FOLLOWING INFORMATION PERTAINS ONLY TO THIS SHEET

DIMENSIONS ARE IN: INCHES [mm]

TOLERANCE: .X ± .XXX ± .XX ± ANGLE ± 2° FRACTION ± 1/8

SURFACE FINISH √ AIR ___ (µin) ___

Copyright 2007 PALL CORPORATION
This document may contain confidential technical data, including trade secrets proprietary to Pall Corporation. The drawing, design rights and all other disclosures in this document are the property of Pall Corporation. Unauthorized use, copying, distribution to third parties, manufacture, or reproduction in whole or in part is prohibited.

PALL® Pall Corporation
Pall Advanced Separations Systems
Cortland, New York

DRAWING NUMBER: 10000014584 | REVISION: 00 | DWG SIZE: D

DRAWING NAME: ASSY,FILTSKID,AP6,2008,R1,0DEG,QUAD,C

THIRD ANGLE PROJECTION | SCALE: 1/20 | MATERIAL NUMBER | SHEET 2 OF 5

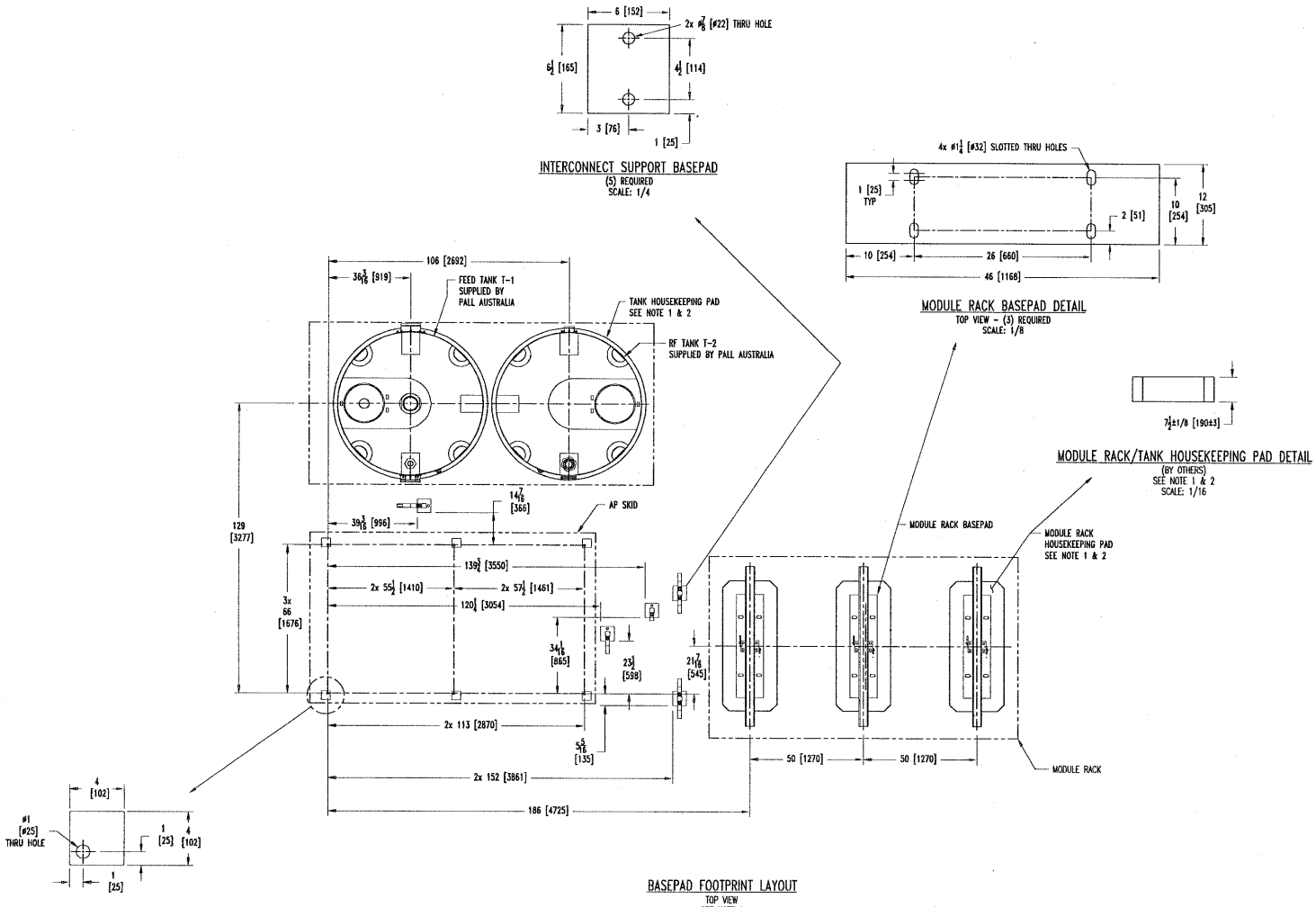

NOTES:

1.) THE TANKS T-1, T-2 AND THE MODULE RACK BASE PLATES ARE ELEVATED 7-1/2" HIGHER THAN THE AP6 BASE PLATES; THE EQUIPMENT MOUNTING PADS SHALL BE POURED TO ACCOMMODATE THIS DIFFERENCE. HOUSEKEEPING PAD TO BE SIZED, SUPPLIED AND INSTALLED BY OTHERS. HOUSEKEEPING PAD IS TO BE POURED LEVEL TO ACCOMMODATE MODULE RACK AND TANKS T-1 AND T-2.

2.) IT IS RECOMMENDED THAT THE MODULE RACK/TANK HOUSEKEEPING PADS EXTEND 8" ON ALL SIDES OF EQUIPMENT.

3.) ANCHOR BOLTS FOR SECURING MODULE RACK TO HOUSEKEEPING PAD TO BE SIZED, SUPPLIED AND INSTALLED BY OTHERS.

4.) AFTER LEVELING OF MODULE RACK, SHIM AND GROUT AS NECESSARY (BY OTHERS).

5.) THE MODULE RACK FRAME IS SHIPPED UNASSEMBLED.

6.) DO NOT ANCHOR MODULE RACK FRAME UNTIL ALL INTERCONNECT PIPING FROM AP6 SKID TO MODULE RACK IS INSTALLED.

PALL ARIA™ AP-6 SYSTEM

IMPORTANT: BEFORE ATTEMPTING TO OPERATE OR INSTALL THIS SYSTEM, IT IS ESSENTIAL TO READ AND UNDERSTAND THIS PRODUCT'S OPERATION AND MAINTENANCE MANUAL (SHIPPED UNDER SEPARATE COVER). FAILURE TO READ THE OPERATION AND MAINTENANCE MANUAL BEFORE ATTEMPTING TO OPERATE ANY PALL CORPORATION EQUIPMENT MAY RESULT IN SERIOUS PERSONAL INJURY AND/OR PRODUCT DAMAGE, AND MAY VOID ANY AND/OR ALL WARRANTIES.

CODE IDENT. NO. 17236	NAME	DATE	--> DO NOT SCALE DRAWING <--
DRAWN BY	S. SMITH	08AUG2007	UNLESS OTHERWISE SPECIFIED, THE FOLLOWING INFORMATION PERTAINS ONLY TO THIS SHEET
PROJECT ENGINEER	M. POOLE	21AUG2007	
ENGINEER	----	----	DIMENSIONS ARE IN INCHES [mm] — TOLERANCE: X. ± .XXX ±
ENGINEER	----	----	
ENGINEER	----	----	SURFACE FINISH √ µ.in [µm] — X ± FRACTION ± 1/8
CHECKER	J. HOSKINS	21AUG2007	XX ± ANGLE ± 2°

Copyright 2007 PALL CORPORATION
This document may contain confidential technical data, including trade secrets proprietary to Pall Corporation. The drawing, design rights and all other disclosures in this document are the property of Pall Corporation. Unauthorized use, copying, distribution to third parties, manufacture, or reproduction in whole or in part is prohibited.

PALL® Pall Corporation
Pall Advanced Separations Systems
Cortland, New York

DRAWING NUMBER: 10000014584 | REVISION: 00 | DWG SIZE: D

DRAWING NAME: ASSY,FILTSKID,AP6,2008,R1,0DEG,QUAD,C

THIRD ANGLE PROJECTION | SCALE: 1/16 | MATERIAL NUMBER | SHEET 3 OF 5

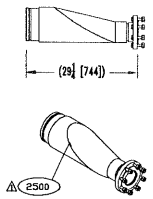

INTERCONNECT-TANK/P-1 (2500)
(FEED TANK TO ARIA AP6 FEED PUMP P-1)
(SEE NOTE 2 THIS SHEET)

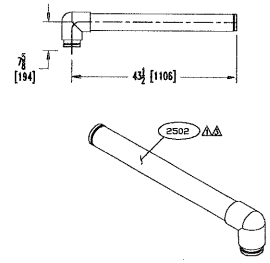

INTERCONNECT-TANK/AP SKID EXCESS RECIRC. (2502)
(FEED TANK TO AP6 EXCESS RECIRC. CONNECTION)

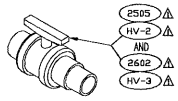

TANK T-1/T-2 DRAIN CONNECTION "C2" (2505) & "C4" (2602)
(RF TANK TO CUSTOMER DRAIN)
(SEE NOTE 3 THIS SHEET)

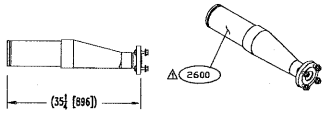

INTERCONNECT-TANK/P-2 (2600)
(FEED TANK TO ARIA AP6 FEED PUMP P-2)
(SEE NOTE 2 THIS SHEET)

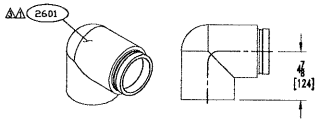

"TANK T-2 OVERFLOW CONNECTION "C5" (2601)
(RF TANK TO CUSTOMER DRAIN)
(SEE NOTE 3 THIS SHEET)

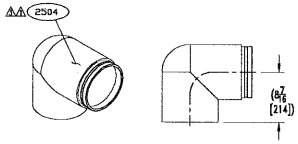

TANK T-1 OVERFLOW CONNECTION "C3" (2504)
(FEED TANK TO CUSTOMER DRAIN)
(SEE NOTE 3 THIS SHEET)

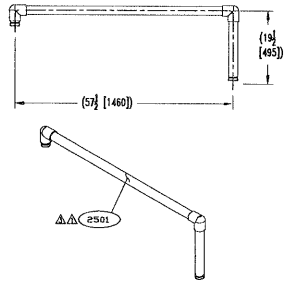

INTERCONNECT-TANK/POTABLE WATER (2501)
(FEED TANK TO ARIA AP6 CONNECTION "E")

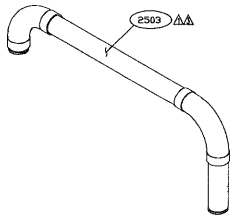

INTERCONNECT-TANK/FEED WATER (2503)
(FEED TANK TO ARIA AP6 CONNECTION "A")
SCALE: 1/20

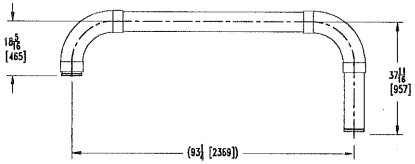

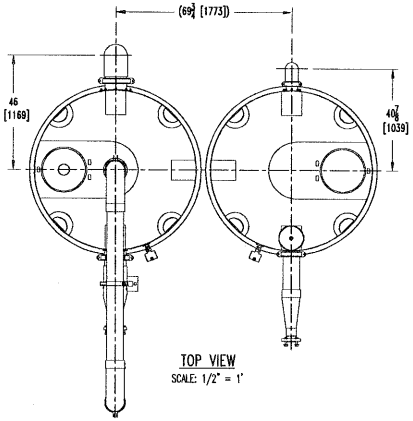

TOP VIEW
SCALE: 1/2" = 1'

DIMENSIONS PROVIDED WITHIN THIS DRAWING ARE FOR REFERENCE ONLY.

NOTES:

1.) INTERCONNECT PIPING SUPPORTS TO BE LOCATED AS CLOSE TO TANK CONNECTION AS POSSIBLE. ADJUSTMENT OF SUPPORTS TO REMOVE NOZZLE LOAD FROM TANKS IS REQUIRED.
2.) INTERCONNECT PIPING ITEMS 2500 & 2600 ARE TO BE INSTALLED PRIOR TO ALL OTHER INTERCONNECT PIPE RUNS FROM AP SKID. TANK LOCATION TO BE ADJUSTED FOR FIT-UP.
3.) TANK OVERFLOW AND DRAIN PIPING TO BE SUPPORTED AT TANK CONNECTION (BY OTHERS).
4.) ANCHOR BOLTS FOR SECURING PIPE SUPPORTS TO BE SIZED, SUPPLIED AND INSTALLED BY OTHERS.
5.) ALL TANK INTERCONNECT PIPING TO BE SHIPPED LOOSE AND TO INCLUDE 6" ADDITIONAL LENGTH PER CUT FOR FIELD FIT-UP TO PALL AUSTRALIA SUPPLIED TANKS.

△ LABEL PIPE OR EQUIPMENT FOR FIELD INSTALLATION, INSTRUMENTS TO BE PACKAGED AND LABELED ON OUTSIDE OF BOX. TEXT IS TO BE WRITTEN IN BLACK CHARACTERS ON A LAMINATED WHITE ADHESIVE LABEL, WITH A TEXT HEIGHT OF 3/16."
△ PACKAGE AND LABEL PARTS ACCORDING TO ITEM NUMBER. PACKAGES WITH MULTIPLE PARTS WILL HAVE QUANTITY INDICATED.
△ TAKE NOTE; MACHINE GROVE ON INTERCONNECT PIPING TO BE UTILIZED FOR CONNECTION TO TANKS AND SKID.

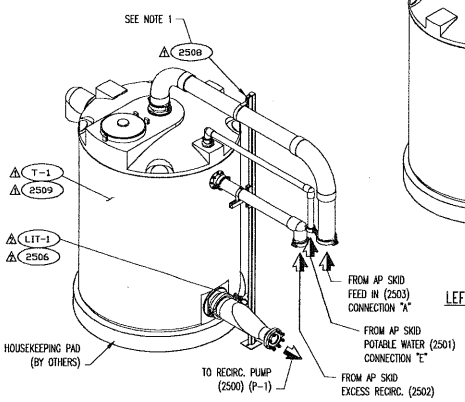

LEFT/FRONT ISOMETRIC VIEW

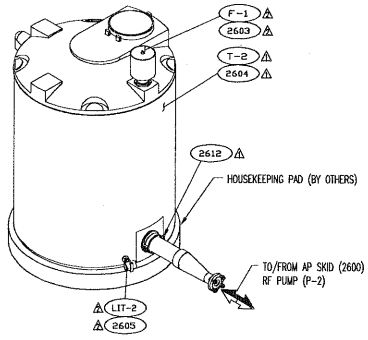

LEFT/FRONT ISOMETRIC VIEW

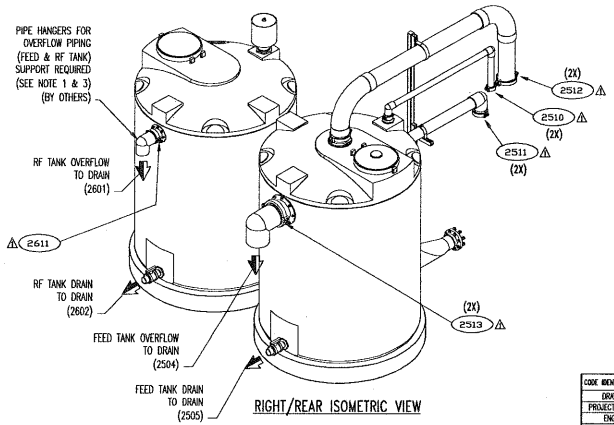

RIGHT/REAR ISOMETRIC VIEW

ITEM	QTY	UNIT	SAP NO	DESCRIPTION
2612	1	EA	12782	CLAMP,6.0IN,GRV,7000,CS,GALV,18-8BLT
2611	1	EA	12780	CLAMP,4.0IN,GRV,7000,CS,GALV,18-8BLT
2605	1	EA	10731	PRESS TRANS,ROSEMOUNT,0-30PSI (LIT-2)
2604	1	EA	12660	TANK, 1100 GAL, HDPE (T-2)
2603	1	EA	14895	FILTER, TANK VENT, 3.00 IN MPT (F-1)
2602	1	EA	-------	PIPE, ASSEMBLY, TANK T-2 DRAIN, PVC
2601	1	EA	-------	PIPE, ASSEMBLY, TANK T-2 OVERFLOW, PVC
2600	1	EA	-------	PIPE, ASSEMBLY, AP PUMP P-2 TO TANK T-2, SST
2513	2	EA	12784	CLAMP,8.0IN,GRV,7000,CS,GALV,18-8BLT
2512	2	EA	12782	CLAMP,6.0IN,GRV,7000,CS,GALV,18-8BLT
2511	2	EA	12780	CLAMP,4.0IN,GRV,7000,CS,GALV,18-8BLT
2510	2	EA	12776	CLAMP,2.0IN,GRV,7000,CS,GALV,18-8BLT
2509	1	EA	12660	TANK, 1100 GAL, HDPE (T-1)
2508	1	EA	-------	PIPE SUPPORT, EXCESS RECIRC. INTC. TO T-1, CS
2506	1	EA	10731	PRESS TRANS,ROSEMOUNT,0-30PSI (LIT-1)
2505	1	EA	-------	PIPE,ASSY,TANK T-1 DRAIN,PVC
2504	1	EA	-------	PIPE,ASSY,TANK T-1 OVERFLOW,PVC
2503	1	EA	-------	PIPE,ASSY,AP SKID CONN. "A" TO TANK T-1, PVC
2502	1	EA	-------	PIPE,ASSY,AP SKID EXCESS RECIRC. TO TANK T-1, PVC
2501	1	EA	-------	PIPE,ASSY,AP SKID CONNECTION "E" TO TANK T-1, PVC
2500	1	EA	-------	PIPE,ASSY,AP PUMP P-1 TO TANK T-1, SST

NOTE:
ALL TANK INTERCONNECT PIPING TO BE SHIPPED LOOSE AND TO INCLUDE 6" ADDITIONAL LENGTH PER CUT FOR FIELD FIT-UP TO PALL AUSTRALIA SUPPLIED TANKS.

PALL ARIA™ AP-6 SYSTEM

IMPORTANT: BEFORE ATTEMPTING TO OPERATE OR INSTALL THIS SYSTEM, IT IS ESSENTIAL TO READ AND UNDERSTAND THIS PRODUCT'S OPERATION AND MAINTENANCE MANUAL (SHIPPED UNDER SEPARATE COVER). FAILURE TO READ THE OPERATION AND MAINTENANCE MANUAL BEFORE ATTEMPTING TO OPERATE ANY PALL CORPORATION EQUIPMENT MAY RESULT IN SERIOUS PERSONAL INJURY AND/OR PRODUCT DAMAGE, AND MAY VOID ANY AND/OR ALL WARRANTIES.

CODE IDENT. NO. 17236	NAME	DATE
DRAWN BY	S. SMITH	08AUG2007
PROJECT ENGINEER	M. POOLE	21AUG2007
ENGINEER	------	------
ENGINEER	------	------
ENGINEER	------	------
CHECKER	J. HOSKINS	21AUG2007

Copyright 2007 PALL CORPORATION
This document may contain confidential technical data, including trade secrets proprietary to Pall Corporation. The drawing, design rights and all other exclusions in this document are the property of Pall Corporation. Unauthorized use, copying, distribution to third parties, manufacture, or reproduction in whole or in part is prohibited.

---> DO NOT SCALE DRAWING <---

UNLESS OTHERWISE SPECIFIED, THE FOLLOWING INFORMATION PERTAINS ONLY TO THIS SHEET

DIMENSIONS ARE IN:		TOLERANCE	
INCHES [mm]		.X ±	.XX ±
SURFACE FINISH √ (µm)	ALL ----	.X ±	FRACTION ± 1/8
	----	.XX ±	ANGLE ± 2°

PALL Pall Corporation
Pall Advanced Separations Systems
Cortland, New York

DRAWING NUMBER: 10000014584
REVISION: 00
DWG SIZE: D

DRAWING NAME: ASSY,FILTSKID,AP6,2008,R1,0DEG,QUAD,C

THIRD ANGLE PROJECTION
SCALE: 1/16
MATERIAL NUMBER
SHEET 4 OF 5

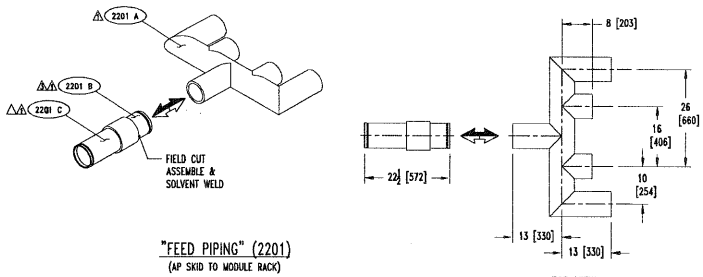

"FEED PIPING" (2201)
(AP SKID TO MODULE RACK)

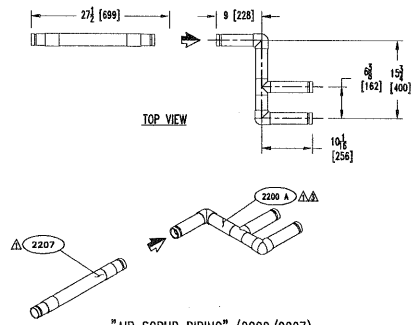

"AIR SCRUB PIPING" (2200/2207)
(AP SKID TO MODULE RACK)
(SEE NOTE 1 THIS SHEET)
SCALE: 1"=1'

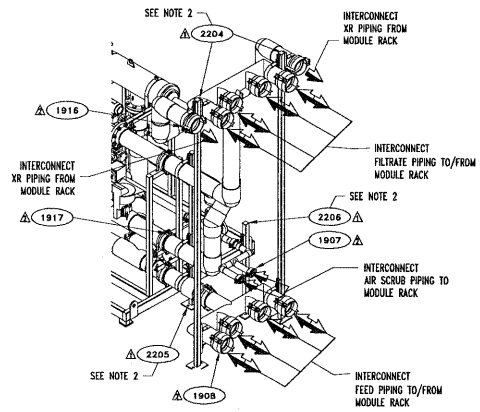

LEFT/REAR ISOMETRIC VIEW

DIMENSIONS PROVIDED WITHIN THIS DRAWING ARE FOR REFERENCE ONLY.

1. LABEL PIPE OR EQUIPMENT FOR FIELD INSTALLATION, INSTRUMENTS TO BE PACKAGED AND LABELED ON OUTSIDE OF BOX. TEXT IS TO BE WRITTEN IN BLACK CHARACTERS ON A LAMINATED WHITE ADHESIVE LABEL, WITH A TEXT HEIGHT OF 3/16."
2. PACKAGE AND LABEL PARTS ACCORDING TO ITEM NUMBER. PACKAGES WITH MULTIPLE PARTS WILL HAVE QUANTITY INDICATED.
3. TAKE NOTE; MACHINE GROVE ON INTERCONNECT PIPING TO BE UTILIZED FOR CONNECTION TO MODULE RACK AND SKID.

NOTES:

1.) INTERCONNECT PIPING ITEM 2200/2207 TO BE INSTALLED PRIOR TO ALL OTHER INTERCONNET PIPE RUNS FROM AP SKID TO MODULE RACK.
2.) INTERCONNECT PIPING SUPPORTS TO BE LOCATED AS CLOSE TO AP SKID/MODULE RACK CONNECTIONS AS POSSIBLE TO AVOID NOZZLE LOAD.

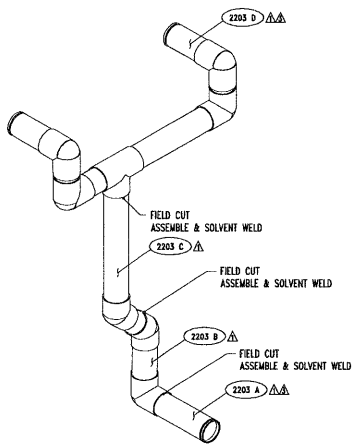

"XR PIPING" (2203)
(AP SKID TO MODULE RACK)

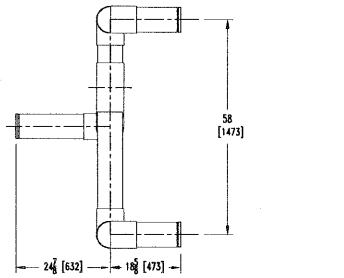

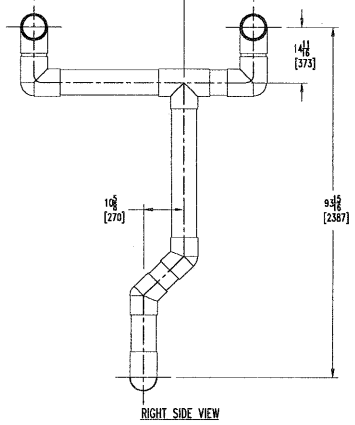

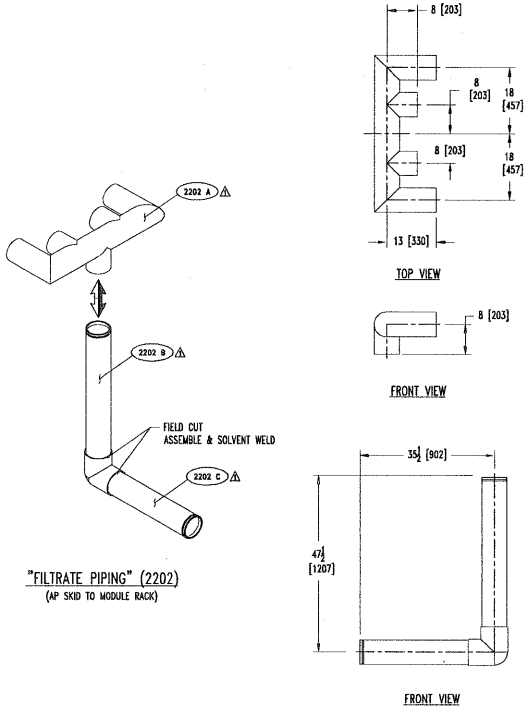

"FILTRATE PIPING" (2202)
(AP SKID TO MODULE RACK)

ITEM	QTY	UNIT	SAP NO	DESCRIPTION
2207	1	EA	19039	ASSY,AIR,HOSE,FLEX,0DEG,AP6
2206	1	EA	-------	PIPE SUPPORT, INTERCONNECT PIPE RUN SUPPORT, CS
2205	1	EA	-------	PIPE SUPPORT, INTERCONNECT PIPE RUN SUPPORT, CS
2204	2	EA	-------	PIPE SUPPORT, INTERCONNECT PIPE RUN SUPPORT, CS
2203	1	EA	-------	PIPE,ASSY,XR,SKID TO MODULE RACK,PVC
2202	1	EA	-------	PIPE,ASSY,FILT.,SKID TO MODULE RACK,PVC/HDPE
2201	1	EA	-------	PIPE,ASSY,FEED,SKID TO MODULE RACK,PVC/HDPE
2200	1	EA	-------	PIPE,ASSY,AS, SKID TO MODULE RACK,HDPE
1917	3	EA	12782	CLAMP,6.0IN,GRV,7000,CS,GALV,18-8BLT
1916	3	EA	28799	CLAMP,6.0IN,GRV,7307,CS,GALV,18-8BLT
1908	8	EA	30019	CLAMP,6.0IN,GRV,7305,CS,GALV,18-8BLT
1907	4	EA	12776	CLAMP,2.0IN,GRV,7000,CS,GALV,18-8BLT

CODE IDENT. NO. 17238	NAME	DATE
DRAWN BY	B. SMITH	08AUG2007
PROJECT ENGINEER	M. POOLE	21AUG2007
ENGINEER	----	----
ENGINEER	----	----
ENGINEER	----	----
CHECKER	J. HIGGINS	21AUG2007

--> DO NOT SCALE DRAWING <--

UNLESS OTHERWISE SPECIFIED, THE FOLLOWING INFORMATION PERTAINS ONLY TO THIS SHEET

DIMENSIONS ARE IN: INCHES [mm]

TOLERANCE: .X ± .XXX ± FRACTION ± 1/8 ANGLE ± 2°

SURFACE FINISH √ AA (µm) — .XX ±

Copyright 2007 PALL CORPORATION
This document may contain confidential technical data, including trade secrets proprietary to Pall Corporation. The drawing, design rights and all other documents in this document are the property of Pall Corporation. Unauthorized use, copying, distribution to third parties, manufacture, or reproduction in whole or in part is prohibited.

Pall Corporation
Pall Advanced Separations Systems
Cortland, New York

DRAWING NUMBER: 10000014584
REVISION: 00
DWG SIZE: D

DRAWING NAME: ASSY,FILTSKID,AP6,2008,R1,0DEG,QUAD,C

THIRD ANGLE PROJECTION
SCALE: 1/16
MATERIAL NUMBER
SHEET 5 OF 5

PALL ARIA™ AP-6 SYSTEM

IMPORTANT: BEFORE ATTEMPTING TO OPERATE OR INSTALL THIS SYSTEM, IT IS ESSENTIAL TO READ AND UNDERSTAND THIS PRODUCT'S OPERATION AND MAINTENANCE MANUAL (SHIPPED UNDER SEPARATE COVER). FAILURE TO READ THE OPERATION AND MAINTENANCE MANUAL BEFORE ATTEMPTING TO OPERATE ANY PALL CORPORATION EQUIPMENT MAY RESULT IN SERIOUS PERSONAL INJURY AND/OR PRODUCT DAMAGE, AND MAY VOID ANY AND/OR ALL WARRANTIES.

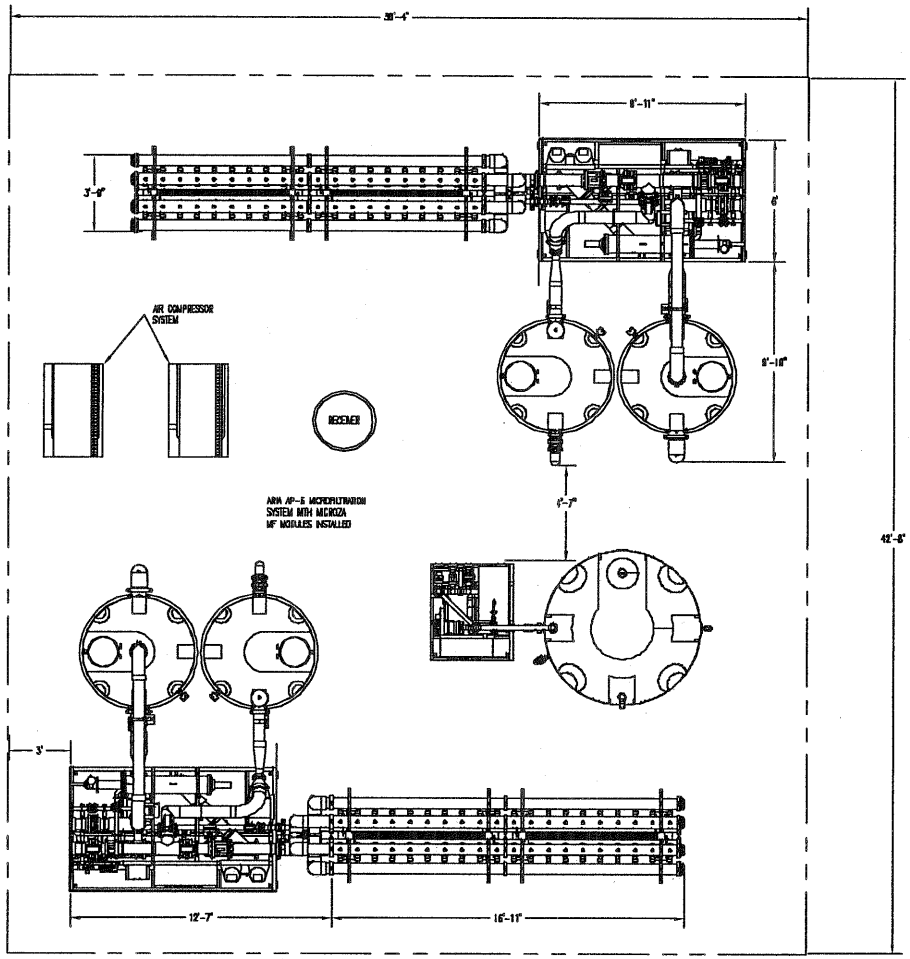

	NAME	DATE
DRAWN BY		
PROJECT ENGINEER		
CHECKER		
MANUFACTURING		
ENGINEERING MANAGER		
QUALITY CONTROL		
RELEASED BY		

COMPANY CONFIDENTIAL

--> DO NOT SCALE DRAWING <--

UNLESS OTHERWISE SPECIFIED THE FOLLOWING DIMENSIONS PERTAINS ONLY TO THIS DRAWING

DIMENSION ARE IN INCH ONLY

TOLERANCE: .X ±, .XX ±, .XXX ±, ANGLE ±

SPECIFICATION

MATERIAL USED

PRELIMINARY LAYOUT
(2) AP-6

PALL Pall Corporation
PALL TRINITY MICRO
CORTLAND, NEW YORK

PART NUMBER

DWG SIZE D

SCALE 1:32

REVISION *

DWG NO.

SHEET 1 OF SHEET 1

DATE PRINTED NONE

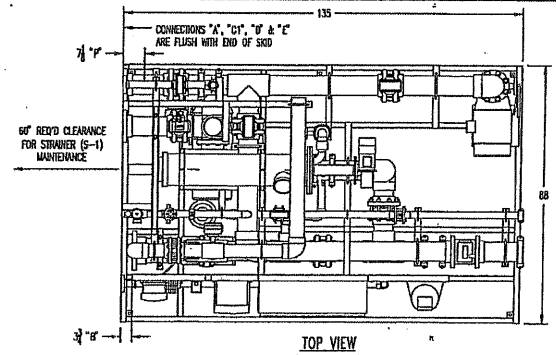

TOP VIEW
(AP6 SKID ONLY)

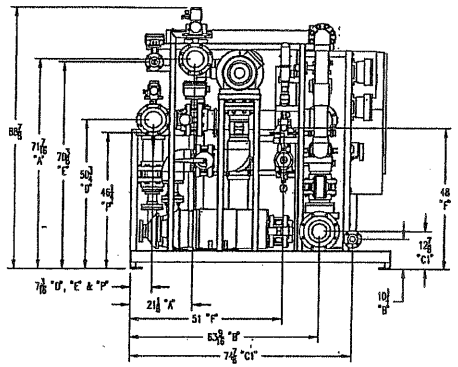

LEFT SIDE VIEW
(AP6 SKID ONLY)

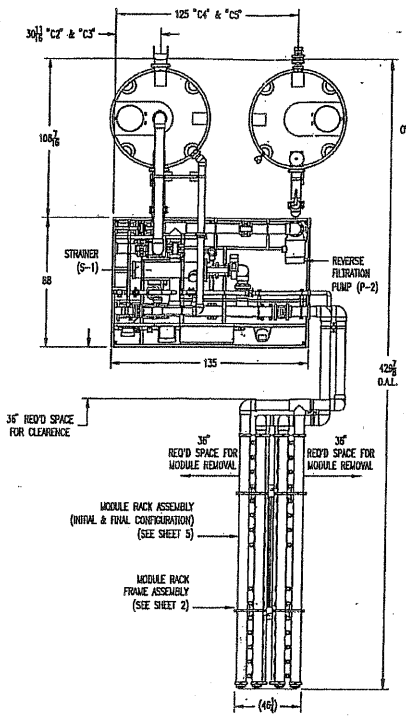

TOP VIEW

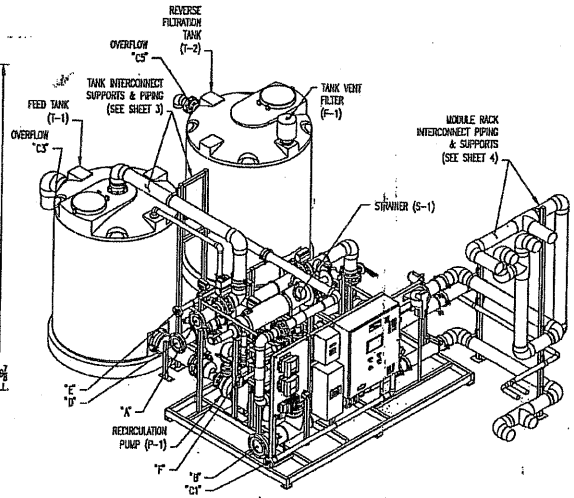

LEFT/FRONT ISOMETRIC VIEW
(REMOTE MODULE RACK REMOVED FOR CLARITY)

ARIA[SM] AP6 SYSTEM WEIGHT				
	WEIGHT			
EQUIPMENT	DRY Lbs.	DRY Kgs.	WET Lbs.	WET Kgs.
SKID	3600	1633	4100	1860
INTERCONNECT	500	227	1900	862
MODULE RACK	3500	1587.5	9000	4082
TOTAL WEIGHT	8400	3810	34000	15422

ITEM	DESCRIPTION	TYPE
P	PARTICLE COUNTER	1/2" FNPT NOTE 9
F	COMPRESSED AIR SUPPLY	1-1/2" FNPT NOTE 9
E	CIP MAKE UP WATER	2" FLG NOTE 8 & 9
D	FILTRATE FORWARD	8" FLG NOTE 8 & 9
C5	REVERSE FILTRATION TANK T-2 OVERFLOW	4" NOTE 9
C4	REVERSE FILTRATION TANK T-2 DRAIN	2" SW NOTE 9
C3	FEED TANK T-1 OVERFLOW	8" NOTE 9
C2	FEED TANK T-1 DRAIN	2" SW NOTE 9
C1	MISC. DRAIN	2" FLG NOTE 8 & 9
B	CIP/RF/AS DRAIN	8" FLG NOTE 8 & 9
A	FEED	6" FLG NOTE 8 & 9

BATTERY LIMIT CONNECTIONS

DIMENSIONS PROVIDED WITHIN THIS DRAWING ARE FOR REFERENCE ONLY. BECAUSE OF FITTING SIZE VARIATIONS, PRIOR TO MAKING FINAL WELDS, PIPING SHALL BE DRY FIT UP TO FRAME TO ENSURE PROPER ALIGNMENT OF PIPING, FLANGES, BOLT HOLES, ETC.

NOTES:

1.) DO NOT STORE THE MODULES OR THEIR SHIPPING CONTAINERS OUTSIDE OR IN AN AREA WHERE THERE WILL BE EXPOSURE TO DIRECT SUNLIGHT, EXCESSIVE HEAT, OR COLD. PALL CORPORATION REQUIRES MEMBRANES BE STORED IN A CONTROLLED, SECURE ENVIRONMENT TO GUARANTEE MODULES ARE NOT DAMAGED DURING STORAGE
2.) DO NOT DROP OR EXPOSE THE MODULES OR THEIR SHIPPING CONTAINERS TO SHOCK OR IMPACT. THERE MAY BE DAMAGE TO THE MEMBRANE EVEN IF NO VISIBLE DAMAGE TO THE MODULE CASE IS EVIDENT.
3.) THE MODULE RACK ASSEMBLY, INTERCONNECT PIPING ASSEMBLY, AND TANKS WILL BE SHIPPED SEPARATELY FOR INSTALLATION IN THE FIELD.
4.) THIS DRAWING SHOWS (1) COMPLETE AP6 ASSEMBLY.
5.) THE DISKS ON ELASTOMER-SEATED BUTTERFLY VALVES MUST BE AT LEAST PARTIALLY OPEN WHEN TIGHTENING FLANGE BOLTS. FAILURE TO DO SO WILL CAUSE PREMATURE FAILURE, AND WILL VOID ALL WARRANTIES ON THE VALVE.
6.) REFER TO INSTALLATION INSTRUCTIONS FOR PIPING ASSEMBLY.
7.) THE CONTROL ENCLOSURE IS CONSTRUCTED OF CARBON STEEL, PAINTED BLUE AND RATED NEMA 4. THE USE OF ALL CONDUIT PENETRATION HUBS OF THE SAME ENVIRONMENTAL RATING AS THE ENCLOSURE IS REQUIRED.
DO NOT PENETRATE THE TOP OF THE ENCLOSURE.
8.) ALL FLANGES ARE BOLT CIRCLE/HOLE SIZE EQUIVALENT TO ANSI 150# RATED FLANGES.
9.) PIPING, CONNECTING TO PALL EQUIPMENT, MUST BE ADEQUATELY SUPPORTED TO PREVENT ANY NOZZLE LOADS ON THE EQUIPMENT.
DO NOT USE SKID CONNECTIONS TO SUPPORT PIPING.

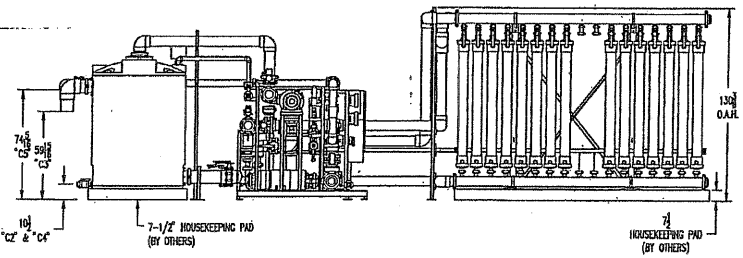

LEFT SIDE VIEW

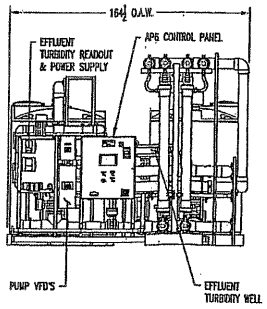

FRONT VIEW

TABLE OF CONTENTS

SHEET #	DESCRIPTION
1	TOP SYSTEM ASSEMBLY
2	FOOTPRINT LAYOUT/MODULE RACK FRAME ASSEMBLY
3	TANK TO AP SKID INTERCONNECTING PIPING DETAIL
4	AP SKID TO MODULE RACK INTERCONNECTING PIPING DETAIL
5	MODULE RACK ASSEMBLY

"ARIA" IS A SERVICE MARK OF PALL CORPORATION.

CODE IDENT. NO. 17228	NAME	DATE
DRAWN BY	S. SMITH	05/27/2003
PROJECT ENGINEER	K. FOULC	05/27/2003
ENGINEER		
ENGINEER		
ENGINEER		
CHECKER	B. CLARK	05/27/2003

COMPANY CONFIDENTIAL
This information is the proprietary PALL CORPORATION, and is furnished for use of the designed recipient only. No copies are to be made and the material published herein is not to be divulged to others, either within or outside PALL CORPORATION, without written approval of an officer of PALL CORPORATION.

---> DO NOT SCALE DRAWING <---
UNLESS OTHERWISE SPECIFIED, THE FOLLOWING INTERPRETATION PERTAINS ONLY TO THIS SHEET
DIMENSIONS ARE IN: INCHES ONLY
REFERENCE: SIZE A, SIZE B, SIZE C, SIZE D, SIZE E
SURFACE / ALAN ___ / MICRO ___ (µin) ___ SIZE A, SIZE B, SIZE C, SIZE D, SIZE E

PALL Pall Corporation
PALL ADVANCED SEPARATIONS SYSTEMS
CORTLAND, NEW YORK

DRAWING NUMBER 10000000283 | REVISION 00 | DWG SIZE D

DRAWING NAME SYSTEM MF, 02.00013 Z5006

THIRD ANGLE PROJECTION | SCALE 1/40 | MATERIAL TRACKER 15413 | SHEET 1 OF 5

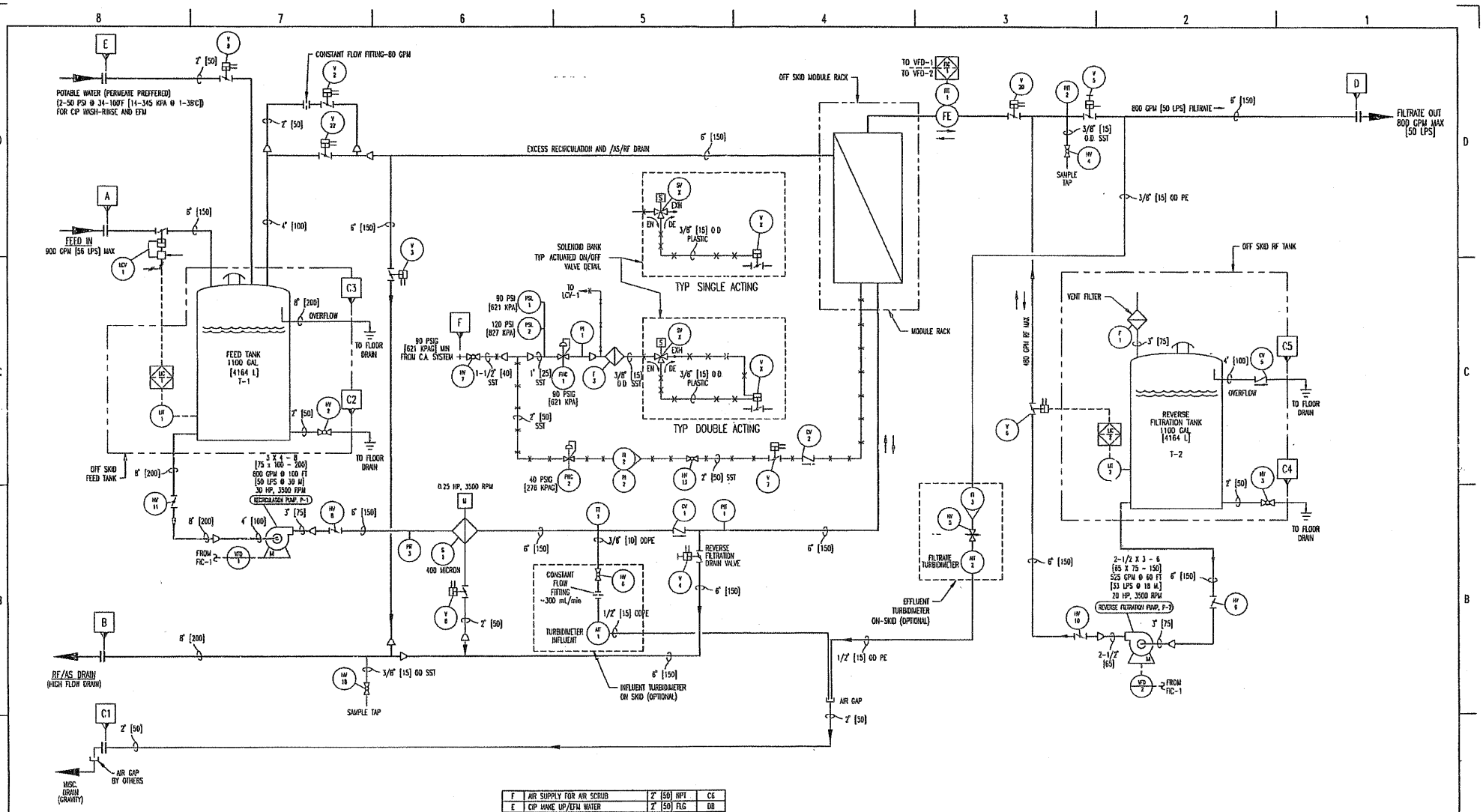

ITEM	DESCRIPTION	TYPE	ZONE
F	AIR SUPPLY FOR AIR SCRUB	2" [50] NPT	C6
E	CIP MAKE UP/EFM WATER	2" [50] FLG	D8
D	FILTRATE FORWARD	6" [150] FLG	D1
C5	MISC. DRAIN OVERFLOW (RF TANK)	4" [100] SW	C2
C3	MISC. DRAIN OVERFLOW (FEED TANK)	6" [150] SW	C7
C2/4	MISC. DRAIN (FEED & RF TANK)	2" [50] SW	B2/C7
C1	MISC. DRAIN (SKID)	2" [50] FLG	A8
B	CIP/RF/AS DRAIN	8" [200] FLG	B8
A	FEED	6" [150] FLG	C8

BATTERY LIMIT CONNECTIONS

NOTES:
1. AIR SUPPLY: CLEAN, DRY, AND OIL FREE INSTRUMENT GRADE AIR @ 90 PSIG MIN. DELIVERY PRESSURE; 4 SCFM/MODULE + 0.5 CFM FOR VALVES
2. ELECTRICAL SUPPLY: 460VAC
3. ALL FLOWS SHOWN ARE MAXIMUM
4. ALL PIPING IS SCHEDULE 40 PVC U.O.N.

LEGEND
(PALL) (PURCHASER) BATTERY LIMIT - PIPING AND TUBING

IMPORTANT: BEFORE ATTEMPTING TO OPERATE OR INSTALL THIS SYSTEM, IT IS ESSENTIAL TO READ AND UNDERSTAND THIS PRODUCT'S OPERATION AND MAINTENANCE MANUAL (SHIPPED UNDER SEPARATE COVER). FAILURE TO READ THE OPERATION AND MAINTENANCE MANUAL BEFORE ATTEMPTING TO OPERATE ANY PALL CORPORATION EQUIPMENT MAY RESULT IN SERIOUS PERSONAL INJURY AND/OR PRODUCT DAMAGE, AND MAY VOID ANY AND/OR ALL WARRANTIES.

COOK DCN'L NO. 17238	NAME	DATE
DRAWN BY	S. SMITH	30MAY2004
PROJECT ENGINEER	M. POOLE	30MAY2004
ENGINEER	------	------
ENGINEER	------	------
ENGINEER	------	------
CHECKER	J. HIGGINS	30MAY2004

--> DO NOT SCALE DRAWING <--
UNLESS OTHERWISE SPECIFIED, THE FOLLOWING INFORMATION PERTAINS ONLY TO THIS SHEET
DIMENSIONS ARE IN INCHES ONLY
TOLERANCE: .XXX ±, .XX ±, .X ±, FRACTIONAL 1/8, ANGLE ±2°
SURFACE FINISH ARE (µm) .X ±

Copyright 2004 PALL CORPORATION
This document may contain confidential technical data, including trade secrets proprietary to Pall Corporation. The drawing, design rights and all other disclosures in this document are the property of Pall Corporation. Unauthorized use, copying, distribution to third parties, reproduction or reproduction in whole or in part is prohibited.

PALL Pall Corporation
Pall Advanced Separations Systems
Cortland, New York

DRAWING NUMBER: 10000001350
REVISION: 00
DWG SIZE: D
DRAWING NAME: SYSTEM,MF,AP6,2004,STOCK,R1,P&ID
THIRD ANGLE PROJECTION
SCALE: NONE
MATERIAL NUMBER
SHEET 2 OF 4

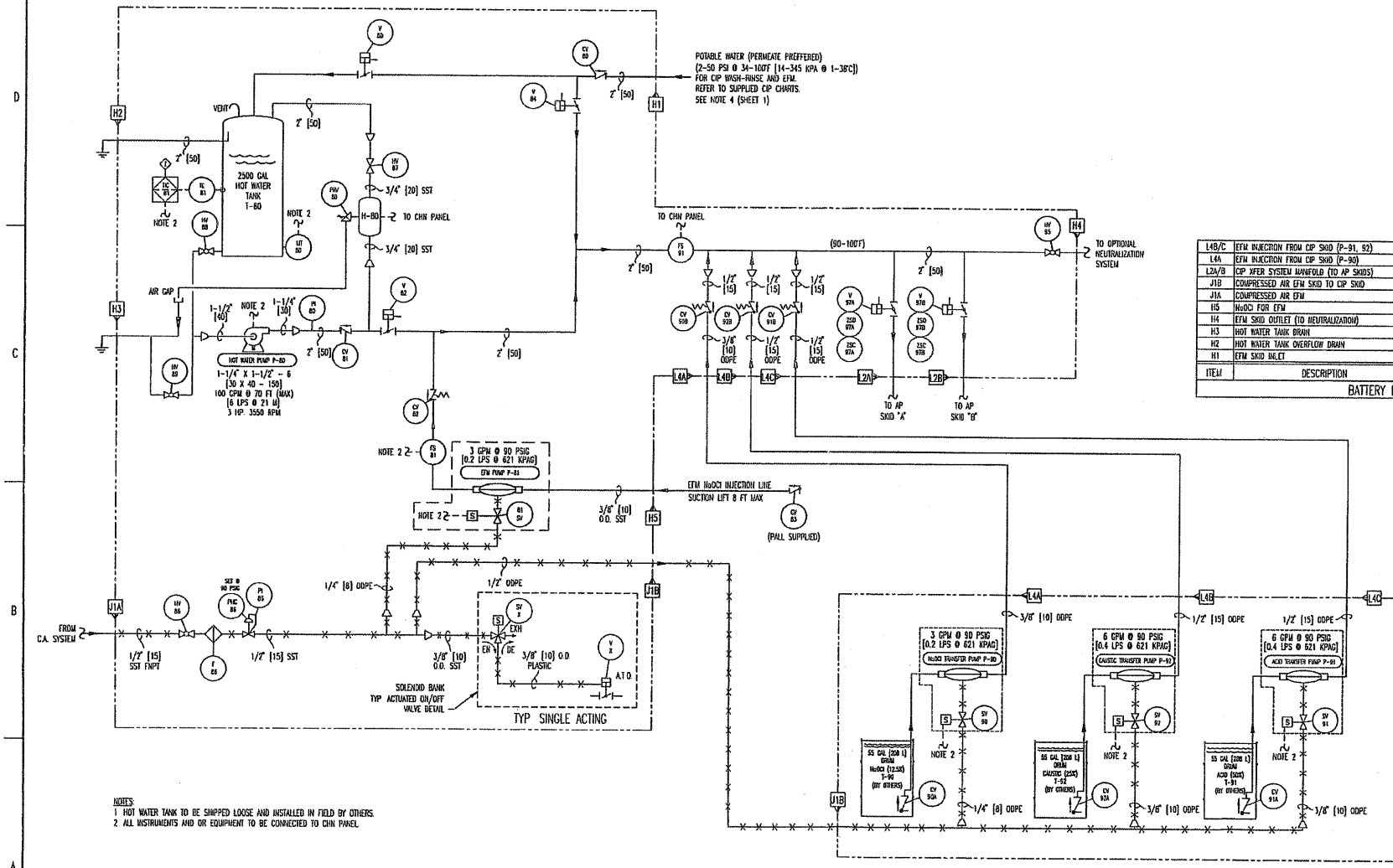

ITEM	DESCRIPTION	TYPE		MAT'L	ZONE
L4B/C	EFM INJECTION FROM CIP SKID (P-91, 92)	1/2"	[15]	TUBE	ODPE	B2,3/C5
L4A	EFM INJECTION FROM CIP SKID (P-90)	3/8"	[10]	TUBE	ODPE	B4, C5
L2A/B	CIP XFER SYSTEM MANIFOLD (TO AP SKIDS)	2"	[50]	FLG	PVC	C4
J1B	COMPRESSED AIR EFM SKID TO CIP SKID	1/2"	[15]	FNPT	ODPE	A4/B5
J1A	COMPRESSED AIR EFM	1/2"	[15]	FNPT	SST	B8
H5	NaOCl FOR EFM	3/8"	[10]	TUBE	PE	B5
H4	EFM SKID OUTLET (TO NEUTRALIZATION)	2"	[50]	FLG	PVC	C3
H3	HOT WATER TANK DRAIN	1"	[25]	FLG	PVC	C8
H2	HOT WATER TANK OVERFLOW DRAIN	2"	[50]	SW	PVC	D8
H1	EFM SKID INLET	2"	[50]	FLG	PVC	D5

BATTERY LIMIT TABLE

NOTES:
1 HOT WATER TANK TO BE SHIPPED LOOSE AND INSTALLED IN FIELD BY OTHERS.
2 ALL INSTRUMENTS AND OR EQUIPMENT TO BE CONNECTED TO CHN PANEL.

IMPORTANT: BEFORE ATTEMPTING TO OPERATE OR INSTALL THIS SYSTEM, IT IS ESSENTIAL TO READ AND UNDERSTAND THIS PRODUCTS OPERATION AND MAINTENANCE MANUAL (SHIPPED UNDER SEPARATE COVER). FAILURE TO READ THE OPERATION AND MAINTENANCE MANUAL BEFORE ATTEMPTING TO OPERATE ANY PALL CORPORATION EQUIPMENT MAY RESULT IN SERIOUS PERSONAL INJURY AND/OR PRODUCT DAMAGE AND MAY VOID ANY AND/OR ALL WARRANTIES.

CODE IDENT. NO. 17235	NAME	DATE
DRAWN BY	L. SMITH	10/MAY/2004
PROJECT ENGINEER	M. POOLE	10/MAY/2004
ENGINEER	------	------
ENGINEER	------	------
ENGINEER	------	------
CHECKER	A. HOPKINS	10/MAY/2004

--> DO NOT SCALE DRAWING <---
UNLESS OTHERWISE SPECIFIED, USE FOLLOWING INFORMATION FOCUSING ONLY TO THIS SHEET
DIMENSIONS ARE IN: INCHES ONLY
TOLERANCE: .X ± .1; .XX ± .05; FRACTIONS ± 1/8; ANGLE ± 1°
SURFACE FINISH: µin (µm) ___
3RD ANGLE PROJECTION
SCALE: NONE
MATERIAL NUMBER

Copyright 2004 PALL CORPORATION
This document may contain confidential technical data, including trade secrets proprietary to Pall Corporation. The drawing, design rights and all other disclosures in this document are the property of Pall Corporation. Unauthorized use, copying, distribution to third parties, manufacture, or reproduction in whole or in part is prohibited.

PALL® Pall Corporation
Pall Advanced Separations Systems
Cortland, New York

DRAWING NUMBER: 10000001350
REVISION: 00
DWG SIZE: D

DRAWING NAME: SYSTEM,MF,AP6,2004,STOCK,R1,P&ID

SHEET 3 OF 4

VALVE SYMBOLS

- GATE VALVE OR MISCELLANEOUS
- GLOBE VALVE
- CHECK VALVE
- SPRING LOADED CHECK VALVE
- PLUG VALVE
- 3-WAY PLUG VALVE
- ROTARY/BALL VALVE
- BUTTERFLY VALVE (W/ PNEUMATIC ACTUATOR)
- BUTTERFLY VALVE (HAND)
- NEEDLE VALVE
- ANGLE VALVE
- CONTROL VALVE
- FLOAT VALVE
- AIR RELEASE VALVE
- BACKFLOW PREVENTER
- DIAPHRAGM VALVE
- SAFETY RELIEF VALVE
- 2 WAY SOLENOID VALVE
- 3 WAY SOLENOID VALVE (DE, EX)
- 4 WAY SOLENOID VALVE
- PNEUMATIC ACTUATOR CONTROL VALVE
- PRESSURE REDUCING VALVE (REGULATOR)
- POSITIONER & CYLINDER AIR TO CLOSE SINGLE ACTING (A.T.C.)
- POSITIONER & CYLINDER AIR TO OPEN SINGLE ACTING (A.T.O.)
- POSITIONER & CYLINDER AIR TO AIR DOUBLE ACTING (A.T.A.)

TYPICAL SYMBOLS

- CONTAINMENT
- UNDEFINED SIGNAL
- PNEUMATIC SIGNAL
- COMPRESSED AIR PIPING
- ELECTRIC SIGNAL
- FIELD MOUNTED DEVICE
- PANEL FACE MOUNTED DEVICE
- INSIDE OF PANEL MOUNTED DEVICE
- DEVICE MOUNTED ON AUXILIARY PANEL FACE
- DEVICE MOUNTED INSIDE OF AUXILIARY PANEL
- PROGRAMMABLE LOGIC CONTROLLER IN MAIN PANEL
- PROGRAMMABLE LOGIC CONTROLLER IN AUXILIARY PANEL
- DISPLAY ON MAIN PANEL
- COMPUTER FUNCTION PRIMARY LOCATION
- COMPUTER FUNCTION AUXILIARY LOCATION
- MESSAGE DISPLAY ON CRT
- ELECTRIC OPERATOR
- INTERLOCK
- MAGNETIC FLOWMETER W/ INTEGRAL ELECTRONICS
- VARIABLE AREA FLOWMETER
- GEAR/DISPLACEMENT FLOWMETER
- ACTUATOR, W/ TRAVEL STOPS
- ACTUATOR, AIR TO CLOSE (SINGLE ACTING) (A.T.C.)
- ACTUATOR, AIR TO OPEN (SINGLE ACTING) (A.T.O.)
- ACTUATOR, AIR TO CLOSE & AIR TO OPEN (DOUBLE ACTING) (A.T.A.)
- TWO (2) ITEMS IN ONE (1) DEVICE
- FLOW CONVERTER (ADD IDENTIFYING INFORMATION OUTSIDE BALLOON TO CLARIFY FUNCTION OF ITEM INSIDE BALLOON, EXT. I/P: CURRENT TO PNEUMATIC CONVERTER)
- MANWAY

TYPICAL SYMBOLS

- DRAIN
- HUB DRAIN
- DIAPHRAGM SEAL
- BUTTERFLY VALVE WITH FIXED ORIFICE IN DISC
- SLIP JOINT/EXPANSION CONNECTION
- MANUAL VALVE OPERATOR
- (CUSTOMER) (PALL) CUSTOMER CONNECTION
- (CUSTOMER) (PALL) ELECTRICAL CONNECTION
- SPRAY BALL
- AIR VENT
- PILOT LIGHT

COLOR CODE
R=RED
A=AMBER
G=GREEN
B=BLUE
W=WHITE

- SIGHT GLASS
- SWING ELBOW
- INSULATED EQUIPMENT
- STEAM OR ELECTRICAL TRACED WITH INSULATION
- ELECTRICAL HEAT TRACE
- ITEM OR EQUIPMENT NO.
- EDUCTOR (W/ GATE VALVE & FUNNEL)

TYPICAL SYMBOLS

- ANTIFOAM INLET
- 'Y' STRAINER
- STRAINER/FILTER
- CONSTANT FLOW FITTING
- FLEXIBLE CONNECTOR/ EXPANSION JOINT
- FLEXIBLE REDUCER
- REDUCER
- FLANGED CONNECTION
- AIR GAP
- CAPPED OR PLUGGED CONNECTION

PUMP SYMBOLS

- CENTRIFUGAL PUMP
- ROTARY PUMP
- (TUBING) PERISTALTIC PUMP
- DOUBLE HEAD PERISTALTIC PUMP
- MOTORIZED DIAPHRAGM PUMP
- PNEUMATIC DIAPHRAGM PUMP
- METERING PUMP
- VERTICAL PUMP
- SUBMERGED PUMP

FLOW INSTRUMENTS

FC	FLOW CONTROLLER (BLIND)
FCV	FLOW CONTROL VALVE
FE	FLOW ELEMENT
FFC	FLOW RATIO CONTROLLER
FG	FLOW SIGHT GLASS
FI	FLOW INDICATOR
FIC	FLOW INDICATOR CONTROLLER
FIT	FLOW INDICATOR TRANSMITTER
FM	FLOW METER
FQ	FLOW TOTALIZER
FQC	FLOW TOTALIZER CONTROLLER
FR	FLOW RECORDER
FRC	FLOW RECORDER CONTROLLER
FSH	FLOW SWITCH HIGH
FSHH	FLOW SWITCH HIGH HIGH
FSL	FLOW SWITCH LOW
FSLL	FLOW SWITCH LOW LOW
FT	FLOW TRANSMITTER (BLIND)
FX	FLOW INTEGRATOR

PRESSURE INSTRUMENTS

DSPI	DIFFERENTIAL SET POINT INDICATOR
PC	PRESSURE CONTROLLER (BLIND)
PCV	PRESSURE CONTROL VALVE
PDC	PRESSURE DIFFERENTIAL CONTROLLER
PDH	DIFFERENTIAL PRESSURE HIGH
PDHH	DIFFERENTIAL PRESSURE HIGH HIGH
PDI	DIFFERENTIAL PRESSURE INDICATOR
PDS	DIFFERENTIAL PRESSURE SWITCH
PHC	PRESSURE HAND CONTROL (REGULATOR)
PI	PRESSURE INDICATOR
PIC	PRESSURE INDICATING CONTROLLER
PIS	PRESSURE INDICATING SWITCH
PIT	PRESSURE INDICATING TRANSMITTER
PLH	PRESSURE LIMIT HIGH
PR	PRESSURE RECORDER
PRC	PRESSURE RECORDER CONTROLLER
PSH	PRESSURE SWITCH HIGH
PSHH	PRESSURE SWITCH HIGH HIGH
PSL	PRESSURE SWITCH LOW
PSLL	PRESSURE SWITCH LOW LOW
PT	PRESSURE TRANSMITTER (BLIND)

LEVEL INSTRUMENTS

LC	LEVEL CONTROLLER (BLIND)
LCV	LEVEL CONTROL VALVE
LE	LEVEL ELEMENT
LG	LEVEL GAGE GLASS
LI	LEVEL INDICATOR
LIC	LEVEL INDICATOR CONTROLLER
LIT	LEVEL INDICATING TRANSMITTER
LR	LEVEL RECORDER
LRC	LEVEL RECORDING CONTROLLER
LSH	LEVEL SWITCH HIGH
LSHH	LEVEL SWITCH HIGH HIGH
LSL	LEVEL SWITCH LOW
LSLL	LEVEL SWITCH LOW LOW
LSM	LEVEL SWITCH MID
LT	LEVEL TRANSMITTER (BLIND)

TEMPERATURE INSTRUMENTS

TC	TEMPERATURE CONTROLLER (BLIND)
TCV	TEMPERATURE CONTROL VALVE
TE	TEMPERATURE ELEMENT
TI	TEMPERATURE INDICATOR
TIC	TEMPERATURE INDICATING CONTROLLER
TIT	TEMPERATURE INDICATING TRANSMITTER
TLH	TEMPERATURE LIMIT HIGH
TR	TEMPERATURE RECORDER
TRC	TEMPERATURE RECORDER CONTROLLER
TSH	TEMPERATURE SWITCH HIGH
TSHH	TEMPERATURE SWITCH HIGH HIGH
TSL	TEMPERATURE SWITCH LOW
TSLL	TEMPERATURE SWITCH LOW LOW
TT	TEMPERATURE TRANSMITTER

MISCELLANEOUS

AE	ANALYTICAL ELEMENT
AIT	ANALYTICAL INDICATING TRANSMITTER
A.S.	AIR SUPPLY
A.T.A.	AIR TO ACTIVATE
A.T.C.	AIR TO CLOSE
A.T.O.	AIR TO OPEN
CV	CHECK VALVE
DE	DE-ENERGIZE
DPI	DIFFERENTIAL PRESSURE INDICATOR
E	ENERGIZE
EX	EXHAUST
H	HEATER
HV	HAND VALVE (MANUAL)
I/P	CURRENT TO PNEUMATIC TRANSDUCER
LS	LIMIT SWITCH
M	MECHANICAL DEVICE/MISCELLANEOUS
N.C.	NORMALLY CLOSED
N.O.	NORMALLY OPEN
NV	NEEDLE VALVE
O/C/A	OPEN-CLOSE-AUTO
ORP	OXIDATION REDUCTION POTENTIAL
P	PUMP
P/A	PULSE TO ANALOG
P/I	PNEUMATIC TO CURRENT TRANSDUCER
PRD	PRESSURE RUPTURE DISK
PS	PUMP SPEED
REV.	REVERSING
SG	SIGHT GLASS
S.P.	SET POINT
SS	SELECTOR SWITCH
SV	SOLENOID VALVE
T	TANK
TS	TRAVEL STOP
TYP	TYPICAL
UA	MULTIVARIABLE ALARM
UON	UNLESS OTHERWISE NOTED
V	VALVE (ACTUATED)
VFC	VOLT FREE CONTACT
VFD	VARIABLE FREQUENCY DRIVE
Y	COINVERTER

IMPORTANT: BEFORE ATTEMPTING TO OPERATE OR INSTALL THIS SYSTEM, IT IS ESSENTIAL TO READ AND UNDERSTAND THIS PRODUCTS OPERATION AND MAINTENANCE MANUAL (SHIPPED UNDER SEPARATE COVER). FAILURE TO READ THE OPERATION AND MAINTENANCE MANUAL BEFORE ATTEMPTING TO OPERATE ANY PALL CORPORATION EQUIPMENT MAY RESULT IN SERIOUS PERSONAL INJURY AND/OR PRODUCT DAMAGE, AND MAY VOID ANY AND/OR ALL WARRANTIES.

CODE IDENT. NO. 17238	NAME	DATE
DRAWN BY	S. SMITH	2004/2/24
PROJECT ENGINEER	M. POOLE	2004/2/24
ENGINEER	—	—
ENGINEER	—	—
ENGINEER	—	—
CHECKER	J. HIGGINS	2004/2/24

--> DO NOT SCALE DRAWING <--

UNLESS OTHERWISE SPECIFIED, THE FOLLOWING INFORMATION PERTAINS ONLY TO THIS SHEET

DIMENSIONS ARE IN: INCHES ONLY

TOLERANCE: ANGLE ±1/8; FRACTION ±1/64; DECIMAL .X ±; .XX ±; .XXX ±; ANGLE ±°

Copyright 2004 PALL CORPORATION
This document may contain confidential technical data, including trade secrets proprietary to Pall Corporation. The owning design rights and all other disclosures in this document are the property of Pall Corporation. Unauthorized use, copying, distribution to third parties, reproduction, or reproduction in whole or in part is prohibited.

PALL Pall Corporation
Pall Advanced Separations Systems
Cortland, New York

DRAWING NUMBER: 10000001350 | REVISION: 00 | DWG SIZE: D

DRAWING NAME: SYSTEM,MF,AP6,2004,STOCK,R1,P&ID

FIRST ANGLE PROJECTION | SCALE: NONE | WEIGHT NUMBER | SHEET 4 OF 4

APPENDIX F

2005-2066 WATER TREATMENT PILOT STUDY REPORT

APPENDIX F

2005-2006 WATER TREATMENT PILOT STUDY REPORT

Purification Technology Inc.

LIGHT MEDIA ADSORPTION CLARIFICATION AND MIXED MEDIA FILTRATION
CONVENTIONAL CLARIFICATION AND MIXED MEDIA FILTRATION

PILOT STUDIES REPORT

November 1 to December 16, 2005; and July 10 to July 31, 2006

City of Kotzebue, Alaska
Kotzebue, Alaska

Purification Technology, Inc.
543 Park Ave.
Pagosa Springs, CO 81147
Phone: (970) 731-2344
Fax: (970) 731-2568
E-Mail: purificationtech@yahoo.com

By:
Karl E. Henriksson Jr., P. E.
Robert E. Thompson
October 30, 2006

EQUIPMENT AND METHODOLOGY USED

INTRODUCTION

Purification Technology Inc. of Rangely, CO; in cooperation with the city of Kotzebue, AK; conducted two pilot studies, from November 1, 2005 to December 16, 2005 and from July 10, 2006 to July 31, 2006.

The tests were conducted using two portable pilot plants. The contact adsorption clarification (CAC) pilot plant consists of chemical feed equipment, an upflow adsorption clarifier, and a mixed media filter. The CAC plant was tested during both studies. The conventional treatment pilot plant consists of chemical feed equipment, a 60° plate settler, and a mixed media filter. The conventional plant was tested only during the winter pilot study. All of the plant equipment and the laboratory were built on site. The plant descriptions begin on Page 8 of this report.

The raw water for this study was drawn from Devil's Lake, at the existing Kotzebue, AK treatment plant. Jar and bench testing of the water from Vortac Lake showed that the treatment scheme was the same as for water from Devil's Lake.

STUDY SCOPE

The studies covered in this report, in November-December 2005 and July 2006, respectively; are designed to test the raw water during winter and summer conditions.

CAC plant. All treatment chemicals were fed just ahead of the first of three flocculation tanks in the conventional plant.

During the summer study, alum, soda ash, and potassium permanganate were fed into the entrance of a 1-hour detention chamber (Detention Chamber 1), and then entered a second 30-minute detention chamber (Detention Chamber 2), where activated carbon was fed. After Detention Chamber 2; EC-473 and CMI-633 were fed just ahead of the upflow adsorption clarifier in the CAC plant. The conventional plant was not used during the summer study.

The raw water turbidity is measured manually on a HACH 2100N turbidimeter hourly. The HACH 2100N turbidimeter was standardized using HACH StabilCal® standards.

Color and pH were obtained from the same sample points as the turbidity samples. Color concentrations were determined using a HACH Odyssey DR/2500 spectrophotometer. The spectrophotometer was calibrated for color measurements by using known dilutions of a platinum cobalt standard solution. pH was measured on a HACH pH meter with 0.10 millivolt resolution. The meter was calibrated using HACH prepared buffer solutions with pH values of 4, 7, and 10.

Continuous headloss data was taken from electronic differential pressure transducers placed at the base of the influent and effluent of the clarifier and filter of the CAC plant, and at the base of the filter of the conventional plant. All of the pressure transducers are calibrated with a manometer.

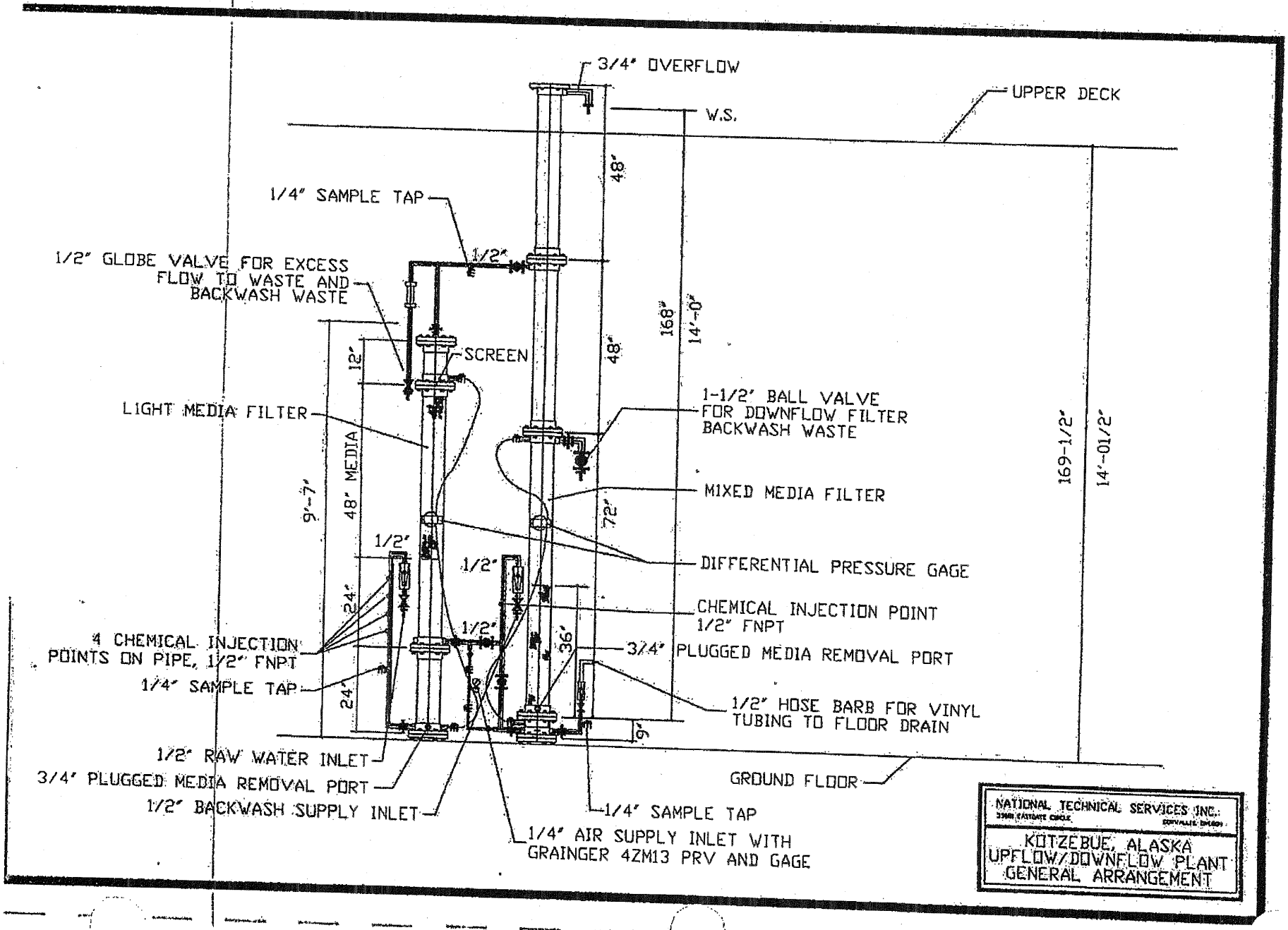
3/4" OVERFLOW
W.S.
UPPER DECK
48"
1/4" SAMPLE TAP
1/2"
1/2" GLOBE VALVE FOR EXCESS FLOW TO WASTE AND BACKWASH WASTE
168"
14'-0"
12"
SCREEN
48"
LIGHT MEDIA FILTER
1-1/2" BALL VALVE FOR DOWNFLOW FILTER BACKWASH WASTE
169-1/2"
14'-01/2"
9'-7"
48" MEDIA
MIXED MEDIA FILTER
72"
1/2"
1/2"
DIFFERENTIAL PRESSURE GAGE
24"
CHEMICAL INJECTION POINT 1/2" FNPT
1/2"
36"
3/4" PLUGGED MEDIA REMOVAL PORT
4 CHEMICAL INJECTION POINTS ON PIPE, 1/2" FNPT
1/4" SAMPLE TAP
24"
18"
1/2" HOSE BARB FOR VINYL TUBING TO FLOOR DRAIN
9"
1/2" RAW WATER INLET
3/4" PLUGGED MEDIA REMOVAL PORT
GROUND FLOOR
1/2" BACKWASH SUPPLY INLET
1/4" SAMPLE TAP
1/4" AIR SUPPLY INLET WITH GRAINGER 4ZM13 PRV AND GAGE
NATIONAL TECHNICAL SERVICES INC.
KOTZEBUE, ALASKA
UPFLOW/DOWNFLOW PLANT
GENERAL ARRANGEMENT

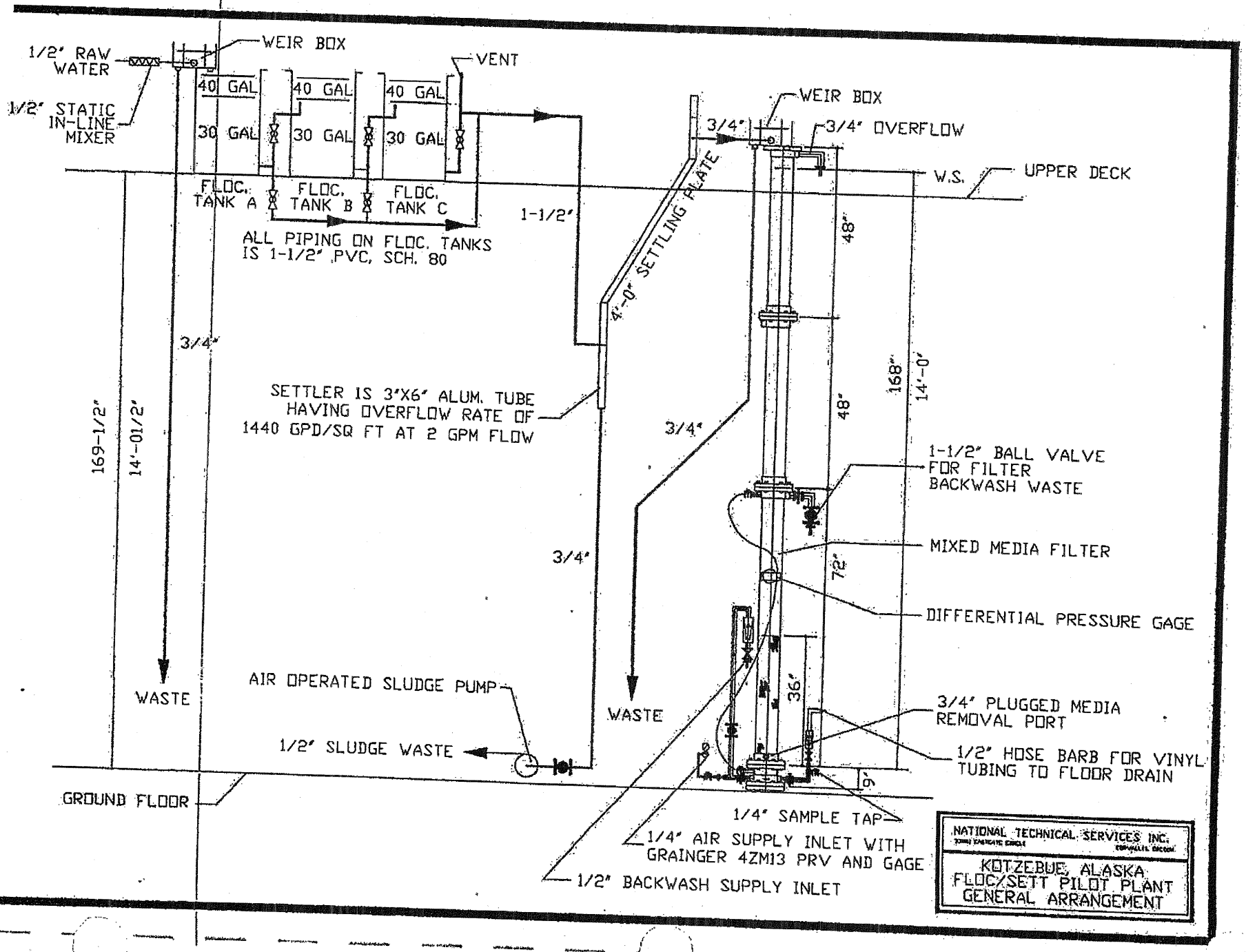
1/2" RAW WATER
WEIR BOX
VENT
1/2" STATIC IN-LINE MIXER
40 GAL
40 GAL
40 GAL
30 GAL
30 GAL
30 GAL
FLOC. TANK A
FLOC. TANK B
FLOC. TANK C
ALL PIPING ON FLOC. TANKS IS 1-1/2" PVC, SCH. 80
1-1/2"
4'-0" SETTLING PLATE
WEIR BOX
3/4"
3/4" OVERFLOW
W.S.
UPPER DECK
48"
48"
168"
14'-0"
169-1/2"
14'-01/2"
3/4"
SETTLER IS 3"X6" ALUM. TUBE HAVING OVERFLOW RATE OF 1440 GPD/SQ FT AT 2 GPM FLOW
3/4"
3/4"
1-1/2" BALL VALVE FOR FILTER BACKWASH WASTE
MIXED MEDIA FILTER
72"
DIFFERENTIAL PRESSURE GAGE
WASTE
WASTE
AIR OPERATED SLUDGE PUMP
36"
3/4" PLUGGED MEDIA REMOVAL PORT
1/2" SLUDGE WASTE
1/2" HOSE BARB FOR VINYL TUBING TO FLOOR DRAIN
9"
GROUND FLOOR
1/4" SAMPLE TAP
1/4" AIR SUPPLY INLET WITH GRAINGER 4ZM13 PRV AND GAGE
1/2" BACKWASH SUPPLY INLET
NATIONAL TECHNICAL SERVICES INC.
KOTZEBUE, ALASKA
FLOC/SETT PILOT PLANT
GENERAL ARRANGEMENT

of the clarifier. After about one minute, when the media is totally fluidized, the influent water flow is restarted with the air also running. The influent water flushes solids upward and out to waste (see Figure 1). This step of the flush cycle is approximately 5 to 12 minutes at a 10 gpm/sq. ft. influent water flow. Then the air and the water are both shut off and the bed is allowed to settle up for one minute. The air remains off but the water flush to waste is then restarted at 10 gpm/sq. ft. for another 3 to 6 minutes. Upon completion of the flush cycle, the flow from the clarifier is diverted from waste back to the mixed media filter.

The mixed media filter of the CAC plant for the winter study was backwashed for 8 minutes at a rate of 11 gpm/sq. ft. of filter surface area, when the water temperature was approximately 37°F. The mixed media filter of the CAC plant for the summer study was backwashed for 7 minutes at a rate of 15 gpm/sq. ft. of filter surface area, when the water temperature was approximately 60°F. The backwash rate is temperature dependent, and is selected to obtain a filter media bed expansion of 20 to 30 percent. Supplemental surface agitation is provided by agitating the filter with air only for two minutes just before the start of the filter backwash, and continues to run during the first 30 seconds of the filter backwash.

CONVENTIONAL PILOT PLANT WITH 60° PLATE SETTLER

The conventional pilot plant runs at a constant but adjustable flow rate. Flow control devices ensure constant flow throughout the run. For the winter study the clarifier flow rate was 0.65 gpm/sq. ft. and the filter flow rate was 2.50 gpm/sq. ft.. The conventional plant was not used during the summer study.

WINTER PILOT STUDY

INDIVIDUAL RUN SUMMARY - CONTACT ADSORPTION CLARIFICATION PLANT

RUN #1T (CAC Plant)

The clarifier rate was 5.0 gpm/sq. ft. and the filter rate was 2.5 gpm/sq. ft..

Alum and Technical Products EC-473 cationic polymer were used as the coagulants. Alum was fed at 24 mg/l for the first hour, then was fed at 30 mg/l for two hours, then was fed at 32 mg/l for one hour, and finally was fed at 38 mg/l for the remainder of the run. Technical Products EC-473 was fed at 5.6 mg/l for the first four hours, then was fed at 6.8 mg/l for one hour, and finally was fed at 6.1 mg/l for the remainder of the run.

The average raw water qualities were: turbidity 1.06 N.T.U., true color 43 C.U., pH 7.27, alkalinity 45 mg/l, soluble iron 0.43 mg/l, soluble manganese 0.10 mg/l, and a temperature of 3.1°C. The clarifier influent turbidity was 21.6 N.T.U..

The average effluent qualities were: clarifier turbidity 1.13 N.T.U., filter turbidity 0.06 N.T.U., filter true color less than 5 C.U., pH 6.90, alkalinity 22 mg/l, soluble iron 0.29 mg/l, soluble manganese 0.10 mg/l, and soluble aluminum 0.02 mg/l. Without any potassium permanganate or other oxidizer fed, iron removal was poor and manganese removal virtually non-existent.

The average raw water qualities were: turbidity 1.15 N.T.U., true color 43 C.U., pH 7.30, alkalinity 44 mg/l, soluble iron 0.44 mg/l, soluble manganese 0.10 mg/l, and a temperature of 3.2°C. The clarifier influent turbidity was 21.8 N.T.U..

The average effluent qualities were: clarifier turbidity 0.63 N.T.U., filter turbidity 0.07 N.T.U., filter true color less than 5 C.U., pH 6.88, alkalinity 30 mg/l, soluble iron less than 0.01 mg/l, soluble manganese less than 0.03 mg/l, and soluble aluminum 0.02 mg/l.

The average clarifier run length was 5 hours to a differential pressure of 3.33 ft of water. The clarifier removed 97.4 percent of the turbidity.

The actual filter run length was 10 hours to a differential pressure of 1.12 ft. of water. The extrapolated filter run length is 73 hours to a differential pressure of 8.00 ft. of water. The filter removed 2.6 percent of the turbidity. The produced water efficiency, based on a maximum allowing for five minutes of filter to waste, is 95.0 percent, based on a maximum filter run length of 72 hours. It is the position of Purification Technology, Inc.; that a filter should be backwashed after 72 hours of run time in any event.

Run 2T obtained good iron and manganese removal, once potassium permanganate was fed. All of the finish water qualities are acceptable.

removed 3.6 percent of the turbidity. The produced water efficiency, allowing for five minutes of filter to waste, is 94.6 percent.

Run 3T was done to optimize the treatment scheme for the production of finish water of acceptable quality.

RUN #4T (CAC Plant)

The clarifier rate was 5.0 gpm/sq. ft. and the filter rate was 2.5 gpm/sq. ft..

Alum and Technical Products EC-473 cationic polymer were used as the coagulants. Alum was fed at 43 mg/l throughout the run. EC-473 was fed at 7.1 mg/l for the first four hours, then fed at 6.6 mg/l for the next hour, and finally fed at 6.8 mg/l for the remainder of the run. Potassium permanganate, used to oxidize iron and manganese; was fed at 2.2 mg/l throughout the run. CMI-633 non-ionic polymer, used to strengthen the floc; , was fed at 0.15 mg/l for the first seventeen hours, then fed at 0.17 mg/l for the next fourteen hours, and finally fed at 0.19 mg/l for the remainder of the run.

The average raw water qualities were: turbidity 1.26 N.T.U., true color 43 C.U., pH 7.29, alkalinity 45 mg/l, soluble iron 0.41 mg/l, soluble manganese 0.10 mg/l, and a temperature of 3.0°C. The clarifier influent turbidity was 21.8 N.T.U..

the run. Potassium permanganate, used to oxidize iron and manganese; was fed at 3.07 mg/l throughout the run. CMI-633 non-ionic polymer, used to strengthen the floc; was fed at 0.307 mg/l throughout the run.

The average raw water qualities were: turbidity 1.13 N.T.U., true color 43 C.U., pH 7.28, alkalinity 43 mg/l, soluble iron 0.43 mg/l, soluble manganese 0.10 mg/l, and a temperature of 3.1°C. The clarifier influent turbidity was 2.95 N.T.U..

The average effluent qualities were: clarifier turbidity 0.92 N.T.U., filter turbidity 0.06 N.T.U., filter true color less than 5 C.U., pH 6.84, alkalinity 22 mg/l, soluble iron 0.29 mg/l, soluble manganese 0.10 mg/l, and soluble aluminum 0.02 mg/l.

The clarifier removed 70.3 percent of the turbidity and the filter removed 29.7 percent of the turbidity. The actual filter run length was 7.0 hours to a differential pressure of 1.43 ft. of water. The extrapolated filter run length is 42 hours to a differential pressure of 8.00 ft. of water. The produced water efficiency, allowing for five minutes of filter to waste, is 97.2 percent.

Run 1C had potassium permanganate fed, however, much of the floc floated out of the clarifier and onto the filter. This floc carried iron and manganese with it, as well as causing short filter runs and other operating problems. For these reasons, no further testing of the conventional plant was conducted after Run 1C.

CONCLUSIONS FOR THE WINTER STUDY

Several short runs were conducted on the conventional pilot plant prior to Run 1C. It was found to be impossible to prevent the floc from floating up through the 60° plate settler and onto the mixed media filter. Due to the problem of floating floc, testing of the 60° plate settler was ended after Run 1C.

The upflow contact adsorption clarification (CAC) and mixed media downflow filtration system performed well during both studies (See Table 1 on Page 4 for specifications). When properly optimized, the average clarifier run time was about 5 hours and the average clarifier removal was 96.5 percent of the turbidity. When properly optimized, the extrapolated filter run time was about 58 hours for these runs, the average filter removal was 3.5 percent of the turbidity for these runs, and the average produced water efficiency was 94.8 percent for these runs.

The finish water qualities from the CAC system met or exceeded the U. S. EPA drinking water requirements.

The average effluent qualities were: clarifier turbidity 0.226 N.T.U., filter turbidity 0.059 N.T.U., filter true color less than 5 C.U., pH 6.81, alkalinity 23.4 mg/l, manganese less than 0.03 mg/l, iron 0.02 mg/l, and soluble aluminum 0.02 mg/l.

The average clarifier run length was 6 hours to a differential pressure of 4.00 ft of water. The clarifier removed 93.6 percent of the turbidity.

The actual filter run length was 23 hours to a differential pressure of 0.90 ft. of water. The extrapolated filter run length is 219 hours to a differential pressure of 8.00 ft. of water. The filter removed 95.3 percent of the turbidity. The produced water efficiency, based on a maximum allowing for five minutes of filter to waste, is 95.1 percent, based on a maximum filter run length of 72 hours. It is the position of Purification Technology, Inc.; that a filter should be backwashed after 72 hours of run time in any event.

Run 1T tested the use of soda ash for pH adjustment and powdered activated carbon to mitigate a taste and odor problem that occurs during the summer months. Finish water of acceptable quality was obtained.

RUN #2T (CAC Plant)

The clarifier rate was 5.0 gpm/sq. ft. and the filter rate was 2.5 gpm/sq. ft..

The actual filter run length was 17 hours to a differential pressure of 0.86 ft. of water. The extrapolated filter run length is 314 hours to a differential pressure of 8.00 ft. of water. The filter removed 4.7 percent of the turbidity. The produced water efficiency, based on a maximum allowing for five minutes of filter to waste, is 95.3 percent, based on a maximum filter run length of 72 hours. It is the position of Purification Technology, Inc.; that a filter should be backwashed after 72 hours of run time in any event.

Run 2T was done to optimize the treatment scheme of Run 1T for the production of finish water of the best possible quality during the summer months.

DISCUSSION OF RESULTS – SUMMER STUDY

SUMMARY OF THE SUMMER STUDY

The raw water for this study was drawn from Devil's Lake, at the existing Kotzebue, AK treatment plant. Jar and bench testing of the water from Vortac Lake showed that the treatment scheme was the same as for water from Devil's Lake.

The raw water had turbidity ranging from 2.58 N.T.U. to 3.86 N.T.U.. The raw water had a true color of 33 C.U., pH ranging from 6.96 to 7.37, and alkalinity ranging from 26.5 to 36.0 mg/l. The raw water had iron ranging from 0.51 mg/l to 1.70 mg/l, manganese 0.08 mg/l to 0.13 mg/l, and a temperature range from 14.7°C to 17.7°C.

position of Purification Technology, Inc.; that a filter should be backwashed after 72 hours of run time in any event.

The finish water qualities from the CAC system met or exceeded the U. S. EPA drinking water requirements.

4.) The new plant should utilize Leopold-type cap block underdrains in connection with air-water backwash. The cap block underdrains allow the use of the more efficient air wash rather than a surface wash, and eliminates the gravel underdrain system.

5.) The new plant should be sized so that the contact adsorption clarifier operates at 5 gpm/sq. ft. of light media surface area. The clarifier should be designed to flush the light media at 10 gpm/sq. ft. of surface area.

The new plant should be sized so that the mixed media filter operates at 2.5 gpm/sq. ft. of surface area and to backwash at 10-20 gpm/sq. ft. of surface area.

6.) Purification Technology Inc., believes that four (4) upflow contact adsorption clarification-downflow mixed media filter units should be installed. Each unit should provide thirty-three percent (33%) of the maximum required daily flow rate. This arrangement allows for more flexibility in flow control and maintenance.

7.) All chemical feed units should be set up in duplicate.

8.) All chemical feed systems should be capable of being varied automatically in response to the incoming raw water flow.

PILOT STUDY LOG - AVERAGE VALUES OF THE CAC PLANT - WINTER STUDY

SITE Kotzebue, AK
SEASON Winter
EQUIP Contact Adsorption Clarification (CAC)

DATES 11/26 to 12/04 2005

CLAR FLOW RATE gpm/sq ft 5.0
FILT FLOW RATE gpm/sq ft 2.5

CLARIFIER FLUSH CYCLE
Air Only, min 1
Air & H20, min 6
H20 Wash, min 5

FILTER BACKWASH
Air Only, min 2
Water Only, min 8
GPM/sq ft 11

Run #	Run Time (Hr)	Extrap Run Time	Turbidity, NTU				Final Press. Ft. H20 diff.		TEMP RAW	pH		TRUE COLOR		MANGANESE		IRON		ALKALINITY		CLAR % Remov.	FILT % Remov.	Prod. Water % Eff
			Raw	Clar Inf	Clar Eff	Filt Eff	CLAR	FILT	deg C	RAW	EFF	RAW	EFF	RAW	EFF	RAW	EFF	RAW	EFF			
1T	11	76	1.06	21.6	1.13	0.06	4.00	1.33	3.1	7.27	6.90	43	<5	0.10	0.10	0.43	0.29	45	22	95.0	5.0	95.0
2T	10	73	1.15	21.8	0.63	0.07	3.33	1.12	3.2	7.30	6.88	43	<5	0.10	<0.03	0.44	<0.01	44	30	97.4	2.6	95.0
3T	24	54	1.11	18.7	0.75	0.07	3.92	1.96	3.0	7.30	6.85	43	<5	0.10	<0.03	0.42	<0.01	43	30	96.4	3.6	94.8
4T	47	58	1.26	21.8	0.82	0.06	4.00	3.56	3.0	7.29	6.90	43	<5	0.10	<0.03	0.41	<0.01	45	31	96.5	3.5	94.8

PILOT STUDY LOG - AVERAGE VALUES OF THE CONVENTIONAL PLANT - WINTER STUDY

SITE Kotzebue, AK
SEASON Winter
EQUIP Conventional w/60 Degree Plate Settler

DATES 11/26 to 12/04 2005

CLAR FLOW RATE gpm/sq ft 0.65
FILT FLOW RATE gpm/sq ft 2.50

FILTER BACKWASH
Air Only, min 2
Water Only, min 8
GPM/sq ft 11

Run #	Run Time (Hr)	Extrap Run Time	Turbidity, NTU				Final Press. Ft. H20 diff.		TEMP RAW	pH		TRUE COLOR		MANGANESE		IRON		ALKALINITY		CLAR % Remov.	FILT % Remov.	Prod. Water % Eff
			Raw	Clar Inf	Clar Eff	Filt Eff	CLAR	FILT	deg C	RAW	EFF	RAW	EFF	RAW	EFF	RAW	EFF	RAW	EFF			
1C	7.0	42	1.13	2.94	0.92	0.06		1.43	3.1	7.28	6.84	43	<5	0.10	0.10	0.43	0.29	43	22	70.3	29.7	97.2

Run 1T - Kotzebue, AK

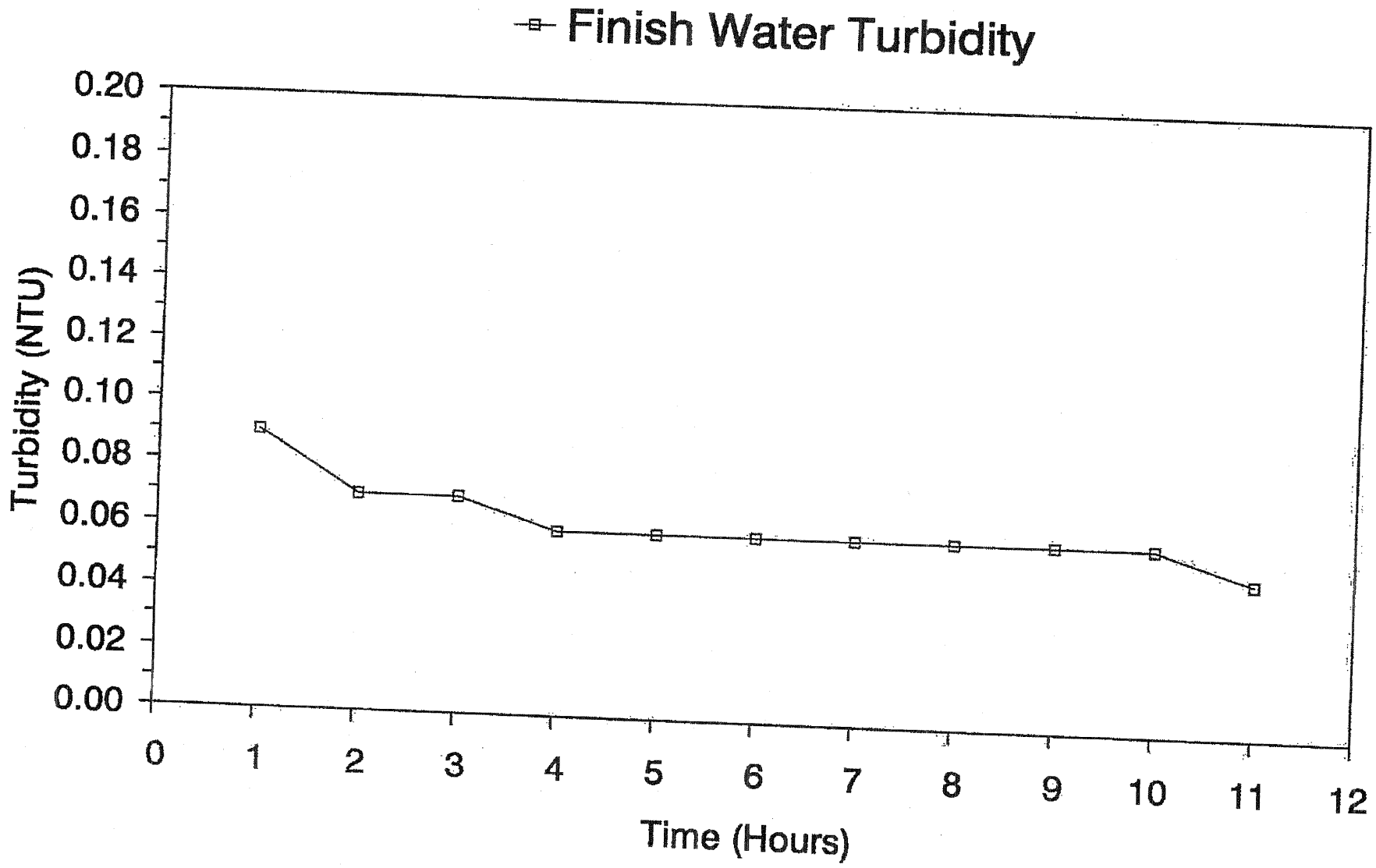

Run 1T - Kotzebue, AK

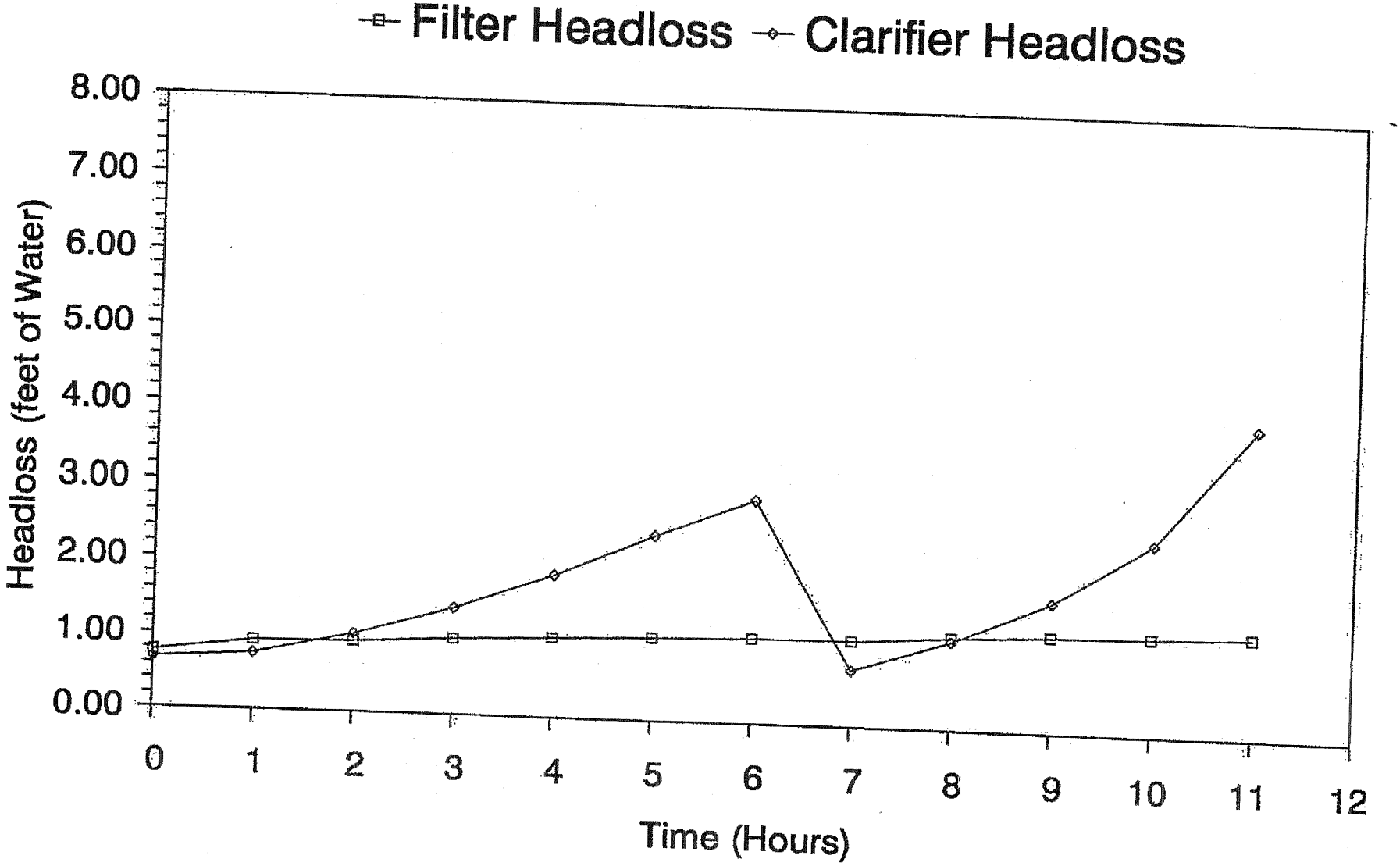

PILOT STUDY LOG - WINTER STUDY - CAC PL

SITE Kotzebue, AK
SEASON Winter
EQUIP Contact Adsorption Clarification (CAC)

RUN 2T
DATES 11/27 to 11/28 2005

CLAR FLOW RATE gpm/sq ft 5.0
FILT FLOW RATE gpm/sq ft 2.5

CLARIFIER FLUSH CYCLE
Air Only, min 1
Air & H20, min 5
H20 Wash, min 6
Hours Btwn Flushes 5

FILTER BACKWASH
Air Only, min 2
Water Only, min 8
GPM/sq ft 11
TOTAL RUN TIME, hr 10

This is Page 1 of 1 for Run 2T

Time	Elap Time (Hr)	Turbidity, NTU Raw	Clar Inf	Clar Eff	Filt Eff	CLAR PRESS ft H20	FILT PRESS ft H20	TEMP RAW deg C	pH RAW	pH EFF	TRUE COLOR RAW	TRUE COLOR EFF	MANGANESE RAW	MANGANESE EFF	IRON RAW	IRON EFF	ALKALINITY RAW	ALKALINITY EFF	CHEM DOSE mg/l Alum	EC-473	CMI-633	KMnO4	NOTES
2100	0			1.70	0.15	0.75	0.73												38	7.0	0.17	2.2	
2200	1	1.24	21.8	0.33	0.08	1.08	0.94	3.2	7.31	6.89	43	<5	0.10	<0.03	0.46	<0.01	43	29	38	7.0	0.17	2.2	
2300	2	1.22	21.5	0.45	0.05	1.46	0.94	3.2	7.27	6.87									38	7.0	0.17	2.2	
0000	3	1.26	21.1	0.46	0.06	2.08	0.97	3.2	7.31	6.86	43	<5							38	7.0	0.17	2.2	
0100	4	1.19	21.6	0.56	0.05	3.17	0.99	3.2	7.28	6.84									38	7.0	0.17	2.2	
0200	5	1.13	21.9	0.60	0.06	3.75	0.99	3.2	7.32	6.91	42	<5	0.10	<0.03	0.43	<0.01			38	7.0	0.17	2.2	
0300	6	1.10	22.7	0.85	0.05	0.71	1.03	3.1	7.29	6.90									38	7.0	0.22	2.2	Clarifier Flush 1940
0400	7	1.07	22.2	0.57	0.06	1.13	1.03	3.1	7.26	6.87	43	<5							38	7.0	0.22	2.2	
0500	8	1.08	21.8	0.50	0.06	1.75	1.08	3.1	7.31	6.89									38	7.0	0.22	2.2	
0600	9	1.11	22.1	0.48	0.06	2.50	1.10	3.1	7.29	6.85	44	<5	0.10	<0.03	0.44	<0.01	45	31	38	7.0	0.22	2.2	
0700	10	1.09	21.5	0.46	0.06	3.33	1.12	3.1	7.33	6.88									38	7.0	0.22	2.2	
Average		1.15	21.8	0.63	0.07			3.2	7.30	6.88	43	<5	0.10	<0.03	0.44	<0.01	44	30	38	7.0	0.19	2.2	

Run 2T - Kotzebue, AK

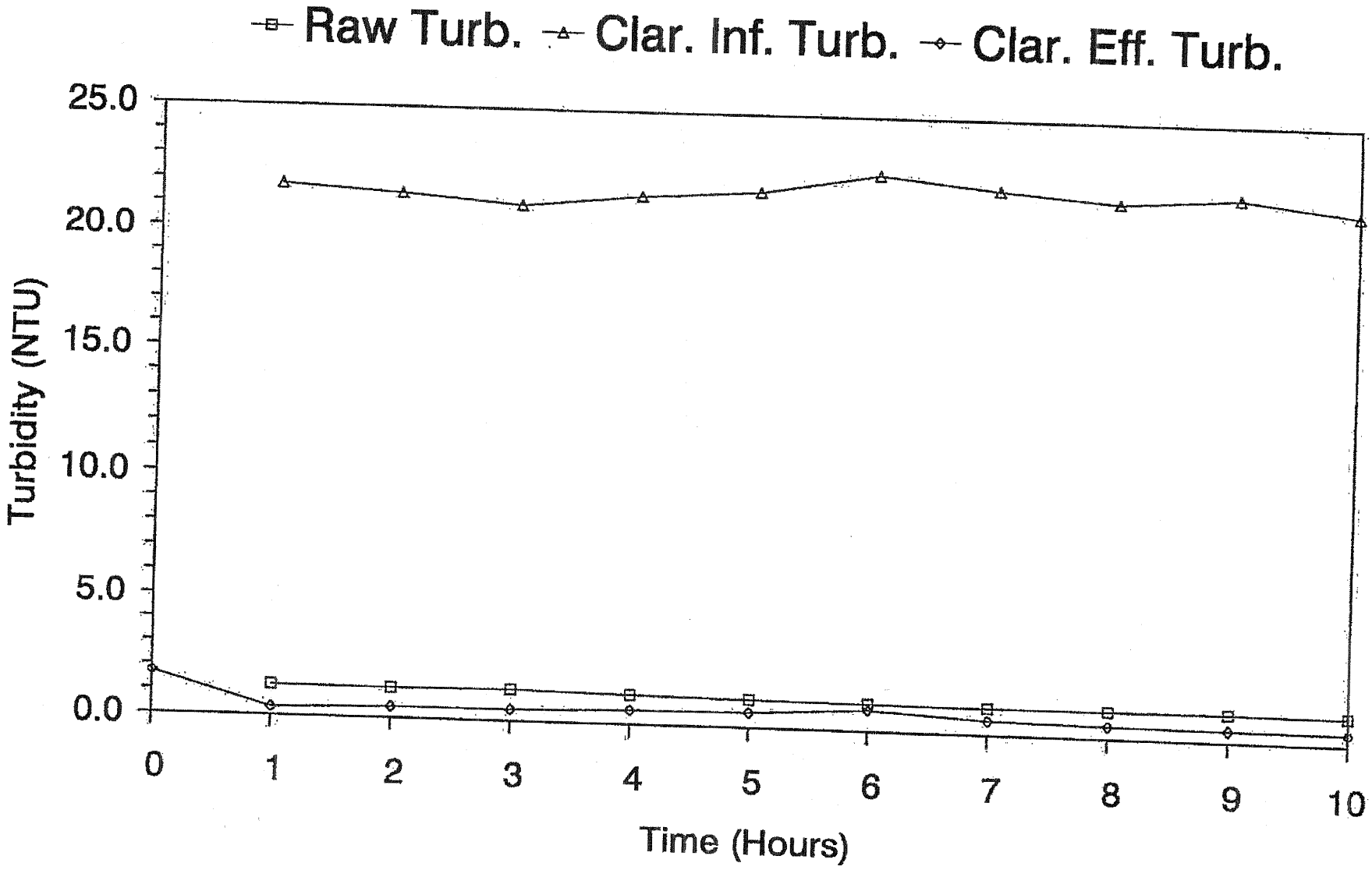

Run 2T - Kotzebue, AK

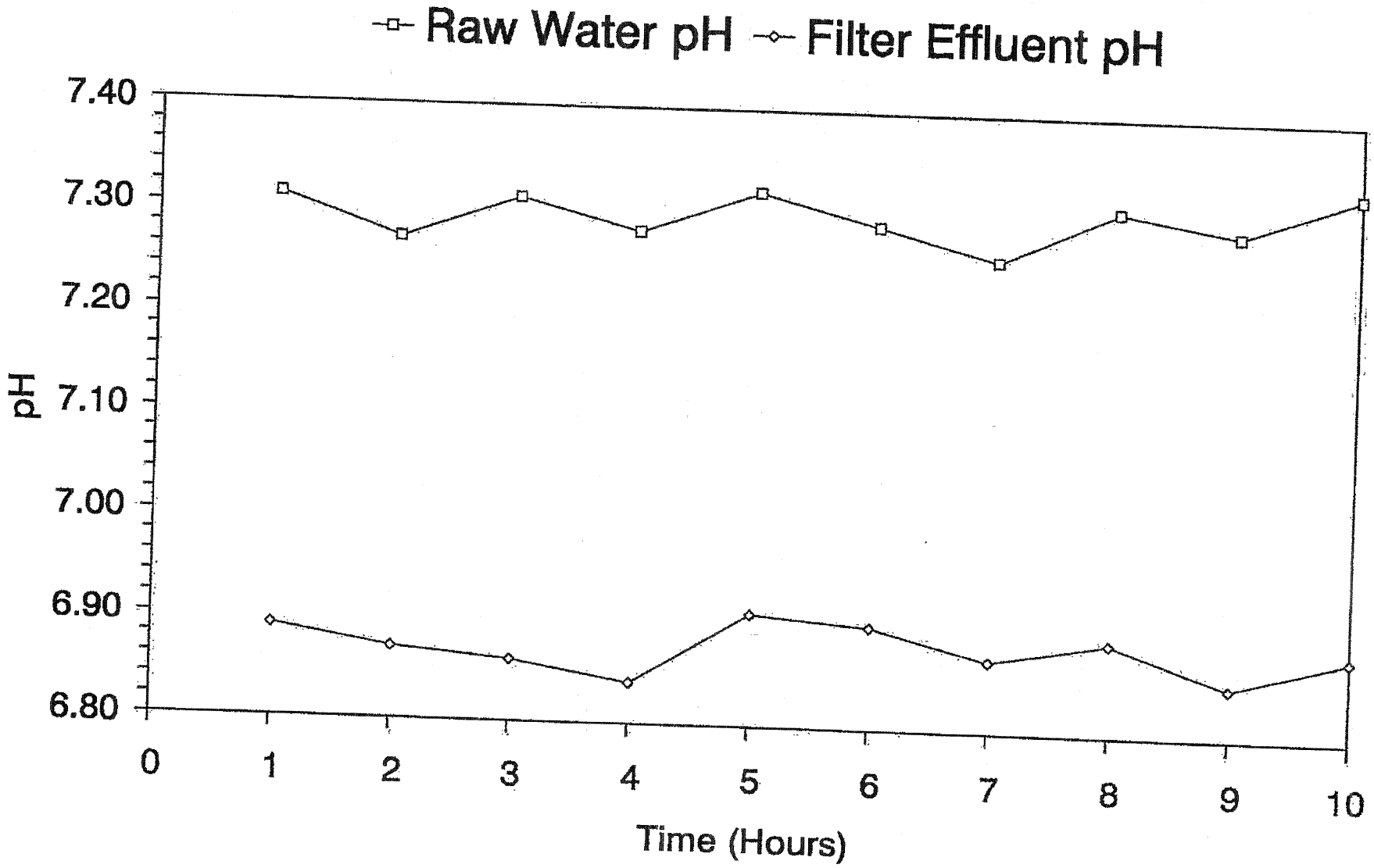

Run 3T - Kotzebue, AK

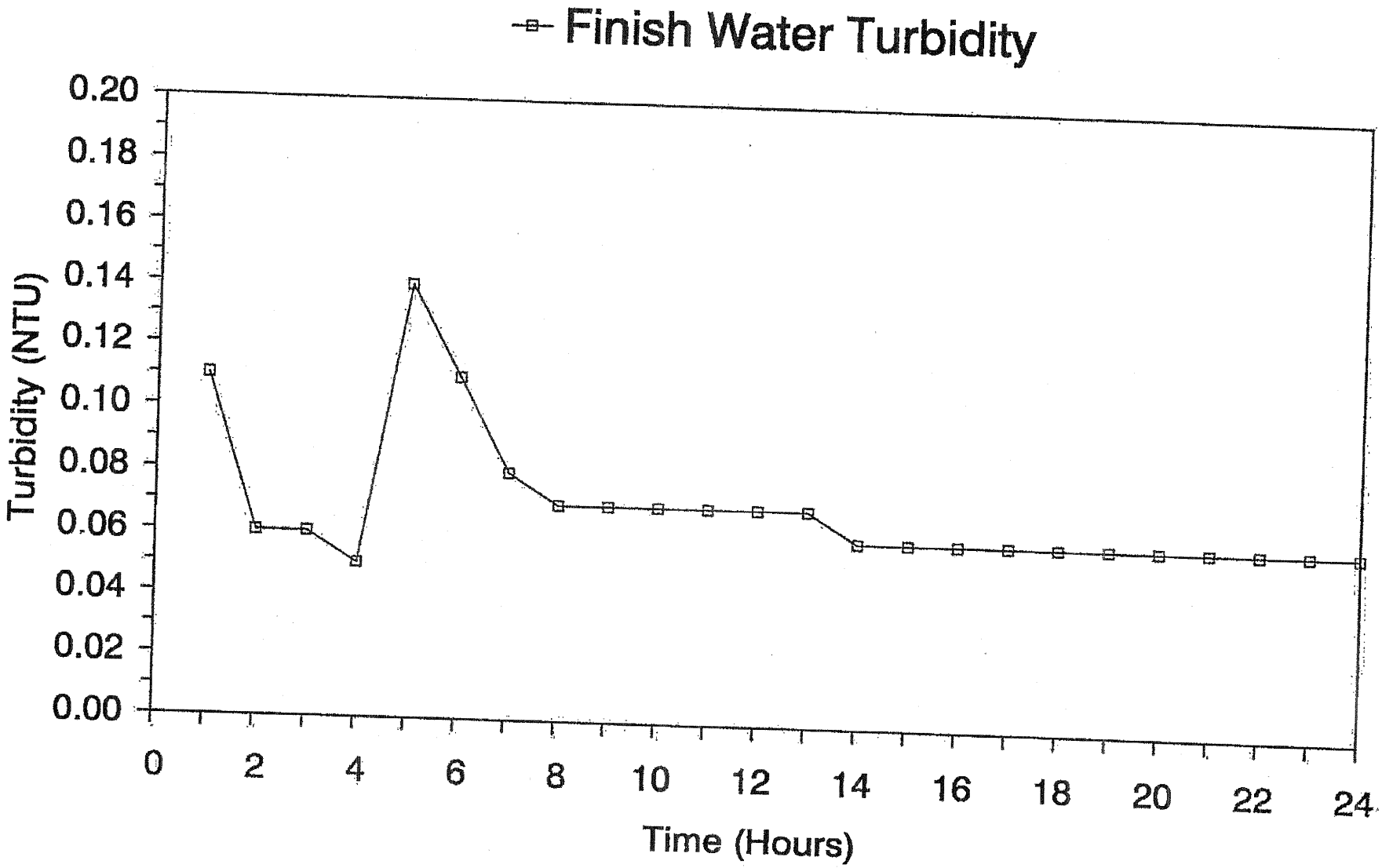

Run 3T - Kotzebue, AK

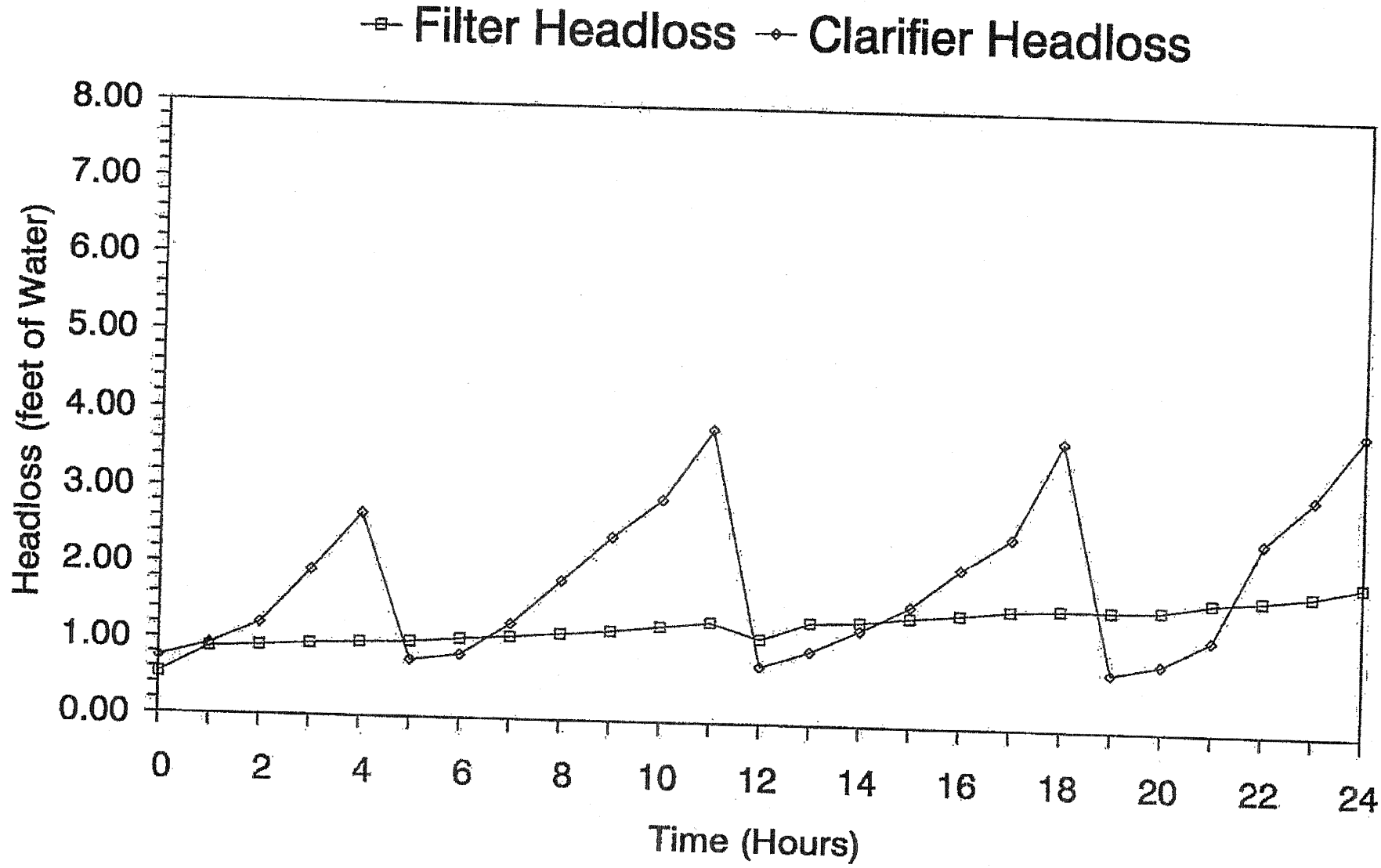

PILOT STUDY LOG - WINTER STUDY - CAC PLANT

SITE Kotzebue, AK
SEASON Winter
EQUIP Contact Adsorption Clarification (CAC)

RUN 4T
DATES 12/3 to 12/4 2005

CLAR FLOW RATE gpm/sq ft 5.0
FILT FLOW RATE gpm/sq ft 2.5

CLARIFIER FLUSH CYCLE
Air Only, min 1
Air & H2O, min 5
H2O Wash, min 6
Hours Btwn Flushes 5

FILTER BACKWASH
Air Only, min 2
Water Only, min 8
GPM/sq ft 11
TOTAL RUN TIME, hr 47

This is Page 1 of 2 for Run 4T

Time	Elap Time (Hr)	Turbidity, NTU Raw	Clar Inf	Clar Eff	Filt Eff	CLAR PRESS ft H2O	FILT PRESS ft H2O	TEMP RAW deg C	pH RAW	pH EFF	TRUE COLOR RAW	TRUE COLOR EFF	MANGANESE RAW	MANGANESE EFF	IRON RAW	IRON EFF	ALKALINITY RAW	ALKALINITY EFF	CHEM DOSE mg/l Alum	EC-473	CMI-633	KMnO4	NOTES
0900	0		19.0			0.75	0.58	3.0											43	7.1	0.15	2.2	
1000	1	1.01	18.8	1.12	0.09	0.90	0.79	3.0	7.30	6.88	43	<5	0.10	<0.03	0.42	<0.01	48	34	43	7.1	0.15	2.2	
1100	2	1.02	20.0	0.93	0.08	1.21	0.92	3.0	7.32	6.89									43	7.1	0.15	2.2	
1200	3	1.02	21.4	0.88	0.08	1.92	0.97	3.0	7.34	6.90	42	<5	0.10	<0.03	0.42	<0.01			43	7.1	0.15	2.2	
1300	4	1.03	21.5	0.80	0.07	2.67	1.08	3.0	7.31	6.88									43	7.1	0.15	2.2	
1400	5	1.03	21.7	0.95	0.07	3.25	1.10	3.0	7.29	6.86	43	<5	0.10	<0.03	0.40	<0.01			43	6.6	0.15	2.2	
1500	6	1.05	22.0	1.09	0.07	4.00	1.12	3.0	7.27	6.86									43	6.8	0.15	2.2	Clarifier Flush 1505
1600	7	1.04	22.2	1.36	0.07	0.75	1.13	3.0	7.25	6.88	43	<5	0.10	<0.03	0.41	<0.01			43	6.8	0.15	2.2	
1700	8	1.05	22.1	0.98	0.07	1.08	1.18	3.0	7.31	6.89									43	6.8	0.15	2.2	
1800	9	1.05	21.7	0.88	0.07	1.60	1.22	3.0	7.35	6.90	43	<5	0.10	<0.03	0.42	<0.01	44	30	43	6.8	0.15	2.2	
1900	10	1.03	21.1	0.75	0.07	2.25	1.27	3.0	7.33	6.92									43	6.8	0.15	2.2	
2000	11	1.06	21.3	0.87	0.07	3.00	1.32	3.0	7.31	6.91	45	<5	0.10	<0.03	0.39	<0.01			43	6.8	0.15	2.2	
2100	12	1.09	21.7	0.99	0.07	3.67	1.36	3.0	7.29	6.92									43	6.8	0.15	2.2	Clarifier Flush 2115
2200	13	1.04	21.4	1.05	0.08	0.67	1.43	3.0	7.29	6.93	43	<5	0.10	<0.03	0.40	<0.01			43	6.8	0.15	2.2	
2300	14	1.05	21.6	0.70	0.07	1.25	1.48	3.0	7.30	6.95									43	6.8	0.15	2.2	
0000	15	1.09	21.2	0.54	0.07	2.08	1.52	3.0	7.33	6.95	43	<5	0.10	<0.03	0.42	<0.01			43	6.8	0.15	2.2	
0100	16	1.08	22.1	0.40	0.07	2.50	1.56	3.0	7.28	6.91									43	6.8	0.15	2.2	
0200	17	1.13	21.9	0.56	0.06	3.50	1.61	3.0	7.21	6.89	44	<5	0.10	<0.03	0.41	<0.01	45	31	43	6.8	0.15	2.2	Clarifier Flush 0230
0300	18	1.09	22.3	0.90	0.08	0.67	1.61	3.0	7.22	6.88									43	6.8	0.17	2.2	
0400	19	1.10	21.7	0.85	0.07	0.83	1.66	2.9	7.23	6.87	43	<5	0.10	<0.03	0.41	<0.01			43	6.8	0.17	2.2	
0500	20	1.11	20.8	0.65	0.06	1.33	1.77	2.9	7.22	6.89									43	6.8	0.17	2.2	
0600	21	1.11	21.1	0.60	0.06	1.91	1.89	2.9	7.21	6.90	43	<5	0.10	<0.03	0.42	<0.01			43	6.8	0.17	2.2	
0700	22	1.12	20.9	0.61	0.06	2.45	1.92	2.9	7.24	6.91									43	6.8	0.17	2.2	
0800	23	1.08	21.3	0.67	0.06	3.17	1.99	2.9	7.29	6.92	43	<5	0.10	<0.03	0.39	<0.01			43	6.8	0.17	2.2	
0900	24	1.09	21.7	0.72	0.06	3.83	2.01	2.9	7.28	6.90									43	6.8	0.17	2.2	Clarifier Flush 0915

Run 4T - Kotzebue, AK

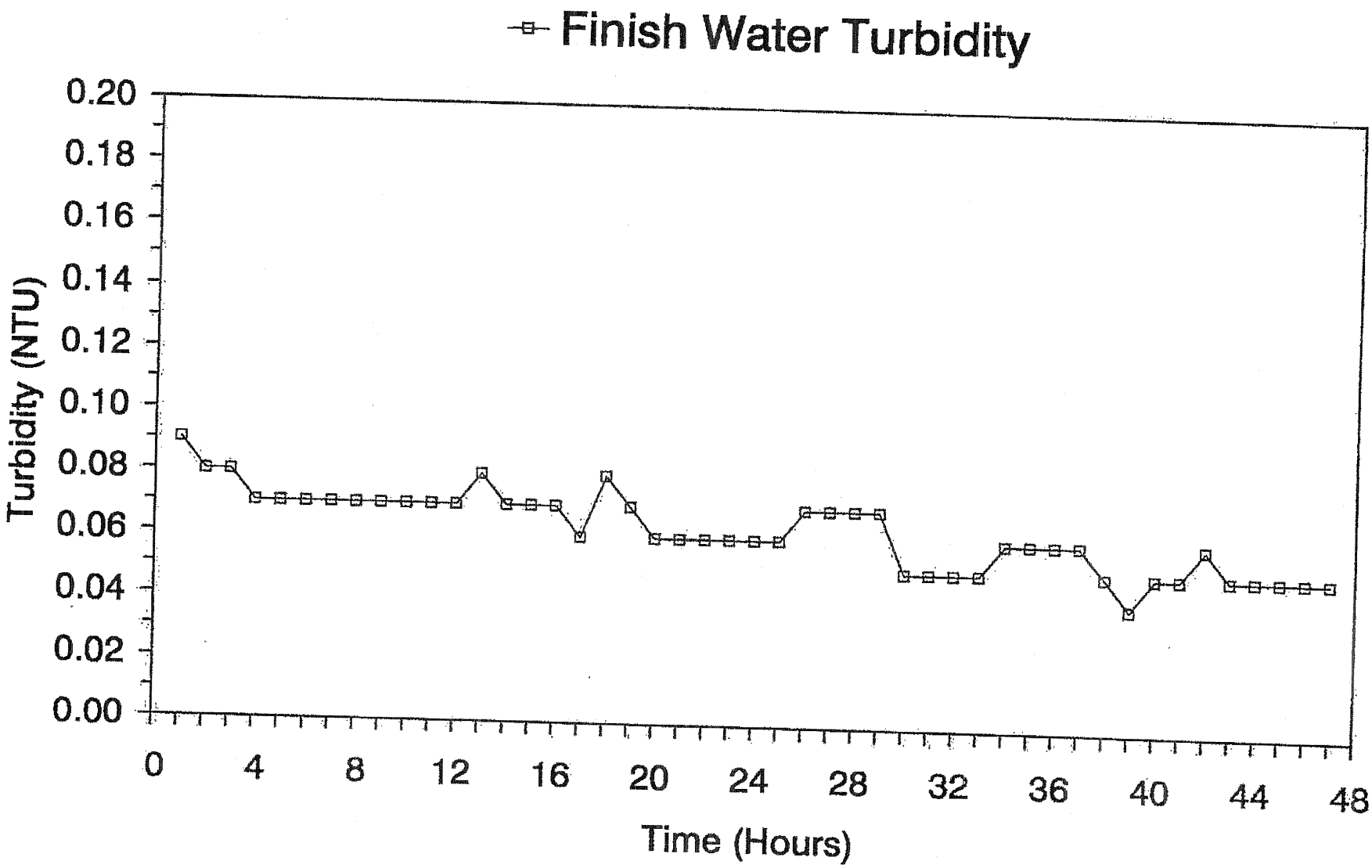

Run 4T - Kotzebue, AK

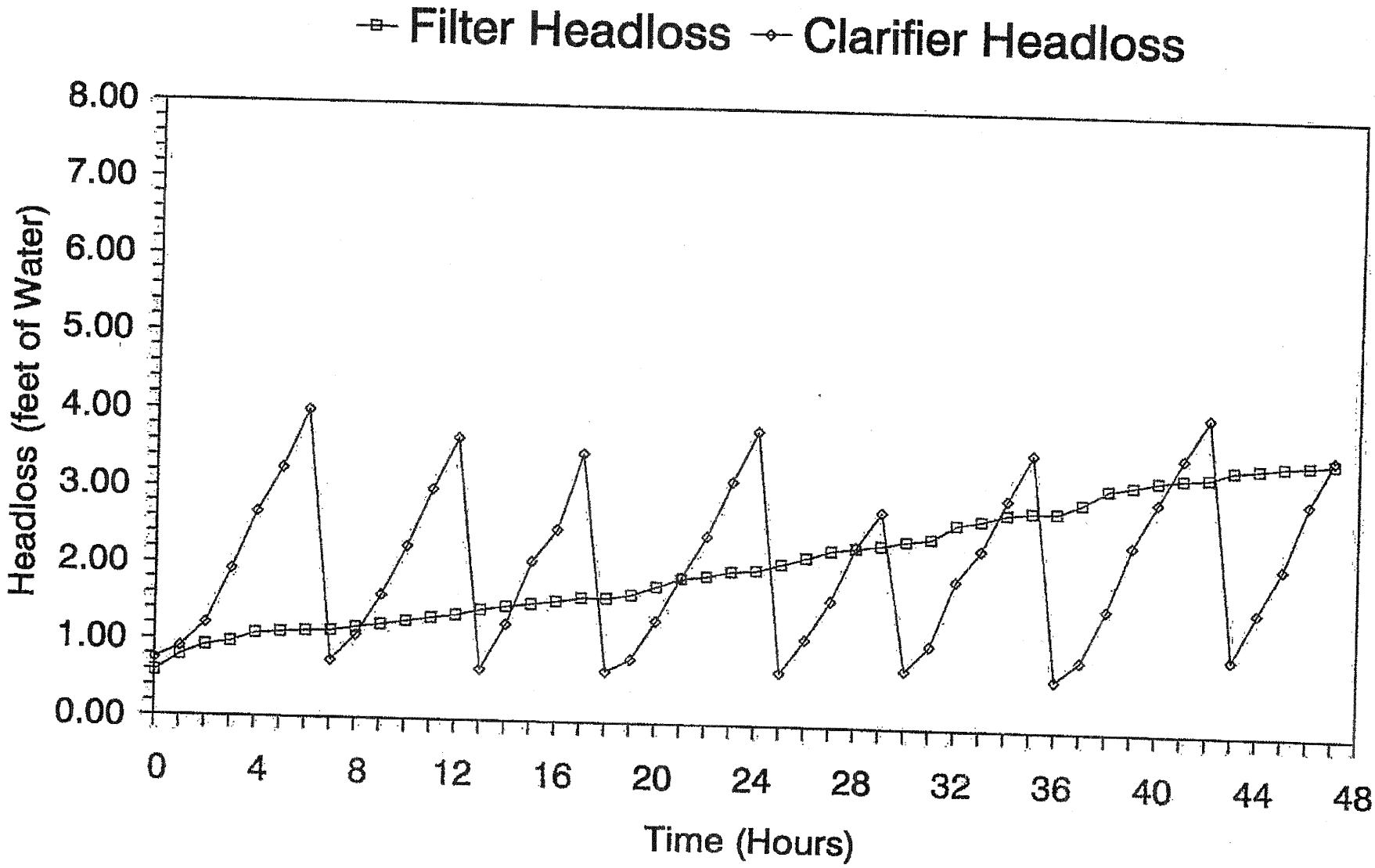

PILOT STUDY LOG - WINTER STUDY - CONVE.. ..NAL PLANT

SITE Kotzebue, AK
SEASON Winter
EQUIP Conventional w/60 Degree Plate Settler

RUN 1C
DATE 11/27 2005

CLAR FLOW RATE gpm/sq ft 0.65
FILT FLOW RATE gpm/sq ft 2.50

FILTER BACKWASH
Air Only, min 2
Water, min 8
GPM/sq ft 11
TOTAL RUN TIME, hr 7.0

This is Page 1 of 1 for Run 1C

Time	Elap Time (Hr)	Turbidity, NTU Raw	Clar Inf	Clar Eff	Filt Eff		FILT PRESS ft H20	TEMP RAW deg C	pH RAW	pH EFF	TRUE COLOR RAW	TRUE COLOR EFF	MANGANESE RAW	MANGANESE EFF	IRON RAW	IRON EFF	ALKALINITY RAW	ALKALINITY EFF	CHEM DOSE mg/l Alum	EC-473	CMI-633	KMnO4	NOTES
1100	0.0	1.04					0.76	3.1	7.28	6.84									46	9.0	0.307	3.07	
1130	0.5	1.06	2.95	2.90	0.09		0.92	3.1	7.27	6.85									46	9.0	0.307	3.07	
1200	1.0	1.08	2.92	2.40	0.07		0.94	3.1	7.29	6.86	43	<5	0.10	0.10	0.42	0.28	44	23	46	9.0	0.307	3.07	
1230	1.5	1.10	2.96	1.70	0.07		1.01	3.1	7.26	6.84									46	9.0	0.307	3.07	
1300	2.0	1.09	2.91	1.20	0.06		1.06	3.1	7.28	6.85									46	9.0	0.307	3.07	
1330	2.5	1.13	2.89	0.77	0.06		1.10	3.1	7.30	6.87									46	9.0	0.307	3.07	
1400	3.0	1.14	2.90	0.38	0.06		1.13	3.1	7.27	6.88	43	<5	0.10	0.10	0.44	0.29	43	21	46	9.0	0.307	3.07	
1430	3.5	1.11	2.87	0.47	0.06		1.14	3.1	7.29	6.84									46	9.0	0.307	3.07	
1500	4.0	1.12	2.92	0.63	0.06		1.22	3.2	7.26	6.83									46	9.0	0.307	3.07	
1530	4.5	1.14	2.93	0.55	0.06		1.27	3.2	7.26	6.82									46	9.0	0.307	3.07	
1600	5.0	1.16	2.98	0.47	0.06		1.29	3.2	7.27	6.82	44	<5	0.10	0.10	0.41	0.27	42	20	46	9.0	0.307	3.07	
1630	5.5	1.14	2.94	0.31	0.05		1.33	3.2	7.29	6.81									46	9.0	0.307	3.07	
1700	6.0	1.17	2.96	0.35	0.05		1.36	3.2	7.28	6.83									46	9.0	0.307	3.07	
1730	6.5	1.19	2.99	0.36	0.05		1.39	3.2	7.31	6.84									46	9.0	0.307	3.07	
1800	7.0	1.21	3.00	0.33	0.05		1.43	3.2	7.30	6.85	43	<5	0.10	0.10	0.45	0.31	43	22	46	9.0	0.307	3.07	
Average		1.13	2.94	0.92	0.06			3.15	7.28	6.84	43	<5	0.10	0.10	0.43	0.29	43	22	46	9.0	0.307	3.07	

Run 1C - Kotzebue, AK

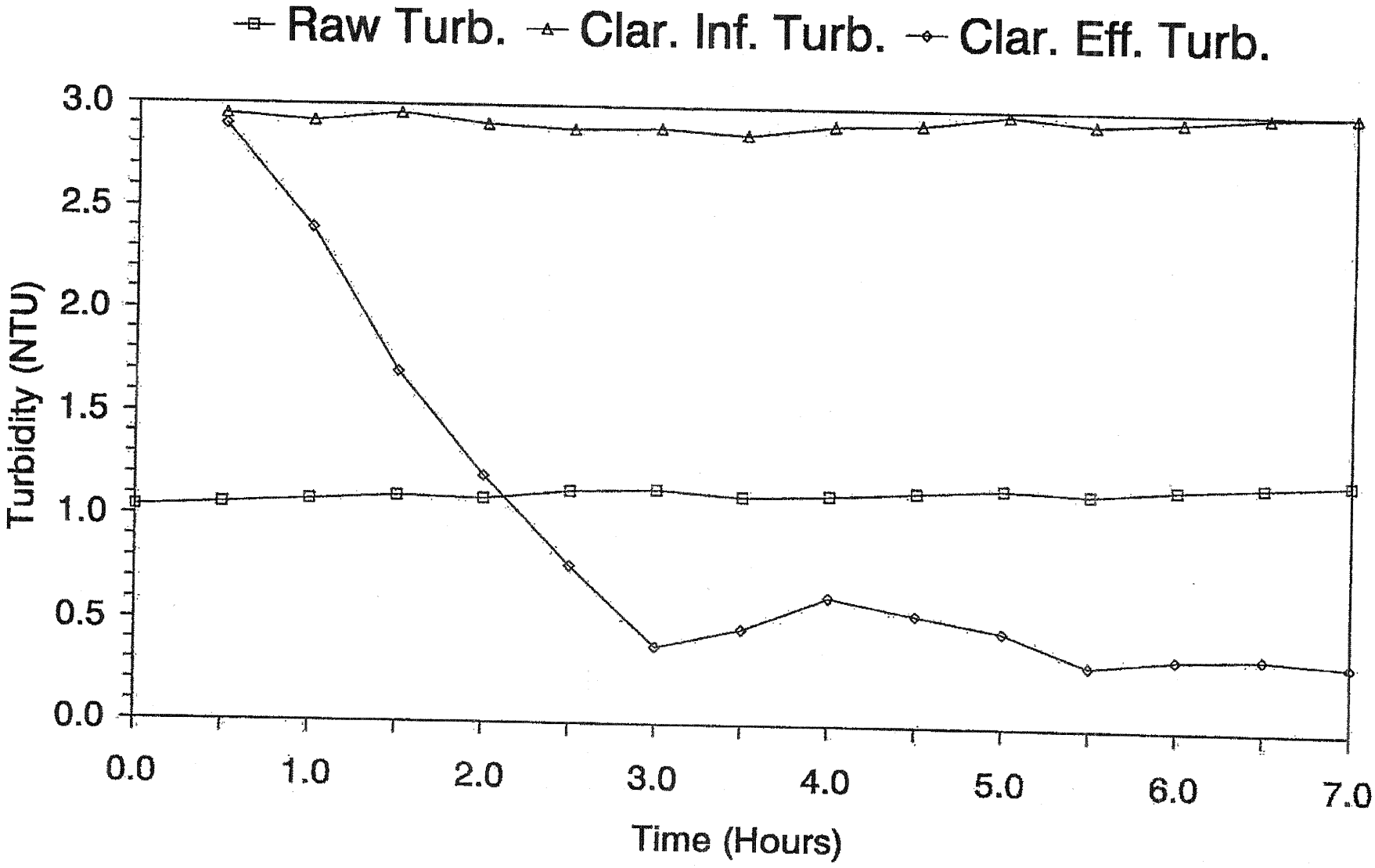

Run 1C - Kotzebue, AK

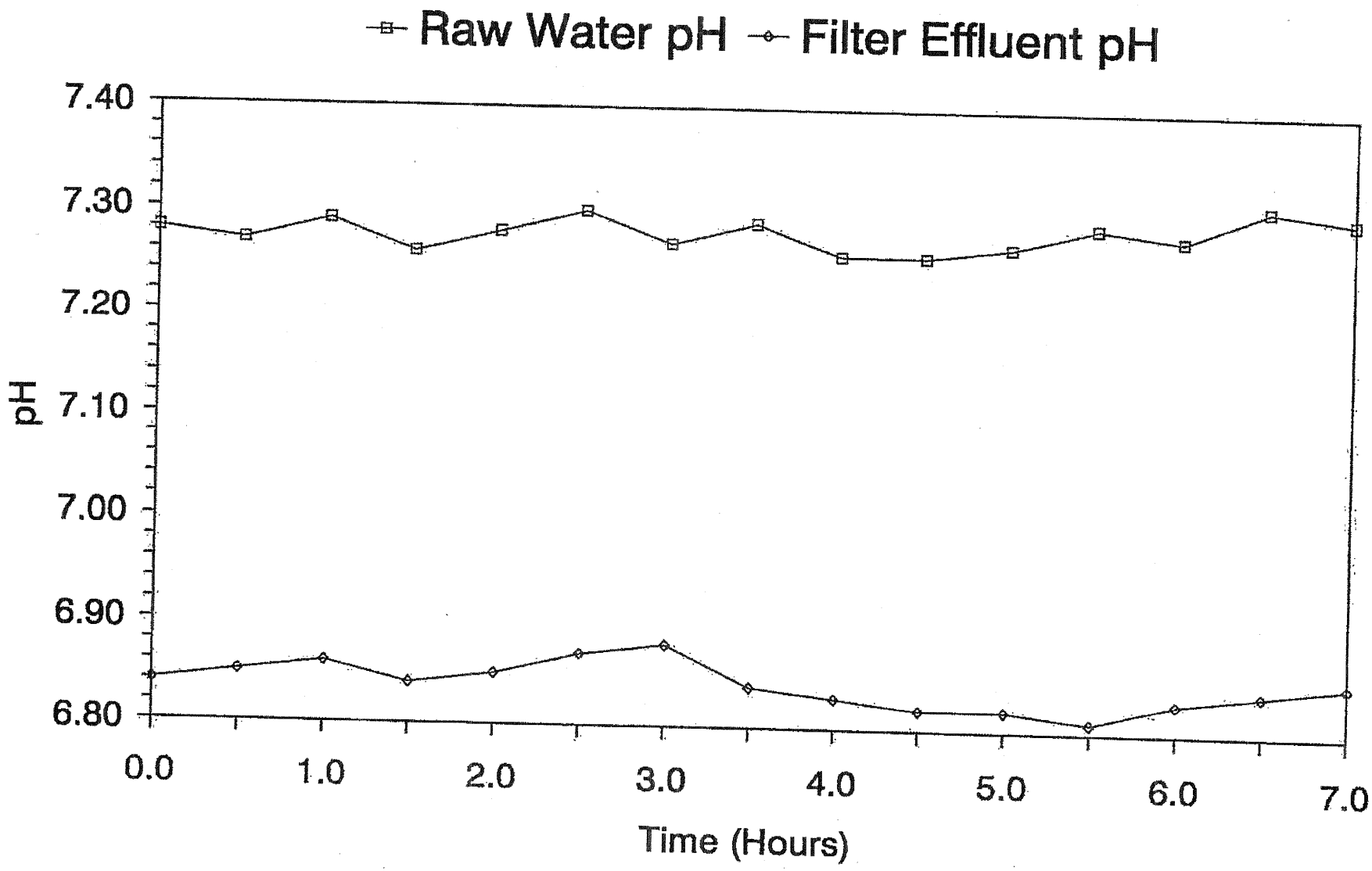

PILOT STUDY LOG - SUMMER STUDY

SITE Kotzebue, AK
SEASON Summer
EQUIP Contact Adsorption Clarification (CAC)

RUN 1T
DATES 7/20 to 7/21 2006

CLAR FLOW RATE gpm/sq ft 5.0
FILT FLOW RATE gpm/sq ft 2.5

CLARIFIER FLUSH CYCLE
Air Only, min 1
Air & H20, min 10
H20 Wash, min 4
Hours Btwn Flushes 6

FILTER BACKWASH
Air Only, min 2
Water Only, min 7
GPM/sq ft 15
TOTAL RUN TIME, hr 23

This is Page 1 of 1 for Run 1T

Time	Elap Time (Hr)	Turbidity, NTU Raw	Clar Inf	Clar Eff	Filt Eff	CLAR PRESS ft H20	FILT PRESS ft H20	TEMP RAW deg C	pH RAW	pH EFF	TRUE COLOR RAW	TRUE COLOR EFF	MANGANESE RAW	MANGANESE EFF	IRON RAW	IRON EFF	ALKALINITY RAW	ALKALINITY EFF	CHEM DOSE mg/l Alum	EC-473	Soda Ash	KMnO4	CMI-633	PAC	NOTES
0600	0					0.62	0.53												33	5.98	15.7	3.89	0.21	8.1	
0700	1	2.70	6.61	0.385	0.064	0.76	0.64	14.7	7.27	6.96	33	<5					34.0	23.0	33	5.98	15.7	3.89	0.21	8.1	
0800	2	2.67	6.64	0.305	0.058	1.11	0.67	14.8	7.22	6.81									33	5.98	15.7	3.89	0.21	8.1	
0900	3	2.65	6.71	0.254	0.075	1.53	0.69	14.7	7.18	6.83			0.13	<0.03	0.67	0.02			33	5.98	15.7	3.89	0.21	8.1	
1000	4	2.72	6.10	0.206	0.058	2.07	0.69	14.8	7.20	6.84	35	<5					34.5	24.2	33	5.98	15.7	3.89	0.21	8.1	
1100	5	2.66	6.35	0.173	0.057	2.87	0.71	14.6	7.17	6.80									33	5.98	15.7	3.89	0.21	8.1	
1200	6	2.70	6.57	0.160	0.058	3.70	0.73	14.8	7.19	6.74	33	<5							33	5.98	16.2	3.89	0.21	8.1	Clarifier Flush 1205
1300	7	2.68	6.31	0.468	0.057	0.65	0.65	14.8	7.21	6.85									33	6.48	16.2	3.15	0.21	8.1	
1400	8	2.64	6.26	0.287	0.070	1.12	0.67	14.7	7.18	6.81	34	<5							33	6.48	16.7	3.15	0.21	8.1	
1500	9	2.59	6.35	0.225	0.057	1.62	0.68	14.7	7.14	6.80			0.13	<0.03	1.06	0.02			33	6.48	16.7	3.15	0.21	8.1	
1600	10	2.61	6.32	0.208	0.054	2.45	0.69	14.8	7.15	6.79									33	6.48	16.7	3.15	0.21	8.1	
1700	11	2.67	6.27	0.176	0.064	3.25	0.69	14.8	7.17	6.77	31	<5	0.10	<0.03	1.24	0.02	34.5	23.9	33	6.48	16.7	3.15	0.21	8.1	
1800	12	2.62	7.00	0.165	0.067	4.00	0.69	14.8	7.13	6.79									33	6.48	16.7	3.15	0.21	8.1	Clarifier Flush 1800
0700	13	2.70	6.22	0.225	0.058	0.95	0.71	14.8	7.20	6.91			0.13	<0.03	0.89	0.02			33	6.48	17.4	3.41	0.20	8.1	
0800	14	2.63	5.97	0.186	0.053	1.45	0.74	14.7	7.11	6.82	33	<5					34.5	24.5	33	6.48	17.4	3.41	0.20	8.1	
0900	15	2.68	6.10	0.164	0.052	2.06	0.76	14.7	6.96	6.83									33	6.48	17.4	3.41	0.20	8.1	
1000	16	2.65	6.12	0.163	0.058	2.78	0.78	14.7	7.04	6.82			0.11	<0.03	1.33	0.02			33	6.48	17.4	3.41	0.20	8.1	
1100	17	2.70	6.17	0.156	0.059	3.49	0.78	14.7	7.16	6.74	33	<5					30.1	22.6	33	6.48	17.4	3.41	0.20	8.1	Clarifier Flush 1145
1200	18	2.63	6.15	0.437	0.064	0.82	0.83	14.7	7.20	6.79	32	<5							33	5.73	17.4	3.41	0.16	8.1	
1300	19	2.69	6.19	0.211	0.068	1.24	0.85	14.8	7.28	6.78			0.10	<0.03	0.97	0.02	28.5	22.0	33	5.73	17.4	3.41	0.16	8.1	
1400	20	2.64	6.28	0.175	0.062	1.99	0.88	14.8	7.23	6.78									33	5.73	18.9	3.41	0.16	8.1	
1500	21	2.61	6.30	0.168	0.051	2.64	0.88	14.8	7.21	6.78	33	<5							33	5.73	18.9	3.41	0.16	8.1	
1600	22	2.58	6.46	0.158	0.053	3.37	0.90	14.9	7.22	6.80			0.08	<0.03	0.75	0.05	26.5	23.8	33	5.73	18.9	3.41	0.16	8.1	
1700	23	2.60	6.43	0.146	0.050	4.06	0.90	14.7	7.20	6.81									33	5.73	18.9	3.41	0.16	8.1	
1800	24																								
Average		2.65	6.34	0.226	0.059			14.8	7.17	6.81	33	<5	0.11	<0.03	0.99	0.02	31.8	23.4	33	6.15	17.0	3.49	0.20	8.1	

Run 1T - Kotzebue, AK

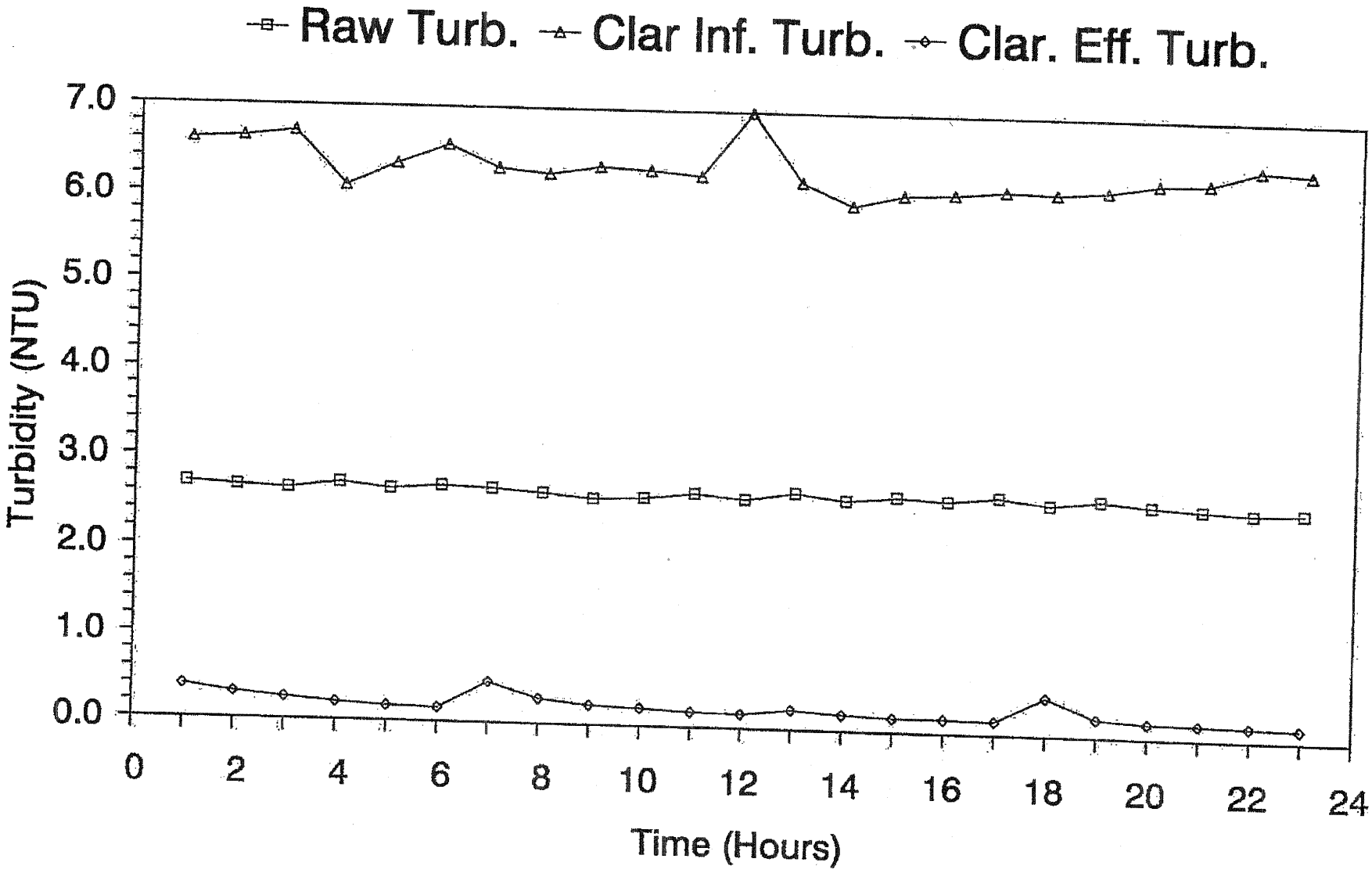

Run 1T - Kotzebue, AK

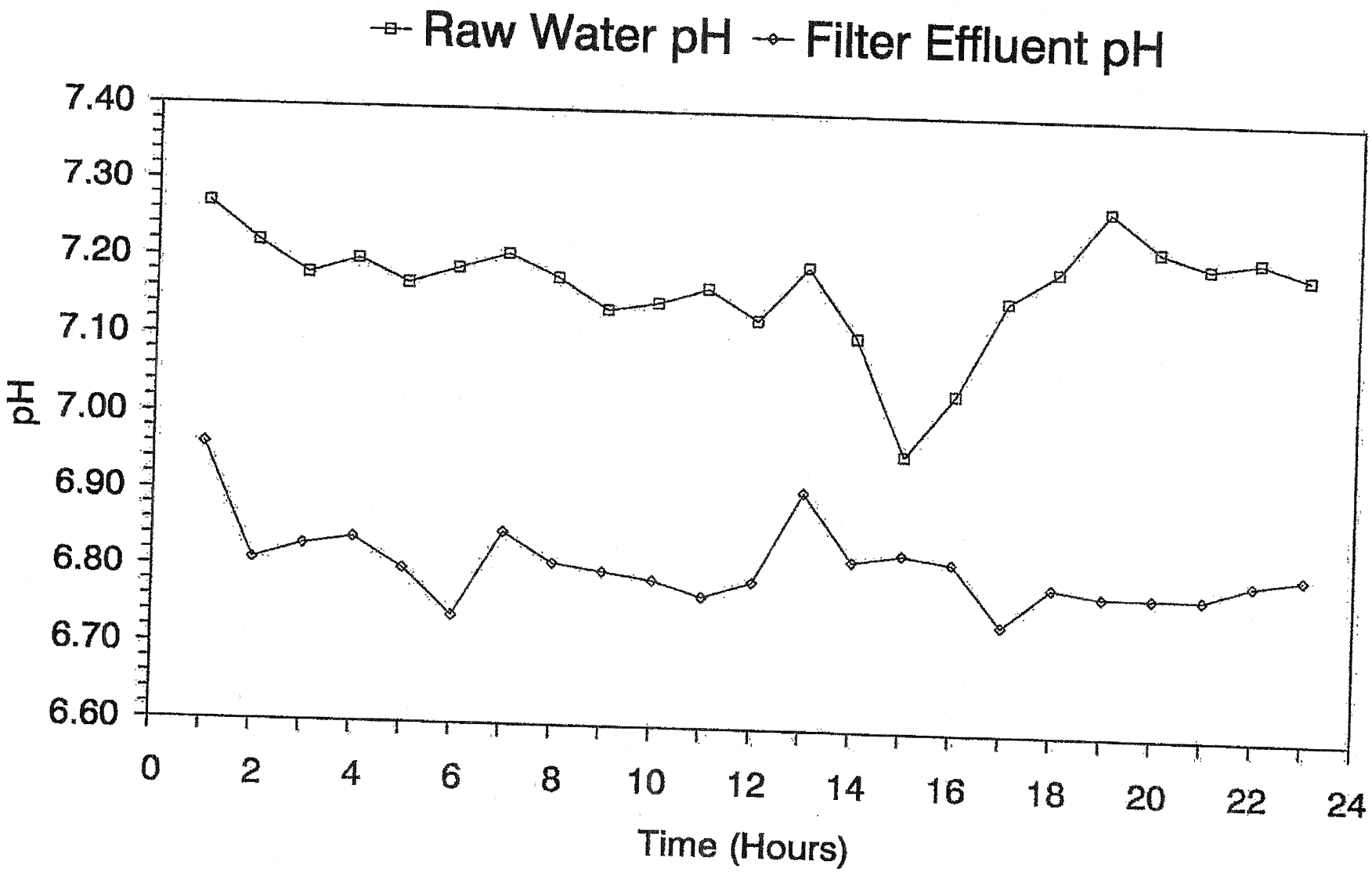

Run 2T - Kotzebue, AK

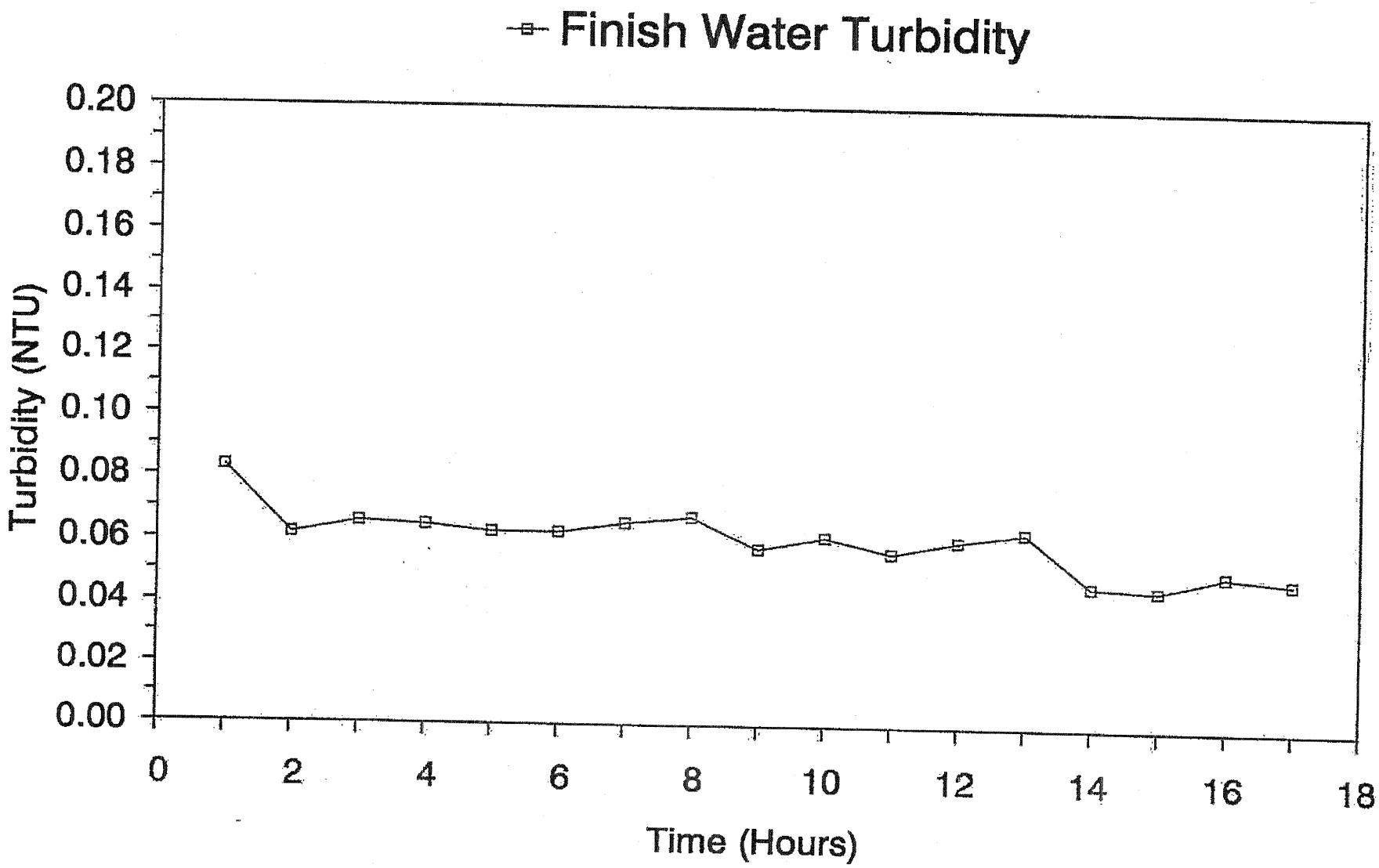

Run 2T - Kotzebue, AK

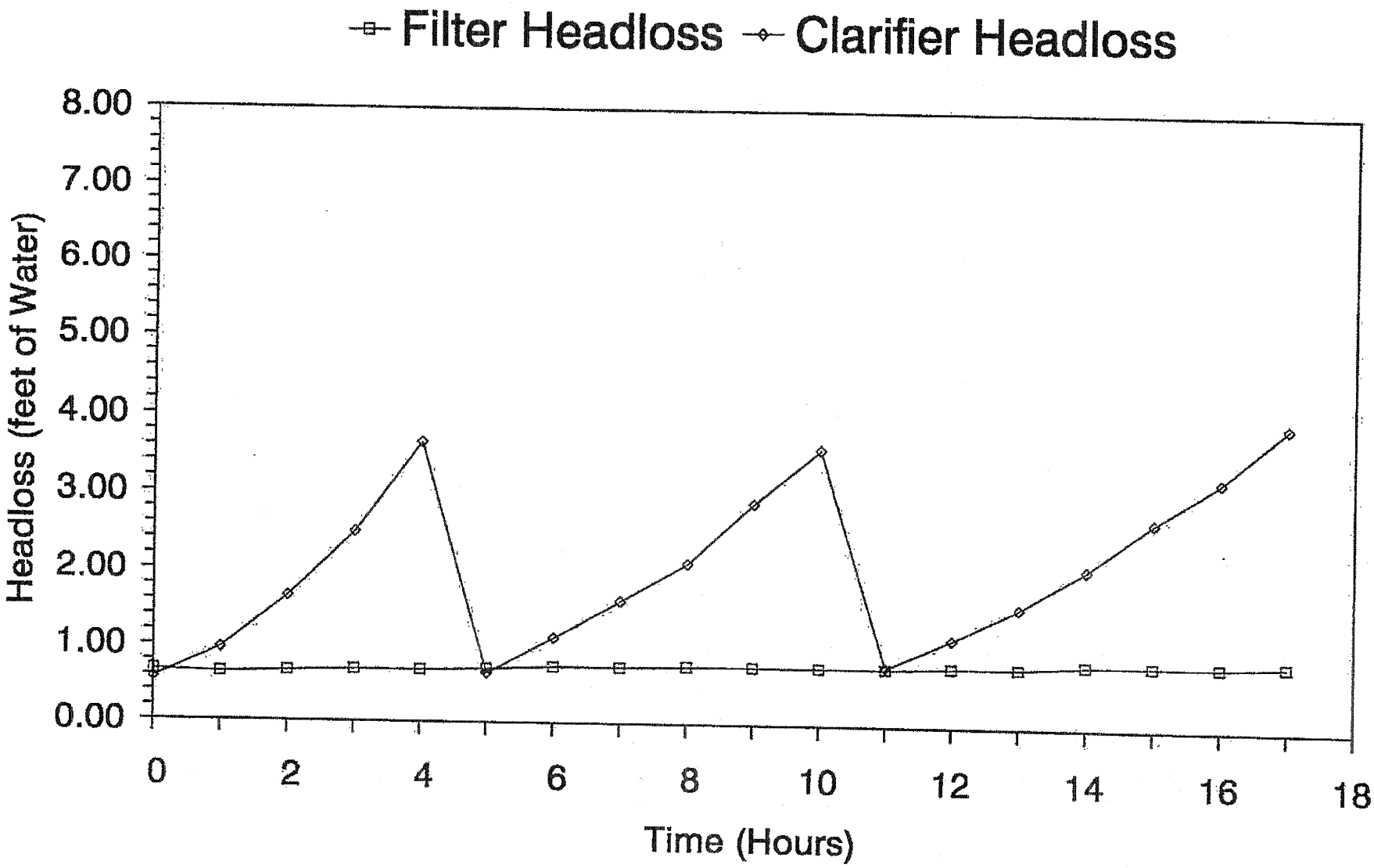

Analytica International, Inc.
5761 Silverado Way, Unit N
Anchorage, AK 99518
Phone: 907-258-2155
Fax: 907-258-6634

City of Kotzebue
Attn: Lloyd Walker
PO Box 46
Kotzebue, AK 99752
907-442-3401
Fax: 907-442-2344

Report Date: 8/16/2006
Receipt Date: 7/25/2006
Sample Date: 7/24/2006
Sample Time: 12:00:00PM
Collected By: LW

Client Sample ID: **Kotzebue Pilot Study**
Sampling Location:
Client Project: Kotzebue Pilot Study
Sample Matrix: Aqueous
COC #: 47984
PWS#:
Residual Chlorine:
Comments:

Flag Definitions:
MRL = Method Reporting Limit
MCL = Maximum Contaminant Limit
B = Present also in Method Blank
H = Exceeds Regulatory Limit
M = Matrix Interference
J = Estimated Value
D = Lost to Dilution
** = RL higher than MCL; target not detected

Lab#: A0607257-01A

Analysis Method Parameter	Result	Units	Flags	MRL	MCL	Prep Method	Prep Date	Analysis Date	Analyst
524.2/5710B-FP (Aqueous) - TTHM 5710B - FP					*Test was conducted by: Analytica - Thornton*				
Bromodichloromethane	5.51	ug/L		0.50		5710B-FP	8/4/2006	8/4/2006	JTA
Bromoform	<MRL	ug/L		0.50		5710B-FP	8/4/2006	8/4/2006	JTA
Chloroform	48.4	ug/L		10		5710B-FP	8/9/2006	8/10/2006	JTA
Dibromochloromethane	<MRL	ug/L		0.50		5710B-FP	8/4/2006	8/4/2006	JTA
Total Trihalomethane	117	ug/L	H	100	***80***	5710B-FP	8/9/2006	8/10/2006	JTA
Surrogate Recoveries	**% Rec**	**Limits**							
1,2-Dichloroethane-d4	**92.0**	(70-130)		1.0		5710B-FP	8/4/2006	8/4/2006	JTA
p-Bromofluorobenzene	**89.7**	(70-130)		1.0		5710B-FP	8/4/2006	8/4/2006	JTA
552.2/5710B-FP (Aqueous) - HLAA5 5710B - FP					*Test was conducted by: Analytica - Thornton*				
Dibromoacetic acid	<MRL	ug/L		1.0		5710B-FP	8/10/2006	8/16/2006	IK
Dichloroacetic acid	68.3	ug/L		3.0		5710B-FP	8/10/2006	8/16/2006	IK
Monobromoacetic acid	<MRL	ug/L		2.0		5710B-FP	8/10/2006	8/16/2006	IK
Monochloroacetic acid	3.91	ug/L		3.0		5710B-FP	8/10/2006	8/16/2006	IK
Total Haloacetic Acids	137	ug/L	H	15	***60***	5710B-FP	8/10/2006	8/16/2006	IK
Trichloroacetic acid	64.6	ug/L		5.0		5710B-FP	8/10/2006	8/16/2006	IK
Surrogate Recoveries	**% Rec**	**Limits**							

Claire Toon

Reported by: Claire Toon,
Laboratory Project Manager

Analytica International, Inc.
5761 Silverado Way, Unit N
Anchorage, AK 99518
Phone: 907-258-2155
Fax: 907-258-6634

City of Kotzebue
Attn: Lloyd Walker
PO Box 46
Kotzebue, AK 99752
907-442-3401
Fax: 907-442-2344

Report Date: 8/16/2006
Receipt Date: 7/25/2006
Sample Date: 7/24/2006
Sample Time: 12:00:00PM
Collected By: LW

Client Sample ID: **Kotzebue Pilot Study**
Sampling Location:
Client Project: Kotzebue Pilot Study
Sample Matrix: Aqueous
COC #: 47984
PWS#:
Residual Chlorine:
Comments:

Flag Definitions:
MRL = Method Reporting Limit
MCL = Maximum Contaminant Limit
B = Present also in Method Blank
H = Exceeds Regulatory Limit
M = Matrix Interference
J = Estimated Value
D = Lost to Dilution
** = RL higher than MCL; target not detected

Analysis Method Parameter	Result	Units	Flags	MRL	MCL	Prep Method	Prep Date	Analysis Date	Analyst
552.2/5710B-FP (Aqueous) - HLAA5 5710B - FP					*Test was conducted by: Analytica - Thornton*				
2-Bromoproprionic Acid	**97.6**	(70-130)		1.0		5710B-FP	8/10/2006	8/16/2006	IK
4500-ClG/5710 (Aqueous) - Residual Chlorine					*Test was conducted by: Analytica - Thornton*				
Chlorine, Residual	4.1	mg/L	H	0.0100	***4.0***	5710	7/27/2006	8/4/2006	IK

Lab#: A0607257-01B

Analysis Method Parameter	Result	Units	Flags	MRL	MCL	Prep Method	Prep Date	Analysis Date	Analyst
5310B/5310B (Aqueous) - TOC					*Test was conducted by: Analytica - Anchorage*				
Total Organic Carbon	3.6	mg/L		1.0		5310B	8/3/2006	8/3/2006	SG

Lab#: A0607257-01C

Analysis Method Parameter	Result	Units	Flags	MRL	MCL	Prep Method	Prep Date	Analysis Date	Analyst
5310B/5310B (Aqueous) - DOC					*Test was conducted by: Analytica - Anchorage*				
Dissolved Organic Carbon	3.4	mg/L		1.0		5310B	8/3/2006	8/3/2006	SG

Lab#: A0607257-01D

Analysis Method Parameter	Result	Units	Flags	MRL	MCL	Prep Method	Prep Date	Analysis Date	Analyst
4500-H-B/4500-H-B (Aqueous) - pH					*Test was conducted by: Analytica - Anchorage*				
pH	6.7	pH		0.0		4500-H-B	7/25/2006	7/25/2006	PL

Claire Toon

Reported by: Claire Toon,
Laboratory Project Manager

Analytica International, Inc.
5761 Silverado Way, Unit N
Anchorage, AK 99518
Phone: 907-258-2155
Fax: 907-258-6634

City of Kotzebue
Attn: Lloyd Walker
PO Box 46
Kotzebue, AK 99752
907-442-3401
Fax: 907-442-2344

Report Date: 8/16/2006
Receipt Date: 7/25/2006
Sample Date: 7/24/2006
Sample Time: 12:00:00PM
Collected By: LW

Client Sample ID: **Kotzebue Pilot Study**
Sampling Location:
Client Project: Kotzebue Pilot Study
Sample Matrix: Aqueous
COC #: 47984
PWS#:
Residual Chlorine:
Comments:

Flag Definitions:
MRL = Method Reporting Limit
MCL = Maximum Contaminant Limit
B = Present also in Method Blank
H = Exceeds Regulatory Limit
M = Matrix Interference
J = Estimated Value
D = Lost to Dilution
** = RL higher than MCL; target not detected

Lab#: A0607257-01E

Analysis Method Parameter	Result	Units	Flags	MRL	MCL	Prep Method	Prep Date	Analysis Date	Analyst
5910B/5910B (Aqueous) - UV254-UVA					*Test was conducted by: Analytica - Anchorage*				
UV 254 Ultraviolet Absorption	0.0540	cm-1		0.020		5910B	7/26/2006	7/26/2006	AJ

Lab#: A0607257-01F

Analysis Method Parameter	Result	Units	Flags	MRL	MCL	Prep Method	Prep Date	Analysis Date	Analyst
200.8/200.8 (Aqueous) - Total/TR					*Test was conducted by: Analytica - Thornton*				
Manganese	22.7	ug/L		0.050	***50***	200.8	8/8/2006	8/8/2006	KLS
200.7/200.7 (Aqueous) - Total/TR					*Test was conducted by: Analytica - Thornton*				
Calcium	13.7	mg/L		0.10		200.7	7/27/2006	7/28/2006	CC
Iron	<MRL	mg/L		0.050	***0.3***	200.7	7/27/2006	7/28/2006	CC

Claire K. Toon

Reported by: Claire Toon,
Laboratory Project Manager

Analytica Chain of Custody Form

ANALYTICA GROUP

5438 Shaune Drive, Juneau, AK 99801, (907) 780-6668, (907) 780-6670 fax
5761 Silverado Way, # N, Anchorage, AK 99518, (907) 258-2155, (907) 258-6634 fax
3330 Industrial Ave., Fairbanks, AK 99701, (907) 456-3116, (907) 456-3125 fax
12189 Pennsylvania St., Thornton, CO 80241, (303) 469-8868, (303) 469-5254 fax

Page ____ of ____

Chain of Custody No: 47984

Client Name & Address:
City of Kotzebue
P.O. Box 46
Kotzebue, AK 99752

Public Water System (PWS) ID#:

Project Name: Kotzebue Pilot Study

Quote ID:

LGN: A0607257

Account #: | Cash | Credit Card

Report to: Lloyd R. Walker
Phone No: 907-442-5209
Fax No: 907-442-2344
E-mail: wtpotz@otz.net

Turnaround Time for Results (TAT)
___ Standard ___ Expedited (< 10 days, prior authorization required)
(please specify due date below; add'l charges may apply)

Requested Due Date for Results:

Invoice to Name & Address:
City of Kotzebue
Accounts Payable
P.O. Box 46
Kotzebue, AK.

P.O. or Contract No: ?

Special Instructions/Comments:
(S) AEL

Kit Prep/Shipping Charge: $

Requested Analysis/Method

Client Sample Identification / Location	Date Sampled	Time Sampled	Matrix (S-DW-WW-Other)	No. of Containers	THM/HAA5 SDS	TOC	DOC	pH 150.1	UV 254	DA, Fe, Mn		Field Preserved	Field Filtered	MS/MSD ?
Kotzebue Pilot Study	7/24/06	1202pm			X	X	X	X	X	X				

Relinquished by:	Date	Time	Received by:	Date	Time
[signature]	7/24/06	2:35pm	[signature]	7-24-06	2:35p
Relinquished by:	Date	Time	Received by:	Date	Time
			Anne Gleason	7/25/06	0815
Relinquished by:	Date	Time	Received by:	Date	Time
[signature]	7/25	1200			

Name of Sampler: (printed)

Section To Be Completed by Analytica

	THO	ANC	JNU	FBKS
Condition of Custody Seal?:		—		
Initialed By:		—		
Temp/Loc:		9.4°C		
Thermo ID#:		967		
Shipped Via:		Alert		

Version 2.0

ANALYTICA

Cooler Receipt Form

Client: City of Kotzebue **Client Code:** 600170 **Order #:** A0607257
Project: Kotzebue Pilot Study

Cooler ID: 1

A. Preliminary Examination Phase: **Date cooler opened:** 7/25/2006
Cooler opened by: jc **Signature:**

1. **Was airbill Attached?** N/A **Airbill #:** **Carrier Name:** Other
2. **Custody Seals?** N/A **How many?** 0 **Location:** **Seal Name:**
3. **Seals intact?** N/A
4. **COC Attached?** Yes **Properly Completed?** Yes **Signed by AEL employee?** Yes
5. **Project identification from custody paper:** Kotzebue Pilot Study
6. **Preservative:** **Temperature:** 9.4

Designated person initial here to acknowledge receipt: JC **Date:** 7/25/06

COMMENTS:

B. Log-In Phase: **Samples Log-in Date:** 7/25/2006 **Log-in By:** jc

1. **Packing Type:**
2. **Were samples in separate bags?** Yes
3. **Were containers intact?** Yes **Labels agree with COC?** Yes
4. **Number of bottles received:** 6 **Number of samples received:** 1
5. **Correct containers used?** Yes **Correct preservatives added?** N/A
6. **Sufficient sample volume?** N/A
7. **Bubbles in VOA samples?** N/A
8. **Was Project manager called and status discussed?** No
9. **Was anyone called?** No **Who was called?** _____ **By whom?** _____ **Date:** _____

COMMENTS:

APPENDIX G

2005 WATER TREATMENT PLANT STRUCTURAL EVALUATION

LCG, Inc.
LARSEN CONSULTING GROUP

March 28, 2005

Mr. Jeff Hadley
Director of Public Works/Capital Projects
City of Kotzebue
PO Box 46
Kotzebue, Alaska 99752

Re: Structural evaluation of WTP

Dear Jeff:

Please find the enclosed structural evaluation report for your review. The findings of this report are somewhat technical in nature due to the specific nature of this type of evaluation. We would recommend that Bud and I sit down with you and thoroughly discuss the report for the benefit of all parties involved so everyone has a clear understanding of the buildings condition.

There is one area of concern at this time that we would like to have addressed as soon as possible in order to protect the safety for the occupants of the building. This is the issue of the failed concrete roof support column in the section "A" of the plant. This column should be replaced or shored up until the future of the building is determined. There are no other areas at this time that warrant immediate action.

Please contact us if you have any questions or additional comments regarding this report.

Sincerely,

Danny Graham, PE
Senior Structural Engineer

3710 Woodland Drive, Suite 2100, Anchorage, Alaska 99517 · Telephone: (907) 243-8985 · Fax: (907) 243-5629

Water Treatment Building:

The entire water treatment facility is made up of many smaller buildings that have been remodeled and/or added onto over the years and now comprise what is known as the current water treatment building. After reviewing existing as-built drawings and conducting a thorough field investigation we have been able to determine that the current treatment building was constructed in seven different phases, spread out over the last 30 years, (See attached key plan). Many different types of structural systems have been incorporated into these additions, which is not a good direction to move in because the different systems will not be compatible when subjected to earthquake loading and will result in damage to the connections at the various systems. Most of the building is constructed with a metal type material while some of the later additions are of wood construction. The metal buildings rely on a moment resisting frame lateral system combined with some steel "X" type bracing which is normal metal building construction. The wood frame portions are primarily shearwall type buildings with only one exception, that being in the phase of the building that was added on for the first treatment tank.

Note: The building phase designations follow the order of construction progressively with age starting with the earliest to the latest to the best of our knowledge. See SK1 for Key Plan.

Building Portion "A"

Observations:

Phase "A" is approximately a 20 foot square building and is believed to be the original building that is attached to the storage tank and was part of the original tank construction. This part of the treatment building houses the intake lines from the old and the new storage tanks. It is a three sided building as it is attached directly to the side of the old storage tank and is constructed of metal sides and roof. The interior surfaces are coated with a heavy sprayed on insulation and fire coating so it is not possible at this time to truly evaluate the integrity of the structural framing itself.

Findings:

There is an eight inch round concrete column in the center of the room that supports the roof that has failed and is exhibiting excessive lateral compression buckling. Once a column reaches this level of degradation it must be considered dangerous and must be replaced as soon as possible. This should not be a difficult task once the spray-on insulation is removed and the roof framing element that the column is supporting is exposed. A new engineered steel column can be installed and the rest of the building will continue to serve the plant. The concrete slab floor is old and has a lot of cracking but doesn't appear to pose any threat to the stability of the building.

Building Phase "B"

Observations:

Phase "B" is approximately a 20 foot by 40 foot building that is attached to portion "A". This part of the treatment building houses the pressure pumps, flow meters, and the hydro-pneumatic tanks. It is constructed of metal sides and roof very much like those of phase "A". The interior surfaces are again coated with a heavy sprayed on insulation and fire coating so it's not possible at this time to fully evaluate the integrity of the structural framing itself. This is not a structural issue, but I want it to be noted that the concrete floor slab is so modified with concrete

housekeeping pads and curbs that it's difficult just to walk around without tripping. If the power was to go out and someone had to exit the building this is one area that would be considered unsafe from an exiting movement pattern.

Findings:

I have two areas of concern with this portion of the treatment plant. The first being the integrity of the roof collar ties. Given the required snow loading for this region and the size of the roof area it would appear that the collar tie members and their connections are not as adequate as they should be. The second being the fact that the building had to be designed as a closed wall structure as it was originally constructed and since the addition of phase "D", has had the end wall removed. This wall had to be a shearwall for the "B" phase in its initial inception and there is no replacement lateral system to compensate for the removal of the end wall. It could transfer into the new shearwall of phase "D" when it was designed but I cannot see the transfer connection.

Building Phase "C"

Observations:

Phase "C" is approximately a 50 foot by 40 foot building. This phase of the facility was a stand alone building until it was connected to the A and B phase in around 1980. In addition to having been connected to the earlier phase it has had several other attached buildings added to it. It houses the 12,000 gallon surge tank, boilers, the old flocculation tank, sewage lift station, and the 700 +/- square foot second level plant operator's offices and labs. It is a typical metal building type construction with a moment frame in one direction and an "X" braced frame in the other direction. The interior surfaces are again coated with a heavy sprayed on insulation and fire coating. As in the "B" phase of the facility the concrete floor slab is so broken up with curbs, pits, and pads that exiting the building would have to be considered unsafe in an emergency situation. The plant operating crew pointed out to me that the building leaks where other phase have been attached to it.

Findings:

This phase of the facility appears to be in fairly good shape from a structural standpoint. There is one significant problem with the lateral bracing system at the south wall. The south and north walls of this phase are the walls that incorporate the "X" bracing lines. When the boiler room was remodeled into this part of the building it appears as though they removed an "X" from the south wall to make room for the new boiler room wall. I cannot identify a replacement element to satisfy the lateral stability requirements for this wall. There are no other walls that line with the south wall so the lateral force is not being drug into another portion of the building. The fact is that this same line at the "E" phase of the building has had bracing lines removed, or never installed as detailed in the construction documents dated 6-01-84, and this will make this line in the whole building very weak for lateral resistance.

Building Phase "D"

Observations:

Phase "D" is approximately a 60 foot long by 20 foot wide building that adjoined building "C" with building "B" sometime around 1980. This phase of the facility then connected to two separate buildings into one single facility. It also gave the building its first dock high service level entry for

loading and unloading heavy materials. It houses most of the inside storage of plant materials and the alum mixing bin. It is a metal type building construction with what appears to be an "X" braced frame for lateral stability. The interior surfaces are coated with a heavy sprayed on insulation and fire coating.

Findings:

This phase of the facility also appears to be in fairly good shape from a structural standpoint. The concrete is good shape with very little cracking or settling. No significant structural problems were identified.

Building Phase "E"

Observations:

Phase "E" is approximately a 50 foot long by 20 foot wide building that adjoins building "C" and building "D" in the back of the plant. It was constructed sometime around 1984. This phase of the facility was constructed to house the new packaged treatment units. It is a wood framed shearwall type building with 2x6 studs at 12 inch on centers, and a wood roof comprised of 2x12's at 12 inch on centers. One wall, the south wall, had a large "X" brace element designed into the system because there is a large pass through at this wall and a shearwall would not work. The interior surfaces are coated with a heavy sprayed on insulation and fire coating. Where the roof was attached to phase "C" is where the roof appears to be leaking when they have snow melt or heavy rains.

Findings:

This building was designed based on good materials and sound engineering. Unfortunately when the building was built the "X" bracing at the south wall was omitted. It's possible that it was taken out at a later point in time but the fact remains that it's missing and it is a critical element in the lateral resistance of the building in the east-west loading direction. There is one other problem area and that is the east wall which was opened up after the "F" phase of the facility was added on. Shearwall was removed from this wall to allow access the second treatment unit. This jeopardizes the lateral strength of the building in the north-south direction as well. The 6x6 columns at the west wall are approximately 17 feet tall and are unbraced for the entire height. This appears to be a little excessive for a 6x6 column, but would require engineering calculations to verify and not enough information is known at this time to run accurate calculations.

Building Phase "F"

Observations:

Phase "F" is approximately a 65 foot long by 20 foot wide building that is attached to phase "D" and building "E" and makes up the entire back elevation of the plant. It is not known when this addition was added to the plant building. This phase of the facility was constructed to house the second package treatment unit. It is a wood framed shearwall type building with 2x6 studs at 12 inch on center, and a wood roof comprised of 2x12's at 12 inch on center very similar to the "E" phase.

Findings:

This building as with the "E" phase appears to have been designed based on good materials and sound engineering. No significant structural problems were identified in this portion of the plant.

Building Phase "G"

Observations:

Phase "G" is approximately a 22 foot long by 12 foot wide building that is attached to phase "C". It is not known when this addition was added to the plant building. This phase of the facility was constructed to house the generator for back-up power to the plant. It is a wood framed shearwall type building with 2x6 studs at 16 inch on centers, and a wood roof.

Findings:

This building appears to have been designed based on good materials. No significant structural problems were identified in this portion of the plant.

Conclusion:

As noted in the above findings, most phases of the building has been identified with varying levels of structural problems. Some of them are minor, while some are very significant. All of them can probably be resolved from a strictly engineering standpoint. The cost to do so is a much more important issue. The building as a whole is probably reaching its life expectancy given the geographical location and the harsh environment associated with the region. If we look at the difficulty of simply making the many repairs with the plant still in operation, the city must have a supply of water, coupled with the high cost associated with retrofitted projects it is our opinion that the money spent of accomplish these task would be better spent on a new facility that would serve the city well into the future.

If funding can be allocated to build a new facility, the existing plant could continue to serve the city, with minor repairs being made, while the new one is being built and the impact on the services to the users would be minimal.

On the other hand, if funding is scarce, the existing building maybe repaired and maintained in service at a slightly lower capital cost. In this case, there remains the risk of significant damage in the event of a severe earthquake or high wind storm, and the WTP buildings would remain a weak point in the Kotzebue water system.

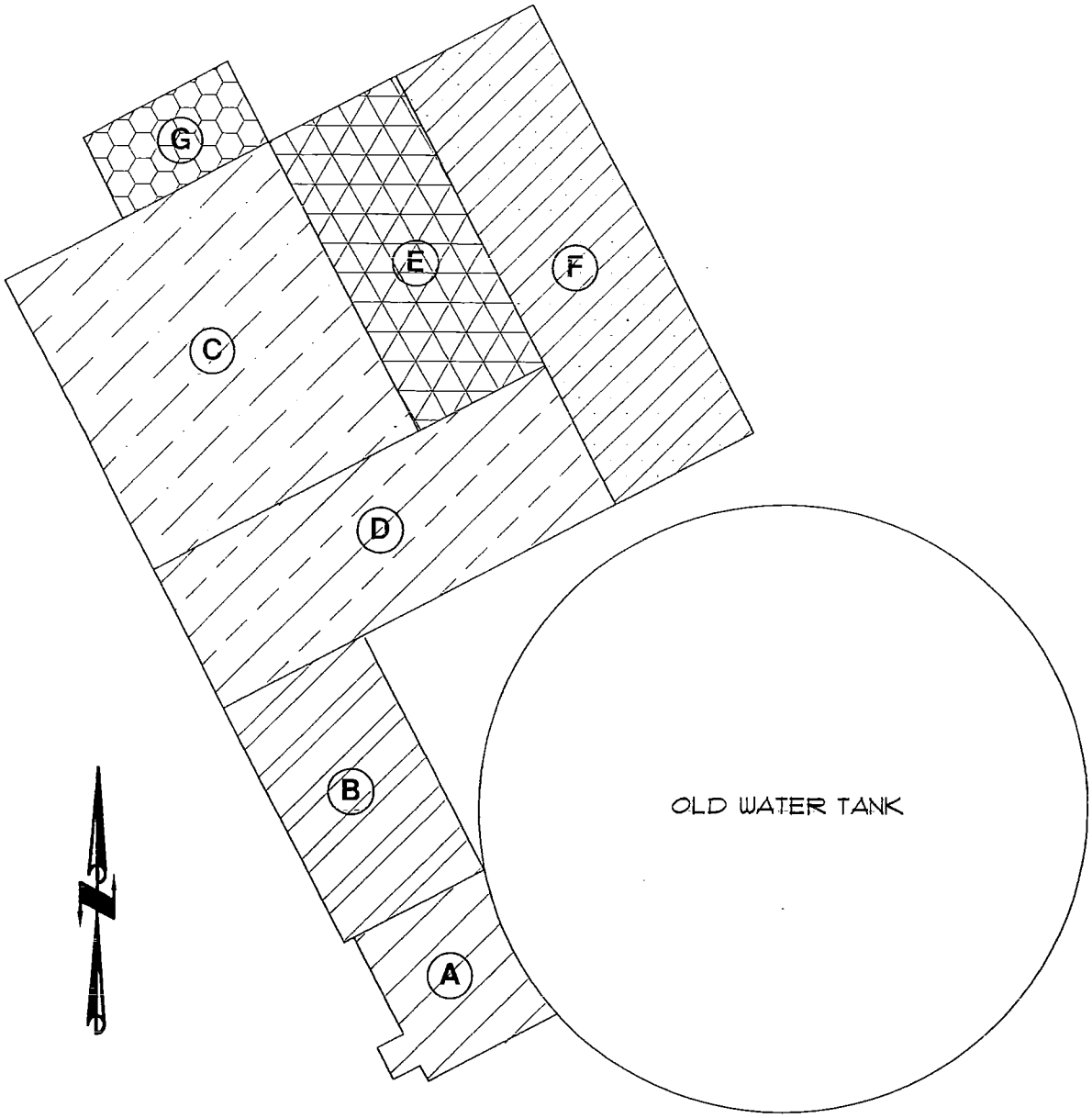

(A) DESIGNATES CONSTRUCTION PHASE

LCG, Inc.
LARSEN CONSULTING GROUP
architecture · engineering · surveying

DRAWING NAME:

PHASE KEY PLAN

KOTZEBUE WATER TREATMENT PLANT

DESIGNED BY:	DG
DATE:	03/30/05
SCALE:	NTS
JOB NO:	336.18

SHEET SK1

APPENDIX H

WATER AND SEWER ENTERPRISE FINANCIAL REPORTS 2008-2010

CITY OF KOTZEBUE, ALASKA

Basic Financial Statements, Supplementary
Information and Single Audit Reports

Year Ended June 30, 2008

CITY OF KOTZEBUE, ALASKA

Table of Contents

FINANCIAL SECTION	Exhibit	Page
Independent Auditor's Report		1-2
Basic Financial Statements		
Government-wide Financial Statements:		
Statement of Net Assets	A-1	4
Statement of Activities	A-2	5
Fund Financial Statements:		
Governmental Funds:		
Balance Sheet	B-1	6
Reconciliation of Governmental Funds Balance Sheet to Statement of Net Assets	B-2	7
Statement of Revenues, Expenditures and Changes in Fund Balances	B-3	8
Reconciliation of Change in Fund Balances of Governmental Funds to Statement of Activities	B-4	9
Statement of Revenues, Expenditures and Changes in Fund Balance - Budget and Actual:		
General Fund	C-1	10
Gaming Special Revenue Fund	C-2	11
Enterprise Funds:		
Statement of Net Assets	D-1	12
Statement of Revenues, Expenses and Changes in Net Assets	D-2	13
Statement of Cash Flows	D-3	14
Notes to Basic Financial Statements		15-31
Supplementary Information		
Combining and Individual Fund Financial Statements and Schedules:		
Nonmajor Governmental Funds:		
Combining Balance Sheet	E-1	32
Combining Statement of Revenues, Expenditures and Changes in Fund Balances (Deficits)	E-2	33
General Fund:		
Balance Sheet	F-1	35
Schedule of Revenues, Expenditures and Changes in Fund Balance - Budget and Actual	F-2	36-41

CITY OF KOTZEBUE, ALASKA

Table of Contents, continued

FINANCIAL SECTION, continued	Exhibit	Page
Supplementary Information, continued		
Combining and Individual Fund Financial Statements and Schedules, continued:		
Special Revenue Funds:		
Schedule of Revenues, Expenditures and Changes in Fund Balance – Budget and Actual:		
Gaming	G-1	43
Adult Center	G-2	44
Enterprise Funds:		
Water and Sewer Utility:		
Statement of Net Assets	H-1	46
Statement of Revenues, Expenses and Changes in Net Assets	H-2	47-48
Statement of Cash Flows	H-3	49
Combining Schedule of Water and Sewer Capital Projects	H-4	50
Refuse:		
Statement of Net Assets	H-5	51
Statement of Revenues, Expenses and Changes in Net Assets	H-6	52
Statement of Cash Flows	H-7	53
Schedule of Expenditures of Federal Awards	I-1	54
Schedule of State Financial Assistance	J-1	55
Notes to the Schedules of Expenditures of Federal Awards and State Financial Assistance		56
SINGLE AUDIT SECTION		
Independent Auditor's Report on Internal Control Over Financial Reporting and on Compliance and Other Matters Based on an Audit of Financial Statements Performed in Accordance with *Government Auditing Standards*		58-59

CITY OF KOTZEBUE, ALASKA

Table of Contents, continued

SINGLE AUDIT SECTION, continued	Page
Independent Auditor's Report on Compliance with Requirements Applicable to Each Major Program and on Internal Control Over Compliance in Accordance with OMB Circular A-133	60-61
Independent Auditor's Report on Compliance with Requirements Applicable to Each Major Program and on Internal Control Over Compliance in Accordance with the *State of Alaska Audit Guide and Compliance Supplement for State Single Audits*	62-63
Schedule of Findings and Questioned Costs	64-65
Summary Schedule of Prior Audit Findings	66
Corrective Action Plan	67

Mikunda,
Cottrell & Co., Inc.
Certified Public Accountants & Consultants

RSM McGladrey Network
An Independently Owned Member

Offices in Anchorage & Kenai

Independent Auditor's Report

Honorable Mayor and City Council
City of Kotzebue, Alaska

We have audited the accompanying financial statements of the governmental activities, the business-type activities, each major fund, and the aggregate remaining fund information of the City of Kotzebue, Alaska, as of and for the year ended June 30, 2008, which collectively comprise the City's basic financial statements as listed in the table of contents. These financial statements are the responsibility of the City's management. Our responsibility is to express opinions on these financial statements based on our audit.

We conducted our audit in accordance with auditing standards generally accepted in the United States of America and the standards applicable to financial audits contained in *Government Auditing Standards* issued by the Comptroller General of the United States. Those standards require that we plan and perform the audit to obtain reasonable assurance about whether the financial statements are free of material misstatement. An audit includes examining, on a test basis, evidence supporting the amounts and disclosures in the financial statements. An audit also includes assessing the accounting principles used and significant estimates made by management, as well as evaluating the overall financial statement presentation. We believe that our audit provides a reasonable basis for our opinions.

In our opinion, the financial statements referred to above present fairly, in all material respects, the respective financial position of the governmental activities, the business-type activities, each major fund, and the aggregate remaining fund information of the City of Kotzebue, Alaska, as of June 30, 2008, and the respective changes in financial position and cash flows, where applicable, thereof and the respective budgetary comparison for the General Fund and Gaming Special Revenue Fund for the year then ended in conformity with accounting principles generally accepted in the United States of America.

In accordance with *Government Auditing Standards*, we have also issued our report dated November 17, 2008, on our consideration of City of Kotzebue's internal control over financial reporting and on our tests of its compliance with certain provisions of laws, regulations, contracts, and grant agreements and other matters. The purpose of that report is to describe the scope of our testing of internal control over financial reporting and compliance and the results of that testing, and not to provide an opinion on the internal control over financial reporting or on compliance. That report is an integral part of an audit performed in accordance with *Government Auditing Standards* and should be considered in assessing the results of our audit.

3601 "C" Street, Suite 600 • Anchorage, Alaska 99503 • (907) 278-8878 • Fax (907) 278-5779 • www.mcc-cpa.com

Honorable Mayor and City Council
City of Kotzebue, Alaska

City of Kotzebue has not presented the Management's Discussion and Analysis that accounting principles generally accepted in the United States of America require to supplement, although not to be part of, the basic financial statements.

Our audit was conducted for the purpose of forming opinions on the financial statements that collectively comprise the City of Kotzebue's basic financial statements. The accompanying Schedule of Expenditures of Federal Awards, Schedule of State Financial Assistance, and the combining and individual fund financial statements and schedules listed in the table of contents are presented for purposes of additional analysis and are not a required part of the basic financial statements. The Schedule of Expenditures of Federal Awards is required by U.S. Office of Management and Budget Circular A-133, *Audits of States, Local Governments, and Nonprofit Organizations* and the Schedule of State Financial Assistance is required by the *State of Alaska Audit Guide and Compliance Supplement for State Single Audits*. Such information has been subjected to the auditing procedures applied in the audit of the basic financial statements and, in our opinion, is fairly stated in all material respects in relation to the basic financial statements taken as a whole.

Mikunda, Cottrell & Co.

Anchorage, Alaska
November 17, 2008

BASIC FINANCIAL STATEMENTS

Exhibit A-1

CITY OF KOTZEBUE, ALASKA
Statement of Net Assets
June 30, 2008

Assets	Governmental Activities	Business-type Activities	Total
Cash and investments	$ 1,546,697	1,884,956	3,431,653
Receivables, net of allowance for uncollectible amounts:			
Accounts	-	282,085	282,085
Grants and shared revenues	92,794	1,156,612	1,249,406
Sales tax	224,374	-	224,374
Other	161,082	-	161,082
Capital assets:			
Land and construction in progress	497,270	2,650,016	3,147,286
Other capital assets, net of depreciation	3,677,668	25,840,138	29,517,806
Total assets	$ 6,199,885	31,813,807	38,013,692
Liabilities			
Accounts payable	79,313	579,387	658,700
Accrued payroll and payroll liabilities	194,682	35,367	230,049
Unearned revenue	58,575	8,622	67,197
Deposits	-	195	195
Noncurrent liabilities:			
Due within one year - accrued leave	261,416	56,025	317,441
Due in more than one year:			
Landfill closure costs	-	564,571	564,571
Net pension/OPEB obligation	103,001	23,297	126,298
Total liabilities	696,987	1,267,464	1,964,451
Net Assets			
Invested in capital assets	4,174,938	28,490,154	32,665,092
Unrestricted	1,327,960	2,056,189	3,384,149
Total net assets	5,502,898	30,546,343	36,049,241
Total liabilities and net assets	$ 6,199,885	31,813,807	38,013,692

See accompanying notes to basic financial statements.

Exhibit A-2

CITY OF KOTZEBUE, ALASKA
Statement of Activities
Year Ended June 30, 2008

Activities	Expenses	Program Revenues: Fees, Fines & Charges for Services	Program Revenues: Operating Grants & Contributions	Program Revenues: Capital Grants & Contributions	Net (Expense) Revenue and Changes in Net Assets: Governmental Activities	Net (Expense) Revenue and Changes in Net Assets: Business-type Activities	Net (Expense) Revenue and Changes in Net Assets: Totals
Governmental:							
General government	$ 1,305,379	584,323	-	-	(721,056)	-	(721,056)
Public safety	2,763,580	272,576	942,448	-	(1,548,556)	-	(1,548,556)
Public works	1,813,520	-	-	294,697	(1,518,823)	-	(1,518,823)
Community services	90,238	-	-	-	(90,238)	-	(90,238)
Adult Center operations	184,076	74,535	-	-	(109,541)	-	(109,541)
Gaming operations	1,241,379	1,351,548	-	-	110,169	-	110,169
Total governmental activities	7,398,172	2,282,982	942,448	294,697	(3,878,045)	-	(3,878,045)
Business-type:							
Water and sewer utility	3,494,799	1,821,969	-	3,071,088	-	1,398,258	1,398,258
Refuse	1,072,729	728,277	-	-	-	(344,452)	(344,452)
Total business-type activities	4,567,528	2,550,246	-	3,071,088	-	1,053,806	1,053,806
Totals	$ 11,965,700	4,833,228	942,448	3,365,785	(3,878,045)	1,053,806	(2,824,239)
General revenues:							
Taxes:							
Sales taxes					$ 2,896,490	-	2,896,490
Penalties and interest on delinquent taxes					13,541	-	13,541
Other taxes					86,446	-	86,446
Grants and entitlements not restricted to a specific purpose					586,445	-	586,445
Investment income					115,292	19,101	134,393
Other					20,011	-	20,011
Total general revenues					3,718,225	19,101	3,737,326
Change in net assets					(159,820)	1,072,907	913,087
Net assets, beginning of year					5,662,718	29,473,436	35,136,154
Net assets, end of year					$ 5,502,898	30,546,343	36,049,241

See accompanying notes to basic financial statements.

Exhibit B-1

CITY OF KOTZEBUE, ALASKA

Governmental Funds
Balance Sheet
June 30, 2008

Assets		Major Funds General	Major Funds Gaming Special Revenue	Nonmajor Funds	Total Governmental Funds
Cash and investments	$	1,269,959	243,607	33,131	1,546,697
Receivables:					
Grants and shared revenues		92,794	-	-	92,794
Sales tax		224,374	-	-	224,374
Other		161,082	-	-	161,082
Due from other funds		160,798	-	-	160,798
Total assets	$	1,909,007	243,607	33,131	2,185,745
Liabilities and Fund Balances					
Liabilities:					
Accounts payable		73,202	5,286	825	79,313
Accrued payroll and payroll liabilities		185,741	5,687	3,254	194,682
Deferred revenue		58,575	-	-	58,575
Due to other funds		-	140,910	19,888	160,798
Total liabilities		317,518	151,883	23,967	493,368
Fund balances:					
Reserved for encumbrances		15,727	-	-	15,727
Unreserved:					
Designated for subsequent year's expenditures		163,186	-	-	163,186
Undesignated		1,412,576	91,724	9,164	1,513,464
Total fund balances		1,591,489	91,724	9,164	1,692,377
Total liabilities and fund balances	$	1,909,007	243,607	33,131	2,185,745

See accompanying notes to basic financial statements.

Exhibit B-2

CITY OF KOTZEBUE, ALASKA

Reconciliation of Governmental Funds Balance Sheet
to Statement of Net Assets
June 30, 2008

Total fund balances for governmental funds		$ 1,692,377
Total net assets reported for governmental activities in the Statement of Net Assets is different because:		
Capital assets used in governmental activities are not financial resources and therefore are not reported in the funds. These assets, net of accumulated depreciation consist of:		
Land and land improvements	$ 497,270	
Buildings	5,462,829	
Machinery and equipment	1,979,755	
Total capital assets	7,939,854	
Less accumulated depreciation	(3,764,916)	
Total capital assets, net of accumulated depreciation		4,174,938
Long-term liabilities are not due and payable in the current period and therefore are not reported as fund liabilities. These liabilities consist of:		
Net pension/OPEB obligation	(103,001)	
Accrued leave	(261,416)	
Total long term liabilities		(364,417)
Total net assets of governmental activities		$ 5,502,898

See accompanying notes to basic financial statements.

Exhibit B-3

CITY OF KOTZEBUE, ALASKA

Governmental Funds

Statement of Revenues, Expenditures and Changes in Fund Balances

Year Ended June 30, 2008

	Major Funds			
	General	Gaming Special Revenue	Nonmajor Funds	Total Governmental Funds
Revenues:				
Taxes	$ 2,996,477	-	-	2,996,477
Intergovernmental	1,528,893	-	265,460	1,794,353
Charges for services	804,202	-	-	804,202
Investment income	115,292	-	-	115,292
Gaming	-	1,351,548	-	1,351,548
Adult Center	-	-	74,535	74,535
Other	72,708	-	29,237	101,945
Total revenues	5,517,572	1,351,548	369,232	7,238,352
Expenditures:				
Current:				
General government	1,180,964	-	-	1,180,964
Public safety	2,557,813	-	-	2,557,813
Public works	1,455,830	-	-	1,455,830
Community services	77,056	-	-	77,056
Gaming operations	-	1,240,174	-	1,240,174
Adult Center operations	-	-	145,112	145,112
Nondepartmental	162,223	-	-	162,223
Capital outlay	-	-	287,476	287,476
Total expenditures	5,433,886	1,240,174	432,588	7,106,648
Excess of revenues over (under) expenditures	83,686	111,374	(63,356)	131,704
Other financing sources (uses):				
Transfers in	-	-	72,199	72,199
Transfers out	(1,622)	(70,577)	-	(72,199)
Net other financing sources (uses)	(1,622)	(70,577)	72,199	-
Net change in fund balances	82,064	40,797	8,843	131,704
Fund balances, beginning of year	1,509,425	50,927	321	1,560,673
Fund balances, end of year	$ 1,591,489	91,724	9,164	1,692,377

See accompanying notes to basic financial statements.

Exhibit B-4

CITY OF KOTZEBUE, ALASKA

Reconciliation of Change in Fund Balances of Governmental Funds
to Statement of Activities
Year Ended June 30, 2008

Net change in fund balances - total governmental funds	$ 131,704
The change in net assets reported for governmental activities in the Statement of Activities is different because:	
Governmental funds report capital outlays as expenditures. However on the Statement of Activities, depreciation expense is recognized to allocate the cost of these items over their estimated useful lives. This is the amount by which depreciation ($271,080) exceeded capital outlay ($17,089).	(253,991)
Some expenses reported in the Statement of Activities do not require the use of current financial resources and, therefore, are not reported as expenditures in governmental funds. This is the amount of increase in accrued leave.	(37,533)
Change in net assets of governmental activities	$ (159,820)

See accompanying notes to basic financial statements.

Exhibit C-1

CITY OF KOTZEBUE, ALASKA
General Fund
Statement of Revenues, Expenditures, and
Changes in Fund Balance - Budget and Actual
Year Ended June 30, 2008

	Original Budget	Final Budget	Actual	Variance with Final Budget Positive (Negative)
Revenues:				
Taxes	$ 3,095,200	3,072,200	2,996,477	(75,723)
Intergovernmental	1,531,430	1,428,821	1,528,893	100,072
Charges for services	894,000	775,000	804,202	29,202
Investment income	90,000	90,000	115,292	25,292
Other	104,850	79,350	72,708	(6,642)
Total revenues	5,715,480	5,445,371	5,517,572	72,201
Expenditures:				
General government	1,251,495	1,284,914	1,180,964	103,950
Public safety	2,528,318	2,631,369	2,557,813	73,556
Public works	1,591,437	1,587,798	1,455,830	131,968
Community services	80,000	87,000	77,056	9,944
Nondepartmental	350,000	361,260	162,223	199,037
Total expenditures	5,801,250	5,952,341	5,433,886	518,455
Excess of revenues over (under) expenditures	(85,770)	(506,970)	83,686	590,656
Other financing uses - transfers out	-	(12,691)	(1,622)	11,069
Net change in fund balance	$ (85,770)	(519,661)	82,064	601,725
Fund balance, beginning of year			1,509,425	
Fund balance, end of year			$ 1,591,489	

See accompanying notes to basic financial statements.

Exhibit C-2

CITY OF KOTZEBUE, ALASKA
Gaming Special Revenue Fund
Statement of Revenues, Expenditures and
Changes in Fund Balance - Budget and Actual
Year Ended June 30, 2008

		Original Budget	Final Budget	Actual	Variance Positive (Negative)
Revenues:					
Bingo and pull tabs	$	1,197,000	1,297,000	1,351,548	54,548
Other		5,390	1,050	-	(1,050)
Total revenues		1,202,390	1,298,050	1,351,548	53,498
Expenditures:					
Personnel		138,147	141,508	140,183	1,325
Rent		28,600	29,300	30,250	(950)
Supplies		26,700	29,900	28,963	937
Payouts to winners		850,000	948,153	954,901	(6,748)
Donations		50,000	50,000	50,000	-
Allocated administration		18,200	18,200	19,392	(1,192)
Other		16,910	16,510	16,485	25
Total expenditures		1,128,557	1,233,571	1,240,174	(6,603)
Excess of revenues over expenditures		73,833	64,479	111,374	46,895
Other financing uses - transfers out		(73,117)	(77,170)	(70,577)	6,593
Net change in fund balance	$	716	(12,691)	40,797	53,488
Fund balance, beginning of year				50,927	
Fund balance, end of year			$	91,724	

See accompanying notes to basic financial statements.

Exhibit D-1

CITY OF KOTZEBUE, ALASKA
Enterprise Funds
Statement of Net Assets
June 30, 2008

Assets	Major Funds: Water and Sewer Utility	Major Funds: Refuse	Total Enterprise Funds
Current assets:			
Cash and investments	$ 1,862,359	22,597	1,884,956
Receivables:			
Accounts	349,705	135,996	485,701
Allowance for doubtful receivables	(147,231)	(56,385)	(203,616)
Grants	1,156,612	-	1,156,612
Net receivables	1,359,086	79,611	1,438,697
Total current assets	3,221,445	102,208	3,323,653
Property, plant, and equipment	70,727,354	5,638,987	76,366,341
Accumulated depreciation	(44,262,260)	(3,613,927)	(47,876,187)
Net property, plant, and equipment	26,465,094	2,025,060	28,490,154
Total assets	$ 29,686,539	2,127,268	31,813,807
Liabilities and Net Assets			
Liabilities:			
Current liabilities:			
Accounts payable	576,978	2,409	579,387
Accrued payroll and payroll liabilities	23,606	11,761	35,367
Accrued leave	30,969	25,056	56,025
Deferred revenue	8,622	-	8,622
Deposits	195	-	195
Total current liabilities	640,370	39,226	679,596
Noncurrent liabilities:			
Net pension/OPEB obligation	14,476	8,821	23,297
Landfill closure costs	-	564,571	564,571
Total noncurrent liabilities	14,476	573,392	587,868
Total liabilities	654,846	612,618	1,267,464
Net assets:			
Invested in capital assets	26,465,094	2,025,060	28,490,154
Unrestricted (deficit)	2,566,599	(510,410)	2,056,189
Total net assets	29,031,693	1,514,650	30,546,343
Total liabilities and net assets	$ 29,686,539	2,127,268	31,813,807

See accompanying notes to basic financial statements.

Exhibit D-2

CITY OF KOTZEBUE, ALASKA

Enterprise Funds

Statement of Revenues, Expenses and Changes in Net Assets

Year Ended June 30, 2008

	Major Funds		
	Water and Sewer Utility	Refuse	Total Enterprise Funds
Operating revenues:			
Water use charges and connect fees	$ 1,237,527	-	1,237,527
Sewer use charges and connect fees	550,605	-	550,605
Refuse and landfill	-	720,197	720,197
Penalties and interest	21,285	-	21,285
Total operating revenues	1,809,417	720,197	2,529,614
Operating expenses:			
Administration	368,906	172,992	541,898
Water	991,667	-	991,667
Sewer	437,297	-	437,297
Refuse and landfill	-	647,397	647,397
Depreciation	1,696,929	252,340	1,949,269
Total operating expenses	3,494,799	1,072,729	4,567,528
Loss from operations	(1,685,382)	(352,532)	(2,037,914)
Nonoperating revenues:			
Investment income	19,101	-	19,101
Equipment rental	9,750	-	9,750
Equipment sales	2,702	7,580	10,282
Miscellaneous revenue	100	500	600
Total nonoperating revenues	31,653	8,080	39,733
Loss before contributions	(1,653,729)	(344,452)	(1,998,181)
Capital contributions	3,071,088	-	3,071,088
Change in net assets	1,417,359	(344,452)	1,072,907
Net assets, beginning of year	27,614,334	1,859,102	29,473,436
Net assets, end of year	$ 29,031,693	1,514,650	30,546,343

See accompanying notes to basic financial statements.

Exhibit D-3

CITY OF KOTZEBUE, ALASKA

Enterprise Funds
Statement of Cash Flows
Year Ended June 30, 2008

	Major Funds		
	Water and Sewer Utility	Refuse	Total Enterprise Funds
Cash flows from operating activities:			
Receipts from customers and users	$ 1,822,887	720,467	2,543,354
Other miscellaneous receipts	12,552	8,080	20,632
Payments to suppliers	(594,077)	(215,949)	(810,026)
Payments to employees	(589,761)	(397,012)	(986,773)
Payments for interfund services used	(353,592)	(172,992)	(526,584)
Net cash flows from operating activities	298,009	(57,406)	240,603
Cash flows from capital and related financing activities:			
Acquisition and construction of capital assets	(3,071,088)	-	(3,071,088)
Capital contributions received	2,222,682	-	2,222,682
Net cash flows from capital and related financing activities	(848,406)	-	(848,406)
Cash flows from investing activities - investment income received	19,101	-	19,101
Net decrease in cash and investments	(531,296)	(57,406)	(588,702)
Cash and investments, beginning of year	2,393,655	80,003	2,473,658
Cash and investments, end of year	$ 1,862,359	22,597	1,884,956
Reconciliation of loss from operations to net cash provided (used) by operating activities:			
Loss from operations	(1,685,382)	(352,532)	(2,037,914)
Adjustments to reconcile loss from operations to net cash flows from operating activities:			
Miscellaneous nonoperating revenues	12,552	8,080	20,632
Depreciation	1,696,929	252,340	1,949,269
Decrease in assets - accounts receivable	6,111	270	6,381
Increase (decrease) in liabilities:			
Accounts payable	267,505	(2,330)	265,175
Accrued payroll and payroll liabilities	3,752	154	3,906
Accrued leave	(10,817)	(1,026)	(11,843)
Deposits	1	-	1
Deferred revenue	7,358	-	7,358
Landfill closure costs	-	37,638	37,638
Net cash flows from operating activities	$ 298,009	(57,406)	240,603

See accompanying notes to basic financial statements.

(1) Summary of Significant Accounting Policies

Reporting Entity

The City of Kotzebue was incorporated on October 14, 1958. The City operates under a Council-Manager form of government and provides a full range of services including public safety, streets, sanitation, water and sewer, health and social services, culture and recreation, public improvements, planning and zoning, and general administrative services.

The financial statements included in this report are for City of Kotzebue only. There are no other component units for which City of Kotzebue is financially accountable, nor do any special financial relationships exist between the City and any other entity.

The accounting policies of the City conform to generally accepted accounting principles as applicable to governments. The following is a summary of the more significant policies:

Government-Wide and Fund Financial Statements

The government-wide financial statements (i.e., the statement of net assets and the statement of activities) report information on all of the activities of the City. In general, the effect of interfund activity has been removed from these statements to minimize the double-counting of internal activities. *Governmental activities*, which normally are supported by taxes and intergovernmental revenues, are reported separately from *business-type activities,* which rely primarily on fees and charges to external parties.

The statement of activities demonstrates the degree to which the direct expenses of a given function or segment are offset by program revenues. *Direct expenses* are those that are clearly identifiable with a specific function or segment. *Program revenues* include 1) fees, fines and charges to customers or applicants who purchase, use, or directly benefit from goods, services, or privileges provided by a given function or segment and 2) grants and contributions that are restricted to meeting the operational or capital requirements of a particular function or segment. Taxes and other items not properly included among program revenues are reported instead as *general revenues.*

Separate financial statements are provided for governmental funds and proprietary funds. Major individual governmental funds and major individual enterprise funds are reported as separate columns in the fund financial statements.

Measurement Focus, Basis of Accounting, and Financial Statement Presentation

The government-wide and proprietary fund financial statements are reported using the economic resources measurement focus and the *accrual basis of accounting.* Revenues are recorded when earned and expenses are recorded when a liability is incurred, regardless of the timing of the related cash flows. Grants and similar items are recognized as revenue as soon as all eligibility requirements imposed by the provider have been met.

Summary of Significant Accounting Policies, continued

Measurement Focus, Basis of Accounting, and Financial Statement Presentation, continued

Governmental fund financial statements are reported using the current financial resources measurement focus and the *modified accrual basis of accounting*. Revenues are recognized as soon as they are both measurable and available. Revenues are considered to be *available* when they are collectible within the current period or soon enough thereafter to pay liabilities of the current period. For this purpose, the City considers all revenues except reimbursement grants to be available if they are collected within 60 days after year end. Reimbursement grants are considered available if they are collected within one year of the end of the current fiscal period. Expenditures generally are recorded when a liability is incurred, as under accrual accounting. However, debt service expenditures, as well as expenditures related to accrued leave are recorded only to the extent they have matured.

Sales taxes, licenses, and interest associated with the current fiscal period are all considered to be susceptible to accrual and so have been recognized as revenues of the current fiscal period. Most other revenue items are considered to be measurable and available only when cash is received by the government.

The City reports the following major funds:

Major governmental funds:

The *General Fund* is the City's primary operating fund. It accounts for all financial resources of the general government, except those required to be reported in another fund.

The *Gaming Special Revenue Fund* accounts for the operations of the gaming activities for the City of Kotzebue.

Major proprietary funds:

The *Water and Sewer Utility Enterprise Fund* is used to account for the operations of the City's water system and the waster water utility.

The *Refuse Enterprise Fund* is used to account for the operations of the City's solid waste and landfill activities.

Private-sector standards of accounting and financial reporting issued prior to December 1, 1989, generally are followed in both the government-wide and enterprise fund financial statements to the extent that those standards do not conflict with or contradict guidance of the Governmental Accounting Standards Board (GASB). Governments also have the option of following subsequent private-sector guidance for their business-type activities and enterprise funds, subject to the same limitation. The City has elected not to follow subsequent private-sector guidance.

Summary of Significant Accounting Policies, continued

Measurement Focus, Basis of Accounting, and Financial Statement Presentation, continued

As a general rule the effect of interfund activity has been eliminated from the government-wide financial statements. Exceptions to this general rule are allocated administration fees and charges between the enterprise funds and the various other funds and departments. Elimination of these charges would distort the direct costs and program revenues reported for the various functions concerned.

Amounts reported as *program revenues* include 1) charges to customers or applicants for goods, services, or privileges provided, 2) operating grants and contributions, and 3) capital grants and contributions. Internally dedicated resources are reported as *general revenues* rather than as program revenues. In addition, general revenues include all taxes, investment income, and State of Alaska entitlement revenues.

Proprietary funds distinguish *operating* revenues and expenses from *nonoperating* items. Operating revenues and expenses generally result from providing services and producing and delivering goods in connection with a proprietary fund's principal ongoing operations. The principal operating revenues of the Enterprise Funds are charges to customers for sales and services. Operating expenses for the Enterprise Funds include the costs of sales and services, administrative expenses and depreciation on capital assets. All revenues and expenses not meeting this definition are reported as nonoperating revenues and expenses.

When both restricted and unrestricted resources are available for use, it is the City's policy to use restricted resources first, then unrestricted resources as they are needed.

Cash and Cash Equivalents

For purposes of the statements of cash flows, the proprietary funds consider all cash accounts to be cash and cash equivalents. The central treasury, which holds cash and investments, is used essentially as a cash management pool by each fund.

Inventory

Inventories are valued at the lower of cost or market in the proprietary funds. Cost is determined by the first-in, first-out method. The cost is recorded as an expense at the time individual inventory items are consumed.

Receivables and Payables

Activity between funds that are representative of lending/borrowing arrangements outstanding at the end of the year are referred to as either "due to / from other funds" (i.e., the current portion of interfund loans) or "advances to / from other funds" (i.e., the noncurrent portion of interfund loans). All other outstanding balances between funds are reported as "due to / from other funds." Any residual balances outstanding between the governmental activities and business-type activities are reported in the government-wide financial statements as "internal balances."

Summary of Significant Accounting Policies, continued

Grants and Other Intergovernmental Revenues

In applying the measurable and available concepts to grants and intergovernmental revenues, the legal and contractual requirements of the numerous individual programs are used as guidance. There are, however, essentially two types of these revenues. In one, monies must be expended on the specific purpose or project before any amounts are considered "earned"; therefore, revenues are recognized based on expenditures recorded. In the other, monies are virtually unrestricted as to purpose of expenditure and are usually revocable only for failure to comply with prescribed compliance requirements. These resources are reflected as revenues at the time of receipt or earlier if the measurable and available criteria are met.

Interfund Transactions

During the course of normal operations, the City has numerous transactions between funds, including expenditures and transfers of resources to provide services, construct assets, and service debt. The accompanying financial statements generally reflect such transactions as transfers. Operating subsidies are also recorded as transfers.

Accrued Leave

All full-time employees are eligible for paid personal leave. Accrued leave is recorded as an expense in the government-wide and proprietary fund financial statements. A liability for these amounts is reported in the governmental fund financial statements only if they have matured (e.g. the employee has terminated employment).

Capital Assets

Capital assets, which include property, plant, and equipment, are reported in the applicable governmental or business-type activities columns in the government-wide financial statements. As a phase 3 government for GASB Statement 34 purposes, the City records additions to infrastructure capital assets (e.g. roads, sidewalks, etc.) prospectively from the GASB Statement 34 implementation date, which was June 30, 2003. Capital assets are defined by the City as assets with an initial, individual cost of more than $5,000 and an estimated useful life in excess of one year. Such assets are recorded at historical cost or estimated historical cost if purchased or constructed. Donated capital assets are recorded at estimated fair market value at the date of donation.

Major outlays for capital assets and improvements are capitalized as projects are constructed. Interest incurred during the construction phase of capital assets of business-type activities is included as part of the capitalized value of the assets constructed.

The costs of normal maintenance and repairs that do not add to the value of the asset or materially extend the useful life of the asset are not capitalized.

Summary of Significant Accounting Policies, continued

Capital Assets, continued

Property, plant, and equipment of the City is depreciated using the straight line method over the following estimated useful lives:

Buildings and improvements	25-40 years
Improvements other than buildings	10-25 years
Machinery and equipment	5-25 years

Long-Term Debt

In the government-wide and the proprietary fund financial statements, long-term debt and other long-term obligations are reported as liabilities in the applicable governmental activities, business-type activities, or proprietary fund type statement of net assets. Bond premiums and discounts, as well as issuance costs, are deferred and amortized over the life of the bonds using the straight-line method.

Fund Balances

In the fund financial statements, governmental funds report reservations of fund balance for amounts that are not available for appropriation or are legally restricted by outside parties for use for a specific purpose. Designations of fund balance represent tentative management plans that are subject to change.

Encumbrances

Encumbrance accounting, under which purchase orders, contracts and other commitments for expenditures are recorded in order to reserve that portion of the applicable appropriation, is employed as an extension of formal budgetary integration in the General Fund and Special Revenue Funds. Encumbrances outstanding at year end are reported as reservations of fund balances since they do not constitute expenditures or liabilities.

Deferred Grant Revenue

Amounts received from grantor agencies, which are restricted as to use and have not been expended for the intended use are shown as deferred revenue.

Pension Plan

All full-time permanent employees of the City participate in the Public Employees' Retirement System (PERS) administered by the State of Alaska.

Comparative Data

Comparative data for the prior year have been presented in some of the accompanying individual financial statements in order to provide an understanding of changes in the City's financial position and operations. Certain amounts in the prior year data have been reclassified to conform to the current year's presentation.

(2) **Cash and Investments**

The City of Kotzebue utilizes a central treasury that is available for use by all funds. Each fund's portion of the central treasury is displayed on the balance sheet as "Cash and investments", or is included in "Due to other funds."

Reconciliation of Deposit and Investment Balances

The following is a reconciliation of the City's deposit and investment balances to the financial statements at June 30, 2008.

Bank deposits	$ 963,260
Investments	2,468,393
	$ 3,431,653

Investments

Investment Policy

The City is authorized to invest in the following instruments. All securities purchased by the City and all other City investments must mature not later than the time indicated below, measured from the date of the City's investment transaction.

1. Obligations of, or obligations insured or guaranteed by the United States or an agency or instrumentality of the United States - three (3) years.

2. Certificates of deposit and other deposits at banks and savings and loans associations - three (3) years.

3. Federally insured deposits at banks and savings and loan associations - three (3) years.

4. Bonds and notes which are issued by a State or political subdivision thereof, or pursuant to the Tribal Tax Statutes Act 26 U.S.C. Sec. 7871 and which are rated AA or higher by a nationally recognized rating service - three (3) years.

5. Commercial paper issued by corporations and having the highest rating given by a nationally recognized rating service - two hundred seventy (270) days.

6. Bankers acceptances drawn on and accepted (a) at banks, all of whose debt issues are rated at least AA or its equivalent by a nationally recognized rating service or (b) if the bank is a subsidiary of one bank holding company, all of whose commercially held paper has the highest rating given by a nationally recognized rating service or whose debt issues meet the requirements in (a) above - one hundred eighty (180) days.

7. Money market mutual funds whose portfolio consists entirely of instruments - maturity date not applicable, which are U.S. government, or U.S. government guaranteed obligations, which have a constant net asset value.

Cash and Investments, continued

Investments, continued

Investment Policy, continued

8. Repurchase agreements, the securities underlying the agreement being any of the items listed in subsection 1 and 6 of this section which meet a margin requirement of 102%.

9. The Alaska Municipal League Investment Pool, made in accordance with terms of that Pool's "Common Investment Agreement."

Interest Rate Risk

Interest rate risk is the risk that changes in market interest rates will adversely affect the fair value of an investment. Generally, the longer the maturity of an investment, the greater the sensitivity of its fair value to changes in market interest rates.

Investment maturities in investments at June 30, 2008 are as follows:

		Investment Maturities (in Years)	
Investment Type	Fair Value	Less Than 1	1 - 5
Repurchase agreement	$ 764,417	764,417	-
Certificates of deposit	1,359,278	1,161,936	197,342
Total subject to interest rate risk	2,123,695	1,926,353	197,342
Pooled investments	344,698		
Total investments	$ 2,468,393		

Credit Risk

Generally, credit risk is the risk that an issuer of an investment will not fulfill its obligation to the holder of the investment. This is measured by the assignment of a rating by a nationally recognized statistical rating organization. The City does not have any investments subject to credit risk.

Pooled investments are invested with the Alaska Municipal League Investment Pool, Inc. (AMLIP). The AMLIP is an external investment pool which is not SEC registered and is not rated for credit risk purposes. Alaska Statute 37.23 establishes regulatory oversight of the Pool. The law sets forth numerous requirements regarding authorized investments and reporting. The share value of investments in the AMLIP is approximately equal to fair value.

(3) **Accounts Receivable and Valuation Allowance**

The City maintains accounts receivable balances of which a portion is reserved as an allowance for doubtful receivables. At June 30, 2008, receivables for the City's individual major funds and nonmajor funds in the aggregate, including applicable allowances for uncollectible accounts, are as follows:

	Major Governmental Fund General	Nonmajor Governmental Funds	Total Governmental Funds
Grants and shared revenues	$ 92,794	-	92,794
Sales tax	224,374	-	224,374
Other	161,082	-	161,082
Total receivables	$ 478,250	-	478,250

	Major Enterprise Funds		Total Enterprise Funds
	Water & Sewer	Refuse	
Accounts	$ 349,705	135,996	485,701
Grants	1,156,612	-	1,156,612
Total receivables	1,506,317	135,996	1,642,313
Less allowance for doubtful receivables	(147,231)	(56,385)	(203,616)
Net receivables	$ 1,359,086	79,611	1,438,697

Governmental funds report deferred revenue in connection with receivables for revenues that are not considered to be available to liquidate liabilities of the current period. Governmental funds also defer revenue recognition in connection with resources that have been received, but not yet earned. At June 30, 2008, the deferred revenue reported in the governmental funds was comprised of the following:

Delinquent sales taxes receivable (General Fund)	$ 58,575

(4) Capital Assets

Capital asset activity for the year ended June 30, 2008 follows:

	Balance July 1, 2007	Additions and Reclassifications	Deletions and Reclassifications	Balance June 30, 2008
Governmental activities				
Capital assets not being depreciated -				
Land and land improvements	$ 497,270	-	-	497,270
Capital assets being depreciated:				
Buildings	5,462,829	-	-	5,462,829
Machinery and equipment	1,962,666	17,089	-	1,979,755
Total assets being depreciated	7,425,495	17,089	-	7,442,584
Less accumulated depreciation for:				
Buildings	2,252,161	136,591	-	2,388,752
Machinery and equipment	1,241,675	134,489	-	1,376,164
Total accumulated depreciation	3,493,836	271,080	-	3,764,916
Total capital assets being depreciated, net	3,931,659	(253,991)	-	3,677,668
Governmental activity capital assets, net	$ 4,428,929	(253,991)	-	4,174,938
Business-type activities				
Capital assets not being depreciated:				
Land	$ 230,983	-	-	230,983
Construction in progress	630,983	1,788,050	-	2,419,033
Total assets not being depreciated	861,966	1,788,050	-	2,650,016
Capital assets being depreciated:				
Buildings	2,381,895	-	-	2,381,895
Improvements other than buildings	68,176,745	999,869	-	69,176,614
Machinery and equipment	1,874,647	283,169	-	2,157,816
Total assets being depreciated	72,433,287	1,283,038	-	73,716,325
Less accumulated depreciation for:				
Buildings	738,230	79,400	-	817,630
Improvements other than buildings	43,725,546	1,773,893	-	45,499,439
Machinery and equipment	1,463,142	95,976	-	1,559,118
Total accumulated depreciation	45,926,918	1,949,269	-	47,876,187
Total capital assets being depreciated, net	26,506,369	(666,231)	-	25,840,138
Business-type activity capital assets, net	$ 27,368,335	1,121,819	-	28,490,154

Capital Assets, continued

Depreciation expense was charged to the functions as follows:

Governmental activities	
General government	$ 23,292
Public safety	149,161
Public works	83,486
Adult Center operations	38,738
Total depreciation expense – governmental activities	294,677
Business-type activities	
Water and sewer utility	1,673,332
Refuse	252,340
Total depreciation expense – business-type activities	1,925,672
Total depreciation expense	$ 2,220,349

(5) **Interfund Receivables, Payables, and Transfers**

A schedule of interfund balances and transfers for the year ended June 30, 2008, follows:

Due from other funds:	
Due to the General Fund from the Gaming Special Revenue Fund to cover operating costs of the fund	$ 140,910
Due to the General Fund from nonmajor governmental funds for advances to cover capital costs	19,888
Total amount due from other funds	$ 160,798
Transfers:	
From General Fund to nonmajor governmental fund to cover capital costs	$ 1,622
From Gaming Special Revenue Fund to nonmajor governmental fund to cover operating costs	70,577
Total transfers to other funds	$ 72,199

(6) **Long-Term Debt**

The following is a summary of long-term debt transactions of the City for the year ended June 30, 2008:

Governmental activities	Balance July 1, 2007	Additions	Retired	Balance June 30, 2008	Due Within One Year
Accrued leave	$ 223,883	355,773	318,240	261,416	261,416
Net pension/OPEB obligation	103,001	-	-	103,001	-
Total governmental activities	$ 326,884	355,773	318,240	364,417	261,416

The long-term liabilities related to governmental activities are generally liquidated by the General Fund.

Business-type activities	Balance July 1, 2007	Additions	Retired	Balance June 30, 2008	Due Within One Year
Accrued leave	$ 67,868	88,080	99,923	56,025	56,025
Net pension/OPEB obligation	23,297	-	-	23,297	-
Total business-type activities	$ 91,165	88,080	99,923	79,322	56,025

(7) **Municipal Landfill Closure and Postclosure Liability**

State and federal laws and regulations require the City to place a final cover on its landfill site when it stops accepting waste and to perform certain maintenance and monitoring functions at the site for 30 years after closure. Although closure and postclosure care costs will be paid only near or after the date the landfill stops accepting waste, generally accepted accounting principles require that the City report a portion of these closure and postclosure care costs each period based on landfill capacity used as of each balance sheet date.

Municipal Landfill Closure and Postclosure Liability, continued

The City received approximately 20,000 cubic yards of free cover material during 2006 as a result of a State airport expansion project. The City also had 5,000 cubic yards of gravel stockpiled from prior years. With the above materials on hand, City management estimates the remaining future closure costs to be $752,761. Management also estimates that two of the three existing cells are approximately 100% full and the other cell is approximately 75% full, resulting in an estimated liability at June 30, 2008 of $564,571, an increase over the prior year of $37,638. The City will recognize the remaining estimated cost of the closure of $188,190 as the remaining expected usage is filled. These amounts are based on what it would cost to perform the closure in 2008. Actual costs may be higher due to inflation, changes in technology or changes in regulations. The remaining life of the cells currently being used is estimated to be approximately 5 years.

(8) **Defined Benefit Pension Plan**

The City participates in the Public Employees' Retirement System (PERS), an agent multiple employer plan which covers eligible State and local government employees. The plan was established and is administered by the State of Alaska to provide pension, postemployment healthcare, death, and disability benefits. Benefit and contribution provisions are established by State law and may be amended only by the State Legislature.

The plan is included in a comprehensive annual financial report that includes financial statements and other required supplemental information. The report is available at the following address:

Department of Administration
Division of Retirement and Benefits
P.O. Box 110203
Juneau, Alaska 99811-0203

Funding Policy

Employees are required to contribute 6.75% of their annual covered salary (1.86% for pension and 4.89% for healthcare). The funding policy provides for periodic employer contributions based on actuarially determined rates that, expressed as a percentage of annual covered payroll, are sufficient to accumulate sufficient assets to pay both pension and postemployment healthcare benefits when due.

The City's contribution rates for 2008 are as follows:

	Actuarial Rate
Pension	4.47%
Postemployment healthcare	11.80%
Total contribution rate	16.27%

Defined Benefit Pension Plan, continued

Funding Policy, continued

The employer contribution rate for the current year was actuarially calculated as a level percentage of payroll and was determined using the projected unit credit actuarial funding method. Unfunded accrued liabilities and future gains/losses are amortized over a fixed 25 year period as a level percentage of pay based on a 4.0% payroll growth assumption.

The current year required contribution was determined as part of the June 30, 2005 actuarial valuation. Effective with the June 30, 2006 valuation (which establishes the 2009 rates), the actuarial funding method has been changed to the Entry Age Actuarial Cost Method.

The projection of future benefits for an ongoing plan involves estimates of the value of reported amounts and assumptions about the probability of occurrence of events far into the future. Examples include assumptions about future employment, mortality, and the healthcare cost trend. Amounts determined regarding the funded status of the plan and the annual required contributions of the employer are subject to continual revision as actual results are compared with past expectations and new estimates are made about the future.

Projections of benefits are based on the substantive plan (the plan as understood by the employer and plan members) and include the types of benefits in force at the valuation date and the pattern of sharing benefit costs between the City and the plan members at that point. Actuarial calculations reflect a long-term perspective and employ methods and assumptions that are designed to reduce short-term volatility in actuarial accrued liabilities and the actuarial values of assets.

Projected benefits for financial reporting purposes do not incorporate any potential effects of legal or contractual funding limitations.

The significant actuarial assumptions used in the most recent valuation of the plan follow:

1. Investment return of 8.25% per annum, compounded annually, net of expenses;
2. Projected salary increases of 5.5% for the first ten years and 4.0% thereafter (Police and Fire 6.0% for the first five years and 4.5% thereafter);
3. Medical cost inflation of 9.5% for 2006, trending downward 0.5% per year to 5.0% in FY15 and remaining at 5.0% thereafter; and prescription cost inflation of 14% for 2006, trending downward 1.0% per year to 5.0% in FY15 and remaining at 5.0% thereafter;
4. Total inflation, as measured by the Consumer Price Index for urban and clerical workers for Anchorage, is assumed to increase 3.5% annually;
5. Mortality based on 1994 Group Annuity Mortality Basic Table, 1994 Base Year with 85% occupational for Peace Officer/Firefighter and 35% occupational for others;
6. Retirement rate based on 1997-1999 actual experience. Deferred vested members are assumed to retire at their earliest retirement date;

Defined Benefit Pension Plan, continued

Funding Policy, continued

7. Asset valuation – recognizes 20% of the investment gain or loss in each of the current and preceding four years. Assets are valued at market value and are accounted for on an accrual basis. Valuation assets are constrained to a range of 80% to 120% of market value of assets; and,
8. Valuation of Medical Benefit based on analysis of actual claims paid for July 2001 – June 2005, averaged and annualized and adjusted for other factors plus administrative costs.

Annual Pension and Postemployment Healthcare Cost

Effective July 1, 2007, the State of Alaska adopted contribution rates for each employer at an amount no less than 14.48% and no more than 22%. The actual rate for City of Kotzebue is 16.27%. The Legislature then approved state funding (Senate Bill 53) in the form of an on-behalf payment for those amounts between the established employer rate and the actuarially determined rate. This on-behalf payment was transferred to the Alaska Division of Retirement and Benefits at July 1, but was allocated to the individual employer accounts on a prorata basis with each payroll reporting period. The City did not receive the PERS relief as the contribution rate was the same as the actuarially required rate.

In addition, in fiscal year 2008, the State of Alaska passed legislation (Senate Bill 123) which requires that the employer contribution be calculated on all PERS eligible wages, including wages attributable to the defined contribution plan described later in these footnotes.

For the year ended June 30, 2008, the City's annual pension and other post-employment benefit (OPEB) costs were as follows:

	Pension	OPEB	Total
Annual required contribution	$ 67,660	178,378	246,038
Interest on net pension obligation	2,865	7,555	10,420
Adjustment to annual required contribution	(2,257)	(5,951)	(8,208)
Annual pension/OPEB cost	68,268	179,982	248,250
Contributions made	68,268	179,982	248,250
Increase in net pension/OPEB obligation	-	-	-
Net pension/OPEB obligation, beginning of year	147,613	(21,315)	126,298
Net pension/OPEB obligation (asset), end of year	$ 147,613	(21,315)	126,298

Defined Benefit Pension Plan, continued

Annual Pension and Postemployment Healthcare Cost, continued

Three-year trend information for PERS follows:

	Year Ending June 30,	Annual Pension Cost (APC)	Actual Contributions	Percentage of APC Contributed	Net Pension Obligation
Pension	2006	$ 211,336	$ 200,210	95%	$ 181,784
	2007	226,018	260,189	115%	147,613
	2008	68,268	68,268	100%	147,613

	Year Ending June 30,	Annual OPEB Cost	Actual Contributions	Percentage of OPEB Contributed	Net OPEB Obligation (Asset)
Postemployment healthcare	2006	$ 138,854	$ 133,808	96%	$ 5,046
	2007	157,156	183,517	117%	(21,315)
	2008	179,982	179,982	100%	(21,315)

Funding Progress

The following schedule of funding progress presents multiyear trend information about whether the actuarial value of plan assets is increasing or decreasing over time relative to the actuarial accrued liabilities for benefits.

Actuarial Valuation Date	Actuarial Value of Assets	Actuarial Accrued Liability	Unfunded (Assets in Excess of) Liability	Funded Ratio	Covered Payroll	Unfunded (Assets in Excess of) Liability as Percentage of Covered Payroll
June 30, 2004:						
Pension	$ 6,934,000	$ 6,438,000	$ (496,000)	108%	$ 2,814,000	(18%)
Postemployment healthcare	4,889,000	4,540,000	(349,000)	108%	2,814,000	(12%)
June 30, 2005:						
Pension	6,821,248	7,753,733	532,485	93%	3,261,769	16%
Postemployment healthcare	6,098,976	6,575,078	476,102	93%	3,261,769	15%
June 30, 2006:						
Pension	10,312,215	9,524,222	(787,993)	108%	3,226,643	(24%)
Postemployment healthcare	4,413,868	7,788,756	3,374,888	57%	3,226,643	105%

Defined Benefit Pension Plan, continued

PERS Conversion to Cost Sharing

In April 2008, the Alaska Legislature passed Senate Bill 125 which converts the existing Public Employees Retirement System (PERS) from an agent-multiple employer plan to a cost-sharing plan. Under the cost-sharing arrangement, the State of Alaska Division of Retirement and Benefits will no longer track individual employer assets and liabilities. Rather, all plan costs and past service liabilities will be shared among all participating employers. The cost-sharing plan will require a uniform employer contribution rate of 22% or less of active member wages, subject to a wage floor. In addition, the legislation provides for state contributions in the event that the annually calculated and board adopted rate, which includes a provision to pay down the past-service liability, exceeds 22%. Any such additional contributions would be recognized by each employer as an on-behalf payment.

As a result of this change, the City will not be obligated to pay or to continue amortizing the currently recorded Net Pension/OPEB obligation. As such, these liabilities will be written off and the City will recognize an extraordinary gain on the legislation's effective date, July 1, 2008.

(9) **Defined Contribution Pension Plan**

The State of Alaska Legislature approved Senate Bill 141 to create the Public Employees' Retirement System (PERS) Tier IV for employees hired after July 1, 2006 or for employees converting from the PERS Tier I, II or III defined benefit plans. The plan is administered by the State of Alaska, Department of Administration Commissioner, and benefit and contribution provisions are established by State law and may be amended only by the State Legislature. The Alaska Retirement Management Board may also amend contribution requirements. Included in the plan are individual pension accounts, retiree medical insurance plan and a separate Health Reimbursement Arrangement account that will help retired members pay medical premiums and other eligible medical expenses not covered by the medical plan. Employees are required to contribute 8.0% of their annual covered salary and the City is required to make the following contributions:

Individual account	5.00 %
Health reimbursement arrangement (HRA) *	3.00
Retiree medical plan	1.75
Occupational death and disability benefits	.30
	10.05 %

*Health Reimbursement Arrangement – AS 39.30.370 requires that the employer contribute "an amount equal to three percent of the employer's average annual employee compensation." For actual remittance, this amount is calculated as a flat rate for each full time or part-time employee per pay period.

The City and employee contributions to PERS including the HRA contribution for the year ended June 30, 2008 were $44,439 and $36,508, respectively.

(10) **Deferred Compensation Plan**

The City offers its employees a deferred compensation plan created in accordance with Internal Revenue Code Section 457. The plan, available to all full-time employees, permits them to defer a portion of their salary until future years. The deferred compensation is not available to employees until termination, retirement, death, or unforeseeable emergency. In accordance with the Internal Revenue Code, all assets and income of the plan are held in trust for the exclusive benefit of participants and their beneficiaries.

(11) **Risk Management**

The City faces a considerable number of risks of loss, including (a) damage to and loss of property and contents, (b) employee torts, (c) professional liability; i.e., errors and omissions, (d) environmental damage, (e) workers' compensation; i.e., employee injuries, and (f) medical insurance costs of employees. Commercial policies, transferring the risk of loss, except for relatively small deductible amounts, are purchased for employee medical costs. The City participates in the Alaska Municipal League Joint Insurance Association (AML/JIA) which provides insurance coverage for property and contents damage, torts, general and automobile liability, and workers' compensation. The City has no coverage for potential losses from environmental pollution damages. The AML/JIA is a public entity risk pool organized to share risks among its members. The Association's bylaws provide for the assessment of supplemental contributions from members in the event that losses and expenses for any coverage year exceed the annual contributions and income earned on such contributions for the year. Such supplemental contributions shall be based upon each member's annual deposit contribution in comparison to the aggregate annual deposit contributions of all members. The Association made no supplemental assessments during the year ended June 30, 2008. Coverage limits and the deductibles on the policies have stayed relatively constant for the last several years.

(12) **Contingencies**

Grants

Amounts received or receivable from granting agencies are subject to audit and adjustment by the granting agency. Any disallowed grant expenditures, including amounts already collected, would become a liability of the City.

The City, in the normal course of its activities, is involved in various claims and litigation. In the opinion of management and the City's legal counsel, the disposition of these matters is not expected to have a material adverse effect on the City's financial statements.

Exhibit E-1

CITY OF KOTZEBUE, ALASKA
Nonmajor Governmental Funds
Combining Balance Sheet
June 30, 2008

	Special Revenue Fund	Capital Project Funds		
Assets	Adult Center	City Match	ANTHC Projects	Total Nonmajor Governmental Funds
Cash and investments	$ 3,894	29,237	-	33,131
Liabilities and Fund Balances				
Liabilities:				
Accounts payable	640	-	185	825
Accrued payroll and payroll liabilities	3,254	-	-	3,254
Due to other funds	-	-	19,888	19,888
Total liabilities	3,894	-	20,073	23,967
Fund balances (deficits) - unreserved	-	29,237	(20,073)	9,164
Total liabilities and fund balances	$ 3,894	29,237	-	33,131

Exhibit E-2

CITY OF KOTZEBUE, ALASKA

Nonmajor Governmental Funds
Combining Statement of Revenues, Expenditures and
Changes in Fund Balances (Deficits)
Year Ended June 30, 2008

	Special Revenue Fund	Capital Project Funds				
	Adult Center	Community Facilities and Equipment FY02	Community Facilities and Equipment FY03	City Match	ANTHC Projects	Total Nonmajor Governmental Funds
Revenues:						
Adult Center	$ 74,535	-	-	-	-	74,535
State of Alaska	-	856	-	-	-	856
Federal government	-	-	-	-	264,604	264,604
Other	-	-	-	29,237	-	29,237
Total revenues	74,535	856	-	29,237	264,604	369,232
Expenditures:						
Adult Center operations	145,112	-	-	-	-	145,112
Capital outlay	-	3,584	-	-	283,892	287,476
Total expenditures	145,112	3,584	-	-	283,892	432,588
Excess of revenues over (under) expenditures	(70,577)	(2,728)	-	29,237	(19,288)	(63,356)
Other financing sources - transfers in	70,577	803	819	-	-	72,199
Net change in fund balances	-	(1,925)	819	29,237	(19,288)	8,843
Fund balances (deficits), beginning of year	-	1,925	(819)	-	(785)	321
Fund balances (deficit), end of year	$ -	-	-	29,237	(20,073)	9,164

GENERAL FUND

The General Fund accounts for the financial operations of City of Kotzebue which are not accounted for in any other fund. Principal sources of revenues are intergovernmental revenues, charges for services, and sales tax. Primary expenditures in the General Fund are for general government, public safety and public works.

Exhibit F-1

CITY OF KOTZEBUE, ALASKA
General Fund
Balance Sheet
June 30, 2008
(With Comparative Amounts for 2007)

Assets	2008	2007
Cash and investments	$ 1,269,959	1,309,320
Receivables:		
Grants and shared revenues	92,794	16,532
Sales tax	224,374	209,850
Other	161,082	115,126
Total receivables	478,250	341,508
Due from other funds	160,798	133,775
Total assets	$ 1,909,007	1,784,603
Liabilities and Fund Balance		
Liabilities:		
Accounts payable	73,202	66,384
Accrued payroll and payroll liabilities	185,741	154,729
Deferred revenue	58,575	54,065
Total liabilities	317,518	275,178
Fund balance:		
Reserved for encumbrances	15,727	6,165
Unreserved:		
Designated for subsequent year's expenditures	163,186	-
Undesignated	1,412,576	1,503,260
Total fund balance	1,591,489	1,509,425
Total liabilities and fund balance	$ 1,909,007	1,784,603

Exhibit F-2

CITY OF KOTZEBUE, ALASKA
General Fund
Schedule of Revenues, Expenditures, and Changes in
Fund Balance - Budget and Actual
Year Ended June 30, 2008
(With Comparative Amounts for 2007)

	2008			2007
	Budget	Actual	Variance Positive (Negative)	Actual
Revenues:				
Taxes:				
Sales tax	$ 2,967,000	2,896,490	(70,510)	2,790,337
Hotel and bed tax	43,000	48,362	5,362	38,432
Alcohol use tax	43,200	38,084	(5,116)	44,903
Penalties and interest	19,000	13,541	(5,459)	6,417
Total taxes	3,072,200	2,996,477	(75,723)	2,880,089
Intergovernmental:				
Federal government:				
Local law enforcement grants	215,000	62,519	(152,481)	57,931
Asset forfeitures	40,000	37,112	(2,888)	33,386
Total federal government	255,000	99,631	(155,369)	91,317
State of Alaska:				
Public safety training grant	3,000	-	(3,000)	2,500
Jail contract	880,000	879,929	(71)	879,929
Telephone and electric	70,000	69,016	(984)	69,452
PERS rebate	-	259,496	259,496	141,126
Municipal energy assistance	220,821	220,821	-	95,884
Total State of Alaska	1,173,821	1,429,262	255,441	1,188,891
Total intergovernmental	1,428,821	1,528,893	100,072	1,280,208
Charges for services:				
Administration fees	525,000	545,976	20,976	524,994
Ambulance services	250,000	258,226	8,226	301,114
Total charges for services	775,000	804,202	29,202	826,108
Investment income	90,000	115,292	25,292	113,411
Land sales	-	-	-	35,000

CITY OF KOTZEBUE, ALASKA
General Fund
Schedule of Revenues, Expenditures and Changes in
Fund Balance - Budget and Actual, continued

	2008			2007
	Budget	Actual	Variance Positive (Negative)	Actual
Revenues, continued:				
Other revenues:				
Permits, licenses and fines	$ 11,300	11,150	(150)	11,180
Community activities	7,000	14,815	7,815	4,325
Other rentals and leases	12,000	12,382	382	12,382
Alarms monitoring	18,500	14,350	(4,150)	24,350
Other	30,550	20,011	(10,539)	31,450
Total other revenues	79,350	72,708	(6,642)	83,687
Total revenues	5,445,371	5,517,572	72,201	5,218,503
Expenditures:				
General government:				
City council and clerk:				
Personnel	121,860	107,360	14,500	101,094
Books and publications	1,500	867	633	-
Supplies	300	165	135	785
Other services and charges	3,100	2,408	692	1,783
Telephone	1,600	1,452	148	1,503
Travel and per diem	21,000	19,146	1,854	22,763
Training	1,500	1,500	-	600
Dues and memberships	4,100	3,781	319	4,120
Insurance	5,700	5,707	(7)	4,113
Advertising	2,000	1,508	492	3,493
Total City council and clerk	162,660	143,894	18,766	140,254
Administration:				
Personnel	636,285	566,766	69,519	540,413
Electricity	8,000	7,775	225	7,643
Heating fuel	9,000	8,482	518	7,826
Books and publications	500	151	349	1,910
Supplies	16,000	15,656	344	14,088
Other services and charges	8,159	6,710	1,449	4,858
Telephone	11,500	12,383	(883)	10,712
Travel and per diem	24,000	22,839	1,161	21,002
Training	1,750	1,580	170	1,047
Ambulance 3rd party billing fees	24,000	15,283	8,717	23,745

CITY OF KOTZEBUE, ALASKA

General Fund

Schedule of Revenues, Expenditures and Changes in Fund Balance - Budget and Actual, continued

	2008			2007
	Budget	Actual	Variance Positive (Negative)	Actual
Expenditures, continued:				
General government, continued:				
Administration, continued:				
Dues and memberships	$ 1,000	375	625	620
Postage	10,000	9,850	150	5,199
Other consulting	7,900	7,263	637	17,110
Auditing and accounting	26,500	26,485	15	24,225
Legal	131,000	131,596	(596)	120,931
Insurance	35,000	34,960	40	25,790
Lobbying	110,000	104,336	5,664	113,175
Repairs and maintenance	50,100	51,138	(1,038)	22,462
Equipment and capital outlay	11,560	13,442	(1,882)	6,846
Total administration	1,122,254	1,037,070	85,184	969,602
Total general government	1,284,914	1,180,964	103,950	1,109,856
Public safety:				
Police:				
Personnel	811,018	776,658	34,360	728,302
Electricity	6,000	6,294	(294)	5,933
Forfeiture funds	47,000	19,688	27,312	3,587
Heating fuel	4,500	4,532	(32)	3,922
Clothing	3,500	2,605	895	2,746
Supplies	15,000	11,387	3,613	22,906
Other services and charges	1,000	1,039	(39)	4,115
Telephone	10,500	10,475	25	9,275
Travel and per diem	8,000	7,799	201	18,436
Training	2,500	1,965	535	1,300
Dues and memberships	750	250	500	910
Consulting	1,500	1,065	435	1,133
Insurance	59,508	59,508	-	44,825
Advertising	1,000	710	290	800
Repairs and maintenance	49,500	37,379	12,121	32,880
Equipment and capital outlay	4,634	3,328	1,306	5,450
Animal control	1,500	1,471	29	1,955
Total police	1,027,410	946,153	81,257	888,475

CITY OF KOTZEBUE, ALASKA
General Fund
Schedule of Revenues, Expenditures and Changes in
Fund Balance - Budget and Actual, continued

	2008			2007
	Budget	Actual	Variance Positive (Negative)	Actual
Expenditures, continued:				
Public safety, continued:				
Jail:				
Personnel	$ 741,528	707,828	33,700	697,655
Electricity	10,500	10,691	(191)	10,510
Heating fuel	40,000	48,294	(8,294)	47,682
Supplies	61,300	70,014	(8,714)	63,336
Other services and charges	1,000	701	299	361
Clothing	4,500	2,543	1,957	4,504
Telephone	5,000	5,443	(443)	3,935
Travel and per diem	8,500	5,382	3,118	5,431
Training	1,000	580	420	425
Television	302	236	66	236
Dues and memberships	1,000	492	508	926
Consulting	4,500	1,920	2,580	1,718
Insurance	55,000	54,788	212	42,064
Repairs and maintenance	17,000	12,112	4,888	16,499
Equipment and capital outlay	2,000	1,281	719	7,151
Total jail	953,130	922,305	30,825	902,433
Fire and emergency medical services:				
Personnel	515,726	566,063	(50,337)	497,226
Electricity	8,000	7,965	35	8,602
Heating fuel	47,000	43,570	3,430	44,165
Supplies	3,500	2,363	1,137	3,404
Other services and charges	700	131	569	357
Clothing	2,000	1,547	453	4,121
Telephone	4,000	3,495	505	4,981
Travel and per diem	4,500	3,135	1,365	6,162
Training	3,000	952	2,048	3,300
Insurance	38,000	37,780	220	33,645
Repairs and maintenance	20,000	18,112	1,888	14,883
Equipment and capital outlay	4,403	4,242	161	4,931
Total fire and emergency medical services	650,829	689,355	(38,526)	625,777
Total public safety	2,631,369	2,557,813	73,556	2,416,685

CITY OF KOTZEBUE, ALASKA
General Fund
Schedule of Revenues, Expenditures and Changes in
Fund Balance - Budget and Actual, continued

	2008			2007
	Budget	Actual	Variance Positive (Negative)	Actual
Expenditures, continued:				
Public works:				
Public works:				
Personnel	$ 890,703	843,388	47,315	810,072
Street lighting	29,000	25,588	3,412	26,554
Electricity	13,000	13,260	(260)	11,094
Heating fuel	95,000	90,615	4,385	95,672
Supplies	6,000	3,534	2,466	7,769
Other services and charges	500	610	(110)	2,046
Sign replacement	1,000	2,482	(1,482)	372
Clothing	2,000	1,932	68	994
Telephone	6,000	5,857	143	4,655
Travel and per diem	6,000	4,775	1,225	4,026
Training	3,000	1,050	1,950	3,779
Dues and memberships	500	10	490	10
Professional services	4,200	4,200	-	-
Insurance	56,312	56,312	-	48,667
Repairs and maintenance	201,300	171,380	29,920	243,385
Gravel	15,000	7,350	7,650	11,455
Equipment and capital outlay	9,781	6,610	3,171	7,588
Total public works	1,339,296	1,238,953	100,343	1,278,138
Capital projects:				
Personnel	215,571	192,893	22,678	202,287
Supplies	4,000	3,459	541	2,836
Other services and charges	500	541	(41)	2,997
Telephone	750	800	(50)	575
Travel and per diem	5,000	2,650	2,350	4,457
Training	2,000	-	2,000	469
Professional services	4,000	3,588	412	6,835
Insurance	9,400	9,401	(1)	8,095
Repairs and maintenance	5,500	2,941	2,559	1,518
Equipment and capital outlay	1,781	604	1,177	-
Total capital projects	248,502	216,877	31,625	230,069
Total public works	1,587,798	1,455,830	131,968	1,508,207

CITY OF KOTZEBUE, ALASKA
General Fund
Schedule of Revenues, Expenditures and Changes in
Fund Balance - Budget and Actual, continued

	2008			2007
	Budget	Actual	Variance Positive (Negative)	Actual
Expenditures, continued:				
Community services:				
Community activities	$ 33,000	26,834	6,166	29,532
4th of July expense	9,000	10,525	(1,525)	5,369
Heating fuel - Recreation Center	45,000	39,697	5,303	34,892
Total community services	87,000	77,056	9,944	69,793
Nondepartmental:				
EMS system	-	-	-	25,000
Honda four wheeler	-	-	-	1,500
Cape Blossom road project	-	-	-	59,870
Police vehicle	-	-	-	10,435
Public safety truck	-	-	-	12,770
Angle sweeper	-	-	-	9,037
Employee benefits	118,000	29,962	88,038	-
Accounting software	123,260	61,990	61,270	-
Hazmat training	120,000	40,000	80,000	-
Park and pool tables	-	13,182	(13,182)	-
Elder lots fence	-	17,089	(17,089)	-
Total nondepartmental	361,260	162,223	199,037	118,612
Debt service:				
Principal	-	-	-	62,679
Interest	-	-	-	627
Total debt service	-	-	-	63,306
Total expenditures	5,952,341	5,433,886	518,455	5,286,459
Excess of revenues over (under) expenditures	(506,970)	83,686	590,656	(67,956)
Other financing uses - transfers out	(12,691)	(1,622)	11,069	-
Net change in fund balance	$ (519,661)	82,064	601,725	(67,956)
Fund balance, beginning of year		1,509,425		1,577,381
Fund balance, end of year		$ 1,591,489		1,509,425

SPECIAL REVENUE FUNDS

These funds account for revenues from specific sources that are designated to finance particular functions and activities.

Gaming - This fund accounts for the bingo and pulltab gaming activities.

Adult Center - This fund accounts for the activities of the Adult Center located in the Recreation Center building.

Exhibit G-1

CITY OF KOTZEBUE, ALASKA
Gaming Special Revenue Fund
Schedule of Revenues, Expenditures and
Changes in Fund Balance - Budget and Actual
Year Ended June 30, 2008
(With Comparative Amounts for 2007)

	2008			2007
	Budget	Actual	Variance Positive (Negative)	Actual
Revenues:				
Bingo and pull tabs	$ 1,297,000	1,351,548	54,548	1,237,129
Other	1,050	-	(1,050)	206
Total revenues	1,298,050	1,351,548	53,498	1,237,335
Expenditures:				
Personnel	141,508	140,183	1,325	163,936
Rent	29,300	30,250	(950)	28,600
Supplies	29,900	28,963	937	27,512
Payouts to winners	948,153	954,901	(6,748)	874,403
Donations	50,000	50,000	-	50,000
Allocated administration	18,200	19,392	(1,192)	18,198
Other	16,510	16,485	25	12,716
Total expenditures	1,233,571	1,240,174	(6,603)	1,175,365
Excess of revenues over expenditures	64,479	111,374	46,895	61,970
Other financing uses - transfers out	(77,170)	(70,577)	6,593	(79,967)
Net change in fund balance	$ (12,691)	40,797	53,488	(17,997)
Fund balance, beginning of year		50,927		68,924
Fund balance, end of year		$ 91,724		50,927

Exhibit G-2

CITY OF KOTZEBUE, ALASKA
Adult Center Special Revenue Fund
Schedule of Revenues, Expenditures and
Changes in Fund Balance - Budget and Actual
Year Ended June 30, 2008
(With Comparative Amounts for 2007)

	2008			2007
	Budget	Actual	Variance Positive (Negative)	Actual
Revenues:				
Memberships	$ 11,500	12,432	932	11,608
Food and beverages	27,100	27,086	(14)	23,501
Rent	28,600	30,250	1,650	28,600
Special events	4,150	4,767	617	2,420
Total revenues	71,350	74,535	3,185	66,129
Expenditures:				
Personnel	77,120	76,264	856	81,361
Utilities	26,500	25,267	1,233	30,915
Supplies	22,650	21,895	755	20,544
Other services and charges	4,500	1,978	2,522	1,591
Insurance	8,400	8,332	68	7,635
Repairs and maintenance	9,350	11,376	(2,026)	4,050
Total expenditures	148,520	145,112	3,408	146,096
Excess of revenues over (under) expenditures	(77,170)	(70,577)	6,593	(79,967)
Other financing sources - transfers in	77,170	70,577	(6,593)	79,967
Net change in fund balance	$ -	-	-	-
Fund balance, beginning of year		-		-
Fund balance, end of year		$ -		-

ENTERPRISE FUNDS

Enterprise Funds account for operations that are financed and operated in a manner similar to private business operations.

Water and Sewer Utility - This fund accounts for the operations of the water and sewer system.

Refuse - This fund accounts for the operations of the refuse collection service, baler and balefill.

Exhibit H-1

CITY OF KOTZEBUE, ALASKA
Water and Sewer Utility Enterprise Fund
Statement of Net Assets
June 30, 2008
(With Comparative Amounts for 2007)

Assets	2008	2007
Current assets:		
Cash and investments	$ 1,862,359	2,393,655
Receivables:		
Accounts	349,705	355,816
Allowance for doubtful receivables	(147,231)	(147,231)
Grants	1,156,612	308,206
Net receivables	1,359,086	516,791
Total current assets	3,221,445	2,910,446
Property, plant, and equipment:		
Improvements other than buildings	67,076,481	66,076,612
Machinery and equipment	1,231,840	948,671
Construction in progress	2,419,033	630,983
Total property, plant, and equipment	70,727,354	67,656,266
Accumulated depreciation	(44,262,260)	(42,565,331)
Net property, plant, and equipment	26,465,094	25,090,935
Total assets	$ 29,686,539	28,001,381

Liabilities and Net Assets		
Liabilities:		
Current liabilities:		
Accounts payable	576,978	309,473
Accrued payroll and payroll liabilities	23,606	19,854
Accrued leave	30,969	41,786
Deferred revenue	8,622	1,264
Deposits	195	194
Total current liabilities	640,370	372,571
Net pension/OPEB obligation	14,476	14,476
Total liabilities	654,846	387,047
Net assets:		
Invested in capital assets	26,465,094	25,090,935
Unrestricted	2,566,599	2,523,399
Total net assets	29,031,693	27,614,334
Total liabilities and net assets	$ 29,686,539	28,001,381

Exhibit H-2

CITY OF KOTZEBUE, ALASKA
Water and Sewer Utility Enterprise Fund
Statement of Revenues, Expenses and Changes in Net Assets
Year Ended June 30, 2008
(With Comparative Amounts for 2007)

	2008	2007
Operating revenues:		
Water use charges and connect fees	$ 1,237,527	1,241,728
Sewer use charges and connect fees	550,605	537,363
Penalties and interest	21,285	21,310
Total operating revenues	1,809,417	1,800,401
Operating expenses:		
Administration:		
Postage	1,037	1,348
Credit card charges	14,277	14,841
Allocated administrative fees	353,592	338,298
Total administration	368,906	354,487
Water:		
Personnel	316,433	298,009
Electricity	116,488	123,914
Heating fuel	303,948	273,092
Building maintenance	345	9,984
Supplies	156,324	194,933
Telephone	7,209	5,816
Travel	1,461	3,736
Training	545	1,860
Professional services	43,563	30,324
Insurance	37,955	36,087
Repairs and maintenance	6,868	6,100
Equipment and capital outlay	-	1,186
Other	528	1,846
Total water	991,667	986,887

CITY OF KOTZEBUE, ALASKA
Water and Sewer Utility Enterprise Fund
Statement of Revenues, Expenses and Changes in Net Assets, continued

		2008	2007
Operating expenses, continued:			
Sewer:			
Personnel	$	266,263	267,301
Electricity		51,050	49,421
Supplies		46,603	63,200
Travel		2,068	1,182
Training		130	780
Professional services		5,300	33,300
Insurance		24,251	19,272
Repairs and maintenance		40,955	52,897
Other		677	1,181
Total sewer		437,297	488,534
Depreciation		1,696,929	1,422,324
Bad debt expense		-	28,923
Total operating expenses		3,494,799	3,281,155
Loss from operations		(1,685,382)	(1,480,754)
Nonoperating revenues:			
Investment income		19,101	49,768
Equipment rental		9,750	20,550
Equipment sales		2,702	1,914
State PERS relief		-	19,638
Miscellaneous revenue		100	1,854
Total nonoperating revenues		31,653	93,724
Loss before contributions		(1,653,729)	(1,387,030)
Capital contributions		3,071,088	4,873,819
Change in net assets		1,417,359	3,486,789
Net assets, beginning of year		27,614,334	24,127,545
Net assets, end of year	$	29,031,693	27,614,334

Exhibit H-3

CITY OF KOTZEBUE, ALASKA

Water and Sewer Utility Enterprise Fund
Statement of Cash Flows
Year Ended June 30, 2008
(With Comparative Amounts for 2007)

	2008	2007
Cash flows from operating activities:		
Receipts from customers and users	$ 1,822,887	1,755,094
Other miscellaneous receipts	12,552	24,318
Payments to suppliers	(594,077)	(1,141,731)
Payments to employees	(589,761)	(544,632)
Payments for interfund services used	(353,592)	(338,298)
Net cash flows from operating activities	298,009	(245,249)
Cash flows from capital and related financing activities:		
Acquisition and construction of capital assets	(3,071,088)	(4,873,818)
Capital contributions received	2,222,682	5,259,078
Net cash flows from capital and related financing activities	(848,406)	385,260
Cash flows from investing activities - investment income received	19,101	49,768
Net increase (decrease) in cash and investments	(531,296)	189,779
Cash and investments, beginning of year	2,393,655	2,203,876
Cash and investments, end of year	$ 1,862,359	2,393,655
Reconciliation of loss from operations to net cash provided (used) by operating activities:		
Loss from operations	(1,685,382)	(1,480,754)
Adjustments to reconcile loss from operations to net cash flows from operating activities:		
Miscellaneous nonoperating revenues	12,552	24,318
Noncash expense - PERS relief	-	19,638
Decrease in allowance for doubtful accounts	-	(6,792)
Depreciation	1,696,929	1,422,324
(Increase) decrease in assets - accounts receivable	6,111	(10,053)
Increase (decrease) in liabilities:		
Accounts payable	267,505	(215,431)
Accrued payroll and payroll liabilities	3,752	-
Accrued leave	(10,817)	8,038
Deposits	1	(83)
Net pension/OPEB obligation	-	(6,998)
Deferred revenue	7,358	544
Net cash flows from operating activities	$ 298,009	(245,249)

Exhibit H-4

CITY OF KOTZEBUE, ALASKA
Water and Sewer Utility Enterprise Fund
Combining Schedule of Water and Sewer Capital Projects
Year Ended June 30, 2008

		Sewage Lagoon Upgrade	2005 Sanitation Utilities Development	2007 Sanitation Utilities Development	Totals
Funding sources:					
Federal government	$	1,356	749,902	1,552,058	2,303,316
State of Alaska		452	249,967	517,353	767,772
Total funding sources	$	1,808	999,869	2,069,411	3,071,088
Expenditures - capital outlay	$	1,808	999,869	2,069,411	3,071,088

Exhibit H-5

CITY OF KOTZEBUE, ALASKA

Refuse Enterprise Fund
Statement of Net Assets
June 30, 2008
(With Comparative Amounts for 2007)

Assets	2008	2007
Current assets:		
Cash and investments	$ 22,597	80,003
Receivables:		
Accounts	135,996	136,266
Allowance for doubtful accounts	(56,385)	(56,385)
Net receivables	79,611	79,881
Total current assets	102,208	159,884
Property, plant, and equipment:		
Land	230,983	230,983
Buildings	2,381,895	2,381,895
Improvements other than buildings	2,100,133	2,100,133
Machinery and equipment	925,976	925,976
Total property, plant, and equipment	5,638,987	5,638,987
Accumulated depreciation	(3,613,927)	(3,361,587)
Net property, plant and equipment	2,025,060	2,277,400
Total assets	$ 2,127,268	2,437,284
Liabilities and Net Assets		
Liabilities:		
Current liabilities:		
Accounts payable	2,409	4,739
Accrued payroll and payroll liabilities	11,761	11,607
Accrued leave	25,056	26,082
Total current liabilities	39,226	42,428
Noncurrent liabilities:		
Landfill closure costs	564,571	526,933
Net pension/OPEB obligation	8,821	8,821
Total liabilities	612,618	578,182
Net assets:		
Invested in capital assets	2,025,060	2,277,400
Unrestricted (deficit)	(510,410)	(418,298)
Total net assets	1,514,650	1,859,102
Total liabilities and net assets	$ 2,127,268	2,437,284

Exhibit H-6

CITY OF KOTZEBUE, ALASKA
Refuse Enterprise Fund
Statement of Revenues, Expenses and Changes in Net Assets
Year Ended June 30, 2008
(With Comparative Amounts for 2007)

	2008	2007
Operating revenues - refuse collection services	$ 720,197	698,100
Operating expenses:		
Personnel	396,140	345,703
Electricity	18,997	16,097
Heating fuel	44,480	47,327
Gas and oil	20,841	17,987
Building maintenance	11,855	3,952
Supplies	43,481	54,351
Telephone	1,909	1,918
Professional fees	2,076	2,076
Insurance	24,864	21,724
Training	250	1,768
Repairs and maintenance	29,430	22,079
Allocated administrative fees	172,992	168,498
Clothing/safety equipment	3,109	3,715
Spring cleanup	4,696	2,623
Small tools	2,617	758
Lab testing/monitoring	98	132
Bad debt expense	-	11,077
Equipment rental	4,375	-
Closure costs	37,638	37,638
Depreciation	252,340	343,155
Miscellaneous	541	1,118
Total operating expenses	1,072,729	1,103,696
Loss from operations	(352,532)	(405,596)
Nonoperating revenues:		
Equipment sales	7,580	6,940
State PERS relief	-	9,156
Miscellaneous revenue	500	626
Total nonoperating revenues	8,080	16,722
Change in net assets	(344,452)	(388,874)
Net assets, beginning of year	1,859,102	2,247,976
Net assets, end of year	$ 1,514,650	1,859,102

Exhibit H-7

CITY OF KOTZEBUE, ALASKA
Refuse Enterprise Fund
Statement of Cash Flows
Year Ended June 30, 2008
(With Comparative Amounts for 2007)

	2008	2007
Cash flows from operating activities:		
Receipts from customers	$ 720,467	679,841
Other miscellaneous receipts	8,080	7,566
Payments to suppliers	(215,949)	(196,634)
Payments to employees	(397,012)	(344,783)
Payments for interfund services used	(172,992)	(168,498)
Net cash flows from operating activities	(57,406)	(22,508)
Cash flows from capital and related financing activities- purchase of machinery and equipment	-	(10,151)
Net decrease in cash and investments	(57,406)	(32,659)
Cash and investments, beginning of year	80,003	112,662
Cash and investments, end of year	$ 22,597	80,003
Reconciliation of loss from operations to net cash provided (used) by operating activities:		
Loss from operations	(352,532)	(405,596)
Adjustments to reconcile loss from operations to net cash flows from operating activities:		
Miscellaneous nonoperating revenues	8,080	7,566
Noncash expense - PERS relief	-	9,156
Decrease in allowance for doubtful accounts	-	(2,014)
Depreciation	252,340	343,155
(Increase) decrease in assets - accounts receivable	270	(5,168)
Increase (decrease) in liabilities:		
Accounts payable	(2,330)	991
Accrued payroll and payroll liabilities	154	1
Accrued leave	(1,026)	(5,011)
Net pension/OPEB obligation	-	(3,226)
Landfill closure costs	37,638	37,638
Net cash flows from operating activities	$ (57,406)	(22,508)

CITY OF KOTZEBUE, ALASKA

Schedule of Expenditures of Federal Awards
Year Ended June 30, 2008

Federal Grant Title	Grant Number	Catalog of Federal Domestic Assistance Number	Total Grant Award	July 1, 2007 Receivable	Federal Share of Expenditures	Federal Receipts	June 30, 2008 Receivable
Department of Health and Human Services							
FY 05 PHS Grant	AN05-N99	93.ANTHC	$ 752,000	-	264,604	264,604	-
Department of Agriculture							
Water Storage Tank	-	10.760	1,709,400	743	-	-	743
Passed through the State of Alaska Department of Environmental Conservation:							
2005 Sanitation Utilities Development (Federal share)	51522	10.760	6,806,200	220,981	749,902	805,993	164,890
2007 Sanitation Utilities Development (Federal share)	51523	10.760	6,375,000	-	1,552,058	982,210	569,848
Total Department of Agriculture				221,724	2,301,960	1,788,203	735,481
Environmental Protection Agency							
Passed through the State of Alaska Department of Environmental Conservation:							
Water Distribution Upgrade (Federal share)	51521	66.606	75,000	7,500	-	-	7,500
Sewage Lagoon Expansion (Federal share)	51520	66.606	3,380,625	2,116	1,356	2,116	1,356
Total Environmental Protection Agency				9,616	1,356	2,116	8,856
Department of Transportation							
Passed through the State of Alaska Department of Transportation and Public Facilities - Utility Work for Kotzebue 5th Avenue (Federal share)	60748	20.205	66,600	5,528	-	5,528	-
Department of Justice							
Edward Byrne Justice Assistance Grant	2005-DJ-BX-1039	16.738	10,942	3,287	-	-	3,287
Passed through the State of Alaska Department of Public Safety:							
Asset Forfeitures	-	16.900	37,012	-	37,012	37,012	-
Multijurisdictional Task Force	07-023F	16.738	57,447	13,245	-	13,245	-
Multijurisdictional Task Force	08-023F	16.738	57,824	-	49,621	42,028	7,593
Total Department of Justice				16,532	86,633	92,285	10,880
Department of Homeland Security							
Passed through the State of Alaska Department of Transportation and Public Facilities - Airport Law Enforcement Personnel (Federal share)	HSTS0208HSLR358	97.090	146,183	-	12,898	-	12,898
Total Federal Financial Assistance			$	253,400	2,667,451	2,152,736	768,115

Exhibit J-1

CITY OF KOTZEBUE, ALASKA
Schedule of State Financial Assistance
Year Ended June 30, 2008

State Grant Title	Grant Number	Total Grant Award	July 1, 2007 Receivable	State Share of Expenditures	State Receipts	June 30, 2008 Receivable
Department of Commerce, Community and Economic Development						
Community Facilities	03-MG-034	$ 72,481	4,639	-	4,639	-
Repair Fire Training Center and Construction Vehicle Warm Storage	02-MG-083	71,523	4,805	856	5,661	-
* Municipal Energy Assistance	-	220,821	-	220,821	220,821	-
* PERS Rebate	-	259,496	-	259,496	259,496	-
Total Department of Commerce, Community and Economic Development			9,444	481,173	490,617	-
Department of Environmental Conservation						
Sewage Lagoon Expansion (State share)	51520	1,126,875	707	452	707	452
Water Distribution Upgrade (State share)	51521	25,000	2,500	-	-	2,500
* 2005 Sanitation Utilities Development (State share)	51522	2,268,800	73,660	249,967	268,664	54,963
* 2007 Sanitation Utilities Development (State share)	51523	2,125,000	-	517,353	162,992	354,361
Total Department of Environmental Conservation			76,867	767,772	432,363	412,276
Department of Transportation and Public Facilities						
Utility Work for Kotzebue 5th Avenue (State share)	60748	6,611	549	-	549	-
Department of Revenue						
Electric and Telephone Co-op Tax FY08	-	69,016	-	69,016	-	69,016
Total State Financial Assistance		$	86,860	1,317,961	923,529	481,292

*Major program

CITY OF KOTZEBUE, ALASKA

Notes to the Schedules of Expenditures of Federal Awards
and State Financial Assistance

Year Ended June 30, 2008

Basis of Presentation

The accompanying Schedules of Expenditures of Federal Awards and State Financial Assistance include the grant activity of City of Kotzebue and are presented on the modified accrual basis of accounting. The information in the schedules is presented in accordance with the requirements of OMB Circular A-133, *Audits of States, Local Governments, and Non-Profit Organizations* and the *State of Alaska Audit Guide and Compliance Supplement for State Single Audits.*

SINGLE AUDIT SECTION

Mikunda,
Cottrell & Co., Inc.
Certified Public Accountants & Consultants

RSM McGladrey Network
An Independently Owned Member

Offices in Anchorage & K

Independent Auditor's Report on Internal Control Over Financial Reporting and on Compliance and Other Matters Based on an Audit of Financial Statements Performed in Accordance with *Government Auditing Standards*

Honorable Mayor and City Council
City of Kotzebue, Alaska

We have audited the financial statements of the governmental activities, the business-type activities, each major fund, and the aggregate remaining fund information of the City of Kotzebue, Alaska, as of and for the year ended June 30, 2008, and have issued our report thereon dated November 17, 2008. We conducted our audit in accordance with auditing standards generally accepted in the United States of America and the standards applicable to financial audits contained in *Government Auditing Standards*, issued by the Comptroller General of the United States.

Internal Control Over Financial Reporting

In planning and performing our audit, we considered the City of Kotzebue's internal control over financial reporting as a basis for designing our auditing procedures for the purpose of expressing our opinion on the financial statements, but not for the purpose of expressing an opinion on the effectiveness of the City of Kotzebue's internal control over financial reporting. Accordingly, we do not express an opinion on the effectiveness of the City of Kotzebue's internal control over financial reporting.

A *control deficiency* exists when the design or operation of a control does not allow management or employees, in the normal course of performing their assigned functions, to prevent or detect misstatements on a timely basis. A *significant deficiency* is a control deficiency, or combination of control deficiencies, that adversely affects the entity's ability to initiate, authorize, record, process, or report financial data reliably in accordance with generally accepted accounting principles such that there is more than a remote likelihood that a misstatement of the entity's financial statements that is more than inconsequential will not be prevented or detected by the entity's internal control.

A *material weakness* is a significant deficiency, or combination of significant deficiencies, that results in more than a remote likelihood that a material misstatement of the financial statements will not be prevented or detected by the entity's internal control.

Our consideration of internal control over financial reporting was for the limited purpose described in the first paragraph of this section and would not necessarily identify all deficiencies in internal control that might be significant deficiencies or material weaknesses. We did not identify any deficiencies in internal control over financial reporting that we consider to be material weaknesses, as defined above.

3601 "C" Street, Suite 600 • Anchorage, Alaska 99503 • (907) 278-8878 • Fax (907) 278-5779 • www.mcc-cpa.com

Honorable Mayor and City Council
City of Kotzebue, Alaska

Compliance and Other Matters

As part of obtaining reasonable assurance about whether the City of Kotzebue's financial statements are free of material misstatement, we performed tests of its compliance with certain provisions of laws, regulations, contracts and grant agreements, noncompliance with which could have a direct and material effect on the determination of financial statement amounts. However, providing an opinion on compliance with those provisions was not an objective of our audit and, accordingly, we do not express such an opinion. The results of our tests disclosed no instances of noncompliance or other matters that are required to be reported under *Government Auditing Standards*.

We noted certain matters that we reported to management of the City of Kotzebue in a separate letter dated November 17, 2008.

This report is intended solely for the information and use of the City of Kotzebue's management, Honorable Mayor and City Council, appropriate federal agencies, the State of Alaska and, if applicable, pass-through entities, and is not intended to be and should not be used by anyone other than these specified parties.

Mikunda, Cottrell & Co.

Anchorage, Alaska
November 17, 2008

Mikunda, Cottrell & Co., Inc.
Certified Public Accountants & Consultants

RSM McGladrey Network
An Independently Owned Member

Offices in Anchorage & K

Independent Auditor's Report on Compliance with Requirements Applicable to Each Major Program and on Internal Control Over Compliance in Accordance with OMB Circular A-133

Honorable Mayor and City Council
City of Kotzebue, Alaska

Compliance

We have audited the compliance of the City of Kotzebue with the types of compliance requirements described in the *OMB Circular A-133, Compliance Supplement* that are applicable to each of its major federal programs for the year ended June 30, 2008. The City of Kotzebue's major federal programs are identified in the summary of auditor's results section of the accompanying Schedule of Findings and Questioned Costs. Compliance with the requirements of laws, regulations, contracts, and grants applicable to each of its major federal programs is the responsibility of the City of Kotzebue's management. Our responsibility is to express an opinion on the City of Kotzebue's compliance based on our audit.

We conducted our audit of compliance in accordance with auditing standards generally accepted in the United States of America; the standards applicable to financial audits contained in *Government Auditing Standards*, issued by the Comptroller General of the United States; and OMB Circular A-133, *Audits of States, Local Governments, and Non-Profit Organizations*. Those standards and OMB Circular A-133 require that we plan and perform the audit to obtain reasonable assurance about whether noncompliance with the types of compliance requirements referred to above that could have a direct and material effect on a major federal program occurred. An audit includes examining, on a test basis, evidence about the City of Kotzebue's compliance with those requirements and performing such other procedures as we considered necessary in the circumstances. We believe that our audit provides a reasonable basis for our opinion. Our audit does not provide a legal determination of the City of Kotzebue's compliance with those requirements.

In our opinion, the City of Kotzebue complied, in all material respects, with the requirements referred to above that are applicable to each of its major federal programs for the year ended June 30, 2008.

3601 "C" Street, Suite 600 • Anchorage, Alaska 99503 • (907) 278-8878 • Fax (907) 278-5779 • www.mcc-cpa.com

Honorable Mayor and City Council
City of Kotzebue, Alaska

Internal Control Over Compliance

The management of the City of Kotzebue is responsible for establishing and maintaining effective internal control over compliance with the requirements of laws, regulations, contracts, and grants applicable to federal programs. In planning and performing our audit, we considered the City of Kotzebue's internal control over compliance with the requirements that could have a direct and material effect on a major federal program in order to determine our auditing procedures for the purpose of expressing our opinion on compliance but, not for the purpose of expressing an opinion on the effectiveness of internal control over compliance. Accordingly, we do not express an opinion on the effectiveness of the City of Kotzebue's internal control over compliance.

A *control deficiency* in an entity's internal control over compliance exists when the design or operation of a control does not allow management or employees, in the normal course of performing their assigned functions, to prevent or detect noncompliance with a type of compliance requirement of a federal program on a timely basis. A *significant deficiency* is a control deficiency, or combination of control deficiencies, that adversely affects the entity's ability to administer a federal program such that there is more than a remote likelihood that noncompliance with a type of compliance requirement of a federal program that is more than inconsequential will not be prevented or detected by the entity's internal control.

A *material weakness* is a significant deficiency, or combination of significant deficiencies, that results in more than a remote likelihood that material noncompliance with a type of compliance requirement of a federal program will not be prevented or detected by the entity's internal control.

Our consideration of internal control over compliance was for the limited purpose described in the first paragraph of this section and would not necessarily identify all deficiencies in internal control that might be significant deficiencies or material weaknesses. We did not identify any deficiencies in internal control over compliance that we consider to be material weaknesses, as defined above.

This report is intended solely for the information and use of the City of Kotzebue's management, Honorable Mayor and City Council, federal awarding agencies and, if applicable, pass-through entities, and is not intended to be and should not be used by anyone other than these specified parties.

Mikunda, Cottrell & Co.

Anchorage, Alaska
November 17, 2008

Mikunda,
Cottrell & Co., Inc.
Certified Public Accountants & Consultants

RSM McGladrey Network
An Independently Owned Member

Offices in Anchorage & Ke

Independent Auditor's Report on Compliance with Requirements Applicable to Each Major Program and on Internal Control Over Compliance in Accordance with the *State of Alaska Audit Guide and Compliance Supplement for State Single Audits*

Honorable Mayor and City Council
City of Kotzebue, Alaska

Compliance

We have audited the compliance of the City of Kotzebue with the types of compliance requirements described in the *State of Alaska Audit Guide and Compliance Supplement for State Single Audits* that are applicable to each of its major state programs for the year ended June 30, 2008. The City of Kotzebue's major state programs are identified in the accompanying Schedule of State Financial Assistance. Compliance with laws, regulations, contracts, and grants applicable to each of its major state programs is the responsibility of the City of Kotzebue's management. Our responsibility is to express an opinion on the City of Kotzebue's compliance based on our audit.

We conducted our audit of compliance in accordance with auditing standards generally accepted in the United States of America; the standards applicable to financial audits contained in *Government Auditing Standards* issued by the Comptroller General of the United States and the *State of Alaska Audit Guide and Compliance Supplement for State Single Audits*. Those standards and *the State of Alaska Audit Guide and Compliance Supplement for State Single Audits* require that we plan and perform the audit to obtain reasonable assurance about whether noncompliance with the types of compliance requirements referred to above that could have a direct and material effect on a major state program occurred. An audit includes examining, on a test basis, evidence about the City of Kotzebue's compliance with those requirements and performing such other procedures as we considered necessary in the circumstances. We believe that our audit provides a reasonable basis for our opinion. Our audit does not provide a legal determination of the City of Kotzebue's compliance with those requirements.

In our opinion, the City of Kotzebue complied, in all material respects, with the requirements referred to above that are applicable to each of its major state programs for the year ended June 30, 2008.

3601 "C" Street, Suite 600 • Anchorage, Alaska 99503 • (907) 278-8878 • Fax (907) 278-5779 • www.mcc-cpa.com

Honorable Mayor and City Council
City of Kotzebue, Alaska

Internal Control Over Compliance

The management of the City of Kotzebue is responsible for establishing and maintaining effective internal control over compliance with the requirements of laws, regulations, contracts, and grants applicable to state programs. In planning and performing our audit, we considered the City of Kotzebue's internal control over compliance with the requirements that could have a direct and material effect on a major state program in order to determine our auditing procedures for the purpose of expressing our opinion on compliance but, not for the purpose of expressing an opinion on the effectiveness of internal control over compliance. Accordingly, we do not express an opinion on the effectiveness of the City of Kotzebue's internal control over compliance.

A *control deficiency* in an entity's internal control over compliance exists when the design or operation of a control does not allow management or employees, in the normal course of performing their assigned functions, to prevent or detect noncompliance with a type of compliance requirement of a state program on a timely basis. A *significant deficiency* is a control deficiency, or combination of control deficiencies, that adversely affects the entity's ability to administer a state program such that there is more than a remote likelihood that noncompliance with a type of compliance requirement of a state program that is more than inconsequential will not be prevented or detected by the entity's internal control.

A *material weakness* is a significant deficiency, or combination of significant deficiencies, that results in more than a remote likelihood that material noncompliance with a type of compliance requirement of a state program will not be prevented or detected by the entity's internal control.

Our consideration of internal control over compliance was for the limited purpose described in the first paragraph of this section and would not necessarily identify all deficiencies in internal control that might be significant deficiencies or material weaknesses. We did not identify any deficiencies in internal control over compliance that we consider to be material weaknesses, as defined above.

This report is intended solely for the information and use of the City of Kotzebue's management, Honorable Mayor and City Council, and the State of Alaska, and is not intended to be and should not be used by anyone other than these specified parties.

Mikunda, Cottrell & Co.

Anchorage, Alaska
November 17, 2008

CITY OF KOTZEBUE, ALASKA

Schedule of Findings and Questioned Costs

Year Ended June 30, 2008

I. Summary of Auditor's Results

Financial Statements

Type of auditor's report issued — Unqualified

Internal control over financial reporting:

- Material weakness(es) identified? ____ yes __X__ no
- Significant deficiency(ies) identified that are not considered to be material weakness(es)? ____ yes __X__ none reported
- Noncompliance material to financial statements noted? ____ yes __X__ no

Federal Financial Assistance

Internal control over major programs:

- Material weakness(es) identified? ____ yes __X__ no
- Significant deficiency(ies) identified that are not considered to be material weakness(es)? ____ yes __X__ none reported

Type of auditor's report issued on compliance for major programs? — Unqualified

Any audit findings disclosed that are required to be reported in accordance with section 510(a) of Circular A-133? ____ yes __X__ no

Identification of major programs:

Agency	CFDA Number	Name of Federal Program or Cluster
Department of Agriculture	10.760	2005 Sanitation Utilities Development
Department of Agriculture	10.760	2007 Sanitation Utilities Development

Dollar threshold used to distinguish between Type A and Type B programs: — $300,000

Auditee qualified as low-risk auditee? __X__ yes ____ no

State Financial Assistance

Internal control over major programs:

- Material weakness(es) identified? ____ yes __X__ no
- Significant deficiency(ies) identified that are not considered to be material weakness(es)? ____ yes __X__ none reported

Type of auditor's report issued on compliance for major programs? — Unqualified

I. Summary of Auditor's Results, continued

State Financial Assistance, continued

Dollar threshold used to distinguish a state major program?	$75,000

II. Financial Statement Findings

None noted.

III. Federal Award Findings and Questioned Costs

None noted.

IV. State Award Findings and Questioned Costs

None noted.

CITY OF KOTZEBUE, ALASKA

Summary Schedule of Prior Audit Findings

Year Ended June 30, 2008

Federal
There were no prior year audit findings.

State of Alaska
There were no prior year audit findings.

CITY OF KOTZEBUE, ALASKA

Corrective Action Plan

Year Ended June 30, 2008

There are no current year findings; therefore, no corrective action plan is required.

CITY OF KOTZEBUE, ALASKA

Basic Financial Statements, Supplementary
Information and Single Audit Reports

Year Ended June 30, 2009

CITY OF KOTZEBUE, ALASKA

Table of Contents

	Exhibit	Page
FINANCIAL SECTION		
Independent Auditor's Report		1-2
Basic Financial Statements		
Government-wide Financial Statements:		
Statement of Net Assets	A-1	4
Statement of Activities	A-2	5
Fund Financial Statements:		
Governmental Funds:		
Balance Sheet	B-1	6
Reconciliation of Governmental Funds Balance Sheet to Statement of Net Assets	B-2	7
Statement of Revenues, Expenditures and Changes in Fund Balances	B-3	8
Reconciliation of Change in Fund Balances of Governmental Funds to Statement of Activities	B-4	9
Statement of Revenues, Expenditures and Changes in Fund Balance - Budget and Actual:		
General Fund	C-1	10
Gaming Special Revenue Fund	C-2	11
Enterprise Funds:		
Statement of Net Assets	D-1	12
Statement of Revenues, Expenses and Changes in Net Assets	D-2	13
Statement of Cash Flows	D-3	14
Notes to Basic Financial Statements		15-30
Supplementary Information		
Combining and Individual Fund Financial Statements and Schedules:		
Nonmajor Governmental Funds:		
Combining Balance Sheet	E-1	32
Combining Statement of Revenues, Expenditures and Changes in Fund Balances (Deficit)	E-2	33
General Fund:		
Balance Sheet	F-1	35
Schedule of Revenues, Expenditures and Changes in Fund Balance - Budget and Actual	F-2	36-41

CITY OF KOTZEBUE, ALASKA

Table of Contents, continued

	Exhibit	Page
FINANCIAL SECTION		
Supplementary Information, continued		
Combining and Individual Fund Financial Statements and Schedules, continued:		
Special Revenue Funds:		
Schedule of Revenues, Expenditures and Changes in Fund Balance – Budget and Actual:		
Gaming	G-1	43
Adult Center	G-2	44
Enterprise Funds:		
Water and Sewer Utility:		
Statement of Net Assets	H-1	46
Statement of Revenues, Expenses and Changes in Net Assets	H-2	47-48
Statement of Cash Flows	H-3	49
Combining Schedule of Water and Sewer Capital Projects	H-4	50
Refuse:		
Statement of Net Assets	H-5	51
Statement of Revenues, Expenses and Changes in Net Assets	H-6	52
Statement of Cash Flows	H-7	53
Schedule of Expenditures of Federal Awards	I-1	54
Schedule of State Financial Assistance	J-1	55
Notes to the Schedules of Expenditures of Federal Awards and State Financial Assistance		56
SINGLE AUDIT SECTION		
Independent Auditor's Report on Internal Control Over Financial Reporting and on Compliance and Other Matters Based on an Audit of Financial Statements Performed in Accordance with *Government Auditing Standards*		58-59

CITY OF KOTZEBUE, ALASKA

Table of Contents, continued

	Page
SINGLE AUDIT SECTION, continued	
Independent Auditor's Report on Compliance with Requirements Applicable to Each Major Program and on Internal Control Over Compliance in Accordance with OMB Circular A-133	60-62
Independent Auditor's Report on Compliance with Requirements Applicable to Each Major Program and on Internal Control Over Compliance in Accordance with the *State of Alaska Audit Guide and Compliance Supplement for State Single Audits*	63-64
Schedule of Findings and Questioned Costs	65-68
Summary Schedule of Prior Audit Findings	69
Corrective Action Plan	70

(This page left blank intentionally)

Mikunda,
Cottrell & Co., Inc.
Certified Public Accountants & Consultants

RSM McGladrey Network
An Independently Owned Member

Offices in Anchorage & Kenai

Independent Auditor's Report

Honorable Mayor and City Council
City of Kotzebue, Alaska

We have audited the accompanying financial statements of the governmental activities, the business-type activities, each major fund, and the aggregate remaining fund information of the City of Kotzebue, Alaska, as of and for the year ended June 30, 2009, which collectively comprise the City's basic financial statements as listed in the table of contents. These financial statements are the responsibility of the City's management. Our responsibility is to express opinions on these financial statements based on our audit.

We conducted our audit in accordance with auditing standards generally accepted in the United States of America and the standards applicable to financial audits contained in *Government Auditing Standards* issued by the Comptroller General of the United States. Those standards require that we plan and perform the audit to obtain reasonable assurance about whether the financial statements are free of material misstatement. An audit includes examining, on a test basis, evidence supporting the amounts and disclosures in the financial statements. An audit also includes assessing the accounting principles used and significant estimates made by management, as well as evaluating the overall financial statement presentation. We believe that our audit provides a reasonable basis for our opinions.

In our opinion, the financial statements referred to above present fairly, in all material respects, the respective financial position of the governmental activities, the business-type activities, each major fund, and the aggregate remaining fund information of the City of Kotzebue, Alaska, as of June 30, 2009, and the respective changes in financial position and cash flows, where applicable, thereof and the respective budgetary comparison for the General Fund and Gaming Special Revenue Fund for the year then ended in conformity with accounting principles generally accepted in the United States of America.

In accordance with *Government Auditing Standards*, we have also issued our report dated July 16, 2010, on our consideration of City of Kotzebue's internal control over financial reporting and on our tests of its compliance with certain provisions of laws, regulations, contracts, and grant agreements and other matters. The purpose of that report is to describe the scope of our testing of internal control over financial reporting and compliance and the results of that testing, and not to provide an opinion on the internal control over financial reporting or on compliance. That report is an integral part of an audit performed in accordance with *Government Auditing Standards* and should be considered in assessing the results of our audit.

3601 "C" Street, Suite 600 * Anchorage, Alaska 99503 * (907) 278-8878 * Fax (907) 278-5779 * www.mcc-cpa.com

Honorable Mayor and City Council
City of Kotzebue, Alaska

City of Kotzebue has not presented the Management's Discussion and Analysis that accounting principles generally accepted in the United States of America require to supplement, although not to be part of, the basic financial statements.

Our audit was conducted for the purpose of forming opinions on the financial statements that collectively comprise the City of Kotzebue's basic financial statements. The accompanying Schedule of Expenditures of Federal Awards, Schedule of State Financial Assistance, and the combining and individual fund financial statements and schedules listed in the table of contents are presented for purposes of additional analysis and are not a required part of the basic financial statements. The Schedule of Expenditures of Federal Awards is required by U.S. Office of Management and Budget Circular A-133, *Audits of States, Local Governments, and Nonprofit Organizations* and the Schedule of State Financial Assistance is required by the *State of Alaska Audit Guide and Compliance Supplement for State Single Audits*. Such information has been subjected to the auditing procedures applied in the audit of the basic financial statements and, in our opinion, is fairly stated in all material respects in relation to the basic financial statements taken as a whole.

Mikunda, Cottrell & Co.

Anchorage, Alaska
July 16, 2010

BASIC FINANCIAL STATEMENTS

Exhibit A-1

CITY OF KOTZEBUE, ALASKA
Statement of Net Assets
June 30, 2009

		Governmental Activities	Business-type Activities	Total
Assets				
Cash and investments	$	750,411	1,514,838	2,265,249
Receivables, net of allowance for uncollectible amounts:				
Accounts		-	203,205	203,205
Grants and shared revenues		111,242	1,492,132	1,603,374
Sales tax		227,692	-	227,692
Other		106,675	-	106,675
Internal balances		66,571	(66,571)	-
Prepaid items		21,000	-	21,000
Capital assets:				
Land and construction in progress		497,270	8,029,777	8,527,047
Other capital assets, net of depreciation		3,504,604	24,487,271	27,991,875
Total assets	$	5,285,465	35,660,652	40,946,117
Liabilities				
Accounts payable		118,053	779,874	897,927
Accrued payroll and payroll liabilities		178,867	37,277	216,144
Unearned revenue		130,236	10,467	140,703
Deposits		-	195	195
Noncurrent liabilities:				
Due within one year - accrued leave		272,759	52,496	325,255
Due in more than one year - landfill closure costs		-	590,987	590,987
Total liabilities		699,915	1,471,296	2,171,211
Net Assets				
Invested in capital assets		4,001,874	32,517,048	36,518,922
Unrestricted		583,676	1,672,308	2,255,984
Total net assets		4,585,550	34,189,356	38,774,906
Total liabilities and net assets	$	5,285,465	35,660,652	40,946,117

See accompanying notes to basic financial statements.

Exhibit A-2

CITY OF KOTZEBUE, ALASKA
Statement of Activities
Year Ended June 30, 2009

Activities	Expenses	Program Revenues: Fees, Fines & Charges for Services	Program Revenues: Operating Grants & Contri-butions	Program Revenues: Capital Grants & Contri-butions	Net (Expense) Revenue and Changes in Net Assets: Govern-mental Activities	Net (Expense) Revenue and Changes in Net Assets: Business-type Activities	Net (Expense) Revenue and Changes in Net Assets: Totals
Governmental:							
General government	$ 1,435,143	558,149	-	-	(876,994)	-	(876,994)
Public safety	3,247,828	319,843	964,657	99,724	(1,863,604)	-	(1,863,604)
Public works	2,393,983	-	-	169,238	(2,224,745)	-	(2,224,745)
Community services	105,519	-	-	-	(105,519)	-	(105,519)
Adult Center operations	286,744	98,309	-	-	(188,435)	-	(188,435)
Gaming operations	1,168,840	1,243,535	-	-	74,695	-	74,695
Total governmental activities	8,638,057	2,219,836	964,657	268,962	(5,184,602)	-	(5,184,602)
Business-type:							
Water and sewer utility	3,690,082	1,764,682	61,001	5,741,498	-	3,877,099	3,877,099
Refuse	948,970	676,337	15,250	-	-	(257,383)	(257,383)
Total business-type activities	4,639,052	2,441,019	76,251	5,741,498	-	3,619,716	3,619,716
Totals	$ 13,277,109	4,660,855	1,040,908	6,010,460	(5,184,602)	3,619,716	(1,564,886)
General revenues:							
Taxes:							
Sales taxes					$ 3,233,926	-	3,233,926
Penalties and interest on delinquent taxes					12,642	-	12,642
Other taxes					85,881	-	85,881
Grants and entitlements not restricted to a specific purpose					753,271	-	753,271
Investment income					37,074	-	37,074
Other					41,459	-	41,459
Special item - write off of NPO/OPEB					103,001	23,297	126,298
Total general revenues and special item					4,267,254	23,297	4,290,551
Change in net assets					(917,348)	3,643,013	2,725,665
Net assets, beginning of year					5,502,898	30,546,343	36,049,241
Net assets, end of year					$ 4,585,550	34,189,356	38,774,906

See accompanying notes to basic financial statements.

Exhibit B-1

CITY OF KOTZEBUE, ALASKA
Governmental Funds
Balance Sheet
June 30, 2009

Assets		Major Funds General	Major Funds Gaming Special Revenue	Nonmajor Funds	Total Governmental Funds
Cash and investments	$	583,296	107,862	59,253	750,411
Receivables:					
Grants and shared revenues		110,485	-	757	111,242
Sales tax		227,692	-	-	227,692
Other		106,675	-	-	106,675
Prepaid items		21,000	-	-	21,000
Due from other funds		87,401	-	-	87,401
Total assets	$	1,136,549	107,862	60,010	1,304,421
Liabilities and Fund Balances					
Liabilities:					
Accounts payable		101,308	5,038	11,707	118,053
Accrued payroll and payroll liabilities		164,218	4,455	10,194	178,867
Deferred revenue		116,872	-	13,364	130,236
Due to other funds		-	-	20,830	20,830
Total liabilities		382,398	9,493	56,095	447,986
Fund balances:					
Reserved:					
Encumbrances		15,727	-	-	15,727
Prepaid items		21,000	-	-	21,000
Unreserved - undesignated		717,424	98,369	3,915	819,708
Total fund balances		754,151	98,369	3,915	856,435
Total liabilities and fund balances	$	1,136,549	107,862	60,010	1,304,421

See accompanying notes to basic financial statements.

Exhibit B-2

CITY OF KOTZEBUE, ALASKA

Reconciliation of Governmental Funds Balance Sheet
to Statement of Net Assets
June 30, 2009

Total fund balances for governmental funds		$ 856,435
Total net assets reported for governmental activities in the Statement of Net Assets is different because:		
Capital assets used in governmental activities are not financial resources and therefore are not reported in the funds. These assets, net of accumulated depreciation consist of:		
Land and land improvements	$ 497,270	
Buildings	5,462,829	
Machinery and equipment	2,016,816	
Total capital assets	7,976,915	
Less accumulated depreciation	(3,975,041)	
Total capital assets, net of accumulated depreciation		4,001,874
Long-term liabilities are not due and payable in the current period and therefore are not reported as fund liabilities. These liabilities consist of accrued leave		(272,759)
Total net assets of governmental activities		$ 4,585,550

See accompanying notes to basic financial statements.

Exhibit B-3

CITY OF KOTZEBUE, ALASKA
Governmental Funds
Statement of Revenues, Expenditures and Changes in Fund Balances
Year Ended June 30, 2009

	Major Funds			
	General	Gaming Special Revenue	Nonmajor Funds	Total Governmental Funds
Revenues:				
Taxes	$ 3,332,449	-	-	3,332,449
Intergovernmental	1,707,761	10,167	268,962	1,986,890
Charges for services	827,646	-	-	827,646
Investment income	37,074	-	-	37,074
Gaming	-	1,243,535	-	1,243,535
Adult Center	-	-	98,309	98,309
Other	91,805	-	-	91,805
Total revenues	5,996,735	1,253,702	367,271	7,617,708
Expenditures:				
Current:				
General government	1,254,657	-	-	1,254,657
Public safety	3,093,744	-	104,973	3,198,717
Public works	2,173,367	-	-	2,173,367
Community services	106,550	-	-	106,550
Gaming operations	-	1,169,057	-	1,169,057
Adult Center operations	-	-	247,923	247,923
Nondepartmental	139,224	-	-	139,224
Capital outlay	-	-	164,155	164,155
Total expenditures	6,767,542	1,169,057	517,051	8,453,650
Excess of revenues over (under) expenditures	(770,807)	84,645	(149,780)	(835,942)
Other financing sources (uses):				
Transfers in	-	-	144,531	144,531
Transfers out	(66,531)	(78,000)	-	(144,531)
Net other financing sources (uses)	(66,531)	(78,000)	144,531	-
Net change in fund balances	(837,338)	6,645	(5,249)	(835,942)
Fund balances, beginning of year	1,591,489	91,724	9,164	1,692,377
Fund balances, end of year	$ 754,151	98,369	3,915	856,435

See accompanying notes to basic financial statements.

Exhibit B-4

CITY OF KOTZEBUE, ALASKA

Reconciliation of Change in Fund Balances of Governmental Funds
to Statement of Activities
Year Ended June 30, 2009

Net change in fund balances - total governmental funds		$ (835,942)
The change in net assets reported for governmental activities in the Statement of Activities is different because:		
Governmental funds report capital outlays as expenditures. However on the Statement of Activities, depreciation expense is recognized to allocate the cost of these items over their estimated useful lives.		
Capital assets additions	$ 85,061	
Depreciation	(254,792)	
Loss on disposal of capital assets	(3,333)	
		(173,064)
Some expenses reported in the Statement of Activities do not require the use of current financial resources and, therefore, are not reported as expenditures in governmental funds. This is the amount of decrease (increase) in:		
Accrued leave	(11,343)	
Net pension/OPEB obligation	103,001	
		91,658
Change in net assets of governmental activities		$ (917,348)

See accompanying notes to basic financial statements.

Exhibit C-1

CITY OF KOTZEBUE, ALASKA
General Fund
Statement of Revenues, Expenditures, and
Changes in Fund Balance - Budget and Actual
Year Ended June 30, 2009

	Original Budget	Final Budget	Actual	Variance with Final Budget Positive (Negative)
Revenues:				
Taxes	$ 3,063,500	3,374,000	3,332,449	(41,551)
Intergovernmental	1,536,380	1,538,548	1,707,761	169,213
Charges for services	911,100	885,000	827,646	(57,354)
Investment income	50,000	36,000	37,074	1,074
Other	234,488	119,866	91,805	(28,061)
Total revenues	5,795,468	5,953,414	5,996,735	43,321
Expenditures:				
General government	1,219,700	1,221,773	1,254,657	(32,884)
Public safety	2,653,449	3,077,435	3,093,744	(16,309)
Public works	1,412,831	2,061,588	2,173,367	(111,779)
Community services	234,886	107,500	106,550	950
Nondepartmental	274,602	135,980	139,224	(3,244)
Total expenditures	5,795,468	6,604,276	6,767,542	(163,266)
Excess of revenues over (under) expenditures	-	(650,862)	(770,807)	(119,945)
Other financing uses - transfers out	-	(67,682)	(66,531)	1,151
Net change in fund balance	$ -	(718,544)	(837,338)	(118,794)
Fund balance, beginning of year			1,591,489	
Fund balance, end of year			$ 754,151	

See accompanying notes to basic financial statements.

Exhibit C-2

CITY OF KOTZEBUE, ALASKA
Gaming Special Revenue Fund
Statement of Revenues, Expenditures and
Changes in Fund Balance - Budget and Actual
Year Ended June 30, 2009

		Original Budget	Final Budget	Actual	Variance Positive (Negative)
Revenues:					
Bingo and pull tabs	$	1,205,965	1,245,125	1,243,535	(1,590)
State of Alaska - PERS relief		-	4,217	10,167	5,950
Total revenues		1,205,965	1,249,342	1,253,702	4,360
Expenditures:					
Personnel		145,416	155,028	151,494	3,534
Rent		30,800	30,800	29,150	1,650
Supplies		35,265	24,500	23,573	927
Payouts to winners		832,600	877,963	881,886	(3,923)
Donations		50,000	50,000	50,000	-
Insurance		7,170	6,411	6,411	-
Allocated administration		18,200	18,200	18,204	(4)
Other		8,573	8,440	8,339	101
Total expenditures		1,128,024	1,171,342	1,169,057	2,285
Excess of revenues over expenditures		77,941	78,000	84,645	6,645
Other financing uses - transfers out		-	(78,000)	(78,000)	-
Net change in fund balance	$	77,941	-	6,645	6,645
Fund balance, beginning of year				91,724	
Fund balance, end of year			$	98,369	

See accompanying notes to basic financial statements.

Exhibit D-1

CITY OF KOTZEBUE, ALASKA
Enterprise Funds
Statement of Net Assets
June 30, 2009

Assets	Major Funds: Water and Sewer Utility	Major Funds: Refuse	Total Enterprise Funds
Current assets:			
Cash and investments	$ 1,514,838	-	1,514,838
Receivables:			
Accounts	350,326	129,573	479,899
Allowance for doubtful receivables	(199,140)	(77,554)	(276,694)
Grants	1,492,132	-	1,492,132
Net receivables	1,643,318	52,019	1,695,337
Total current assets	3,158,156	52,019	3,210,175
Property, plant, and equipment	76,396,841	5,638,987	82,035,828
Accumulated depreciation	(45,791,880)	(3,726,900)	(49,518,780)
Net property, plant, and equipment	30,604,961	1,912,087	32,517,048
Total assets	$ 33,763,117	1,964,106	35,727,223
Liabilities and Net Assets			
Liabilities:			
Current liabilities:			
Accounts payable	773,260	6,614	779,874
Accrued payroll and payroll liabilities	23,542	13,735	37,277
Accrued leave	32,385	20,111	52,496
Deferred revenue	10,467	-	10,467
Deposits	195	-	195
Due to other funds	-	66,571	66,571
Total current liabilities	839,849	107,031	946,880
Noncurrent liabilities - landfill closure costs	-	590,987	590,987
Total liabilities	839,849	698,018	1,537,867
Net assets:			
Invested in capital assets	30,604,961	1,912,087	32,517,048
Unrestricted (deficit)	2,318,307	(645,999)	1,672,308
Total net assets	32,923,268	1,266,088	34,189,356
Total liabilities and net assets	$ 33,763,117	1,964,106	35,727,223

See accompanying notes to basic financial statements.

Exhibit D-2

CITY OF KOTZEBUE, ALASKA
Enterprise Funds
Statement of Revenues, Expenses and Changes in Net Assets
Year Ended June 30, 2009

	Major Funds		
	Water and Sewer Utility	Refuse	Total Enterprise Funds
Operating revenues:			
Water use charges and connect fees	$ 1,211,749	-	1,211,749
Sewer use charges and connect fees	523,900	-	523,900
Refuse and landfill	-	675,862	675,862
Penalties and interest	20,344	-	20,344
Total operating revenues	1,755,993	675,862	2,431,855
Operating expenses:			
Administration	358,667	168,504	527,171
Water	1,213,605	-	1,213,605
Sewer	516,179	-	516,179
Refuse and landfill	-	667,493	667,493
Depreciation	1,601,631	112,973	1,714,604
Total operating expenses	3,690,082	948,970	4,639,052
Loss from operations	(1,934,089)	(273,108)	(2,207,197)
Nonoperating revenues:			
Equipment rental	7,625	-	7,625
Equipment sales	1,014	-	1,014
State PERS relief	61,001	15,250	76,251
Miscellaneous revenue	50	475	525
Total nonoperating revenues	69,690	15,725	85,415
Loss before contributions and special item	(1,864,399)	(257,383)	(2,121,782)
Capital contributions	5,741,498	-	5,741,498
Special item - write off of NPO/OPEB	14,476	8,821	23,297
Change in net assets	3,891,575	(248,562)	3,643,013
Net assets, beginning of year	29,031,693	1,514,650	30,546,343
Net assets, end of year	$ 32,923,268	1,266,088	34,189,356

See accompanying notes to basic financial statements.

Exhibit D-3

CITY OF KOTZEBUE, ALASKA
Enterprise Funds
Statement of Cash Flows
Year Ended June 30, 2009

	Major Funds		
	Water and Sewer Utility	Refuse	Total Enterprise Funds
Cash flows from operating activities:			
Receipts from customers and users	$ 1,809,126	703,454	2,512,580
Other miscellaneous receipts	8,689	475	9,164
Payments to suppliers	(842,285)	(261,541)	(1,103,826)
Payments to employees	(649,227)	(363,052)	(1,012,279)
Payments for interfund services used	(338,304)	(101,933)	(440,237)
Net cash flows from operating activities	(12,001)	(22,597)	(34,598)
Cash flows from capital and related financing activities:			
Acquisition and construction of capital assets	(5,741,498)	-	(5,741,498)
Capital contributions received	5,405,978	-	5,405,978
Net cash flows from capital and related financing activities	(335,520)	-	(335,520)
Net decrease in cash and investments	(347,521)	(22,597)	(370,118)
Cash and investments, beginning of year	1,862,359	22,597	1,884,956
Cash and investments, end of year	$ 1,514,838	-	1,514,838
Reconciliation of loss from operations to net cash provided (used) by operating activities:			
Loss from operations	(1,934,089)	(273,108)	(2,207,197)
Adjustments to reconcile loss from operations to net cash flows from operating activities:			
Miscellaneous nonoperating revenues	8,689	475	9,164
Noncash expense - PERS relief	61,001	15,250	76,251
Increase in allowance for doubtful accounts	51,909	21,169	73,078
Depreciation	1,601,631	112,973	1,714,604
Decrease in assets - accounts receivable	(621)	6,423	5,802
Increase (decrease) in liabilities:			
Accounts payable	196,282	4,205	200,487
Accrued payroll and payroll liabilities	(64)	1,974	1,910
Accrued leave	1,416	(4,945)	(3,529)
Deferred revenue	1,845	-	1,845
Due to other funds	-	66,571	66,571
Landfill closure costs	-	26,416	26,416
Net cash flows from operating activities	$ (12,001)	(22,597)	(34,598)

See accompanying notes to basic financial statements.

(1) Summary of Significant Accounting Policies

Reporting Entity

The City of Kotzebue was incorporated on October 14, 1958. The City operates under a Council-Manager form of government and provides a full range of services including public safety, streets, sanitation, water and sewer, health and social services, culture and recreation, public improvements, planning and zoning, and general administrative services.

The financial statements included in this report are for City of Kotzebue only. There are no other component units for which City of Kotzebue is financially accountable, nor do any special financial relationships exist between the City and any other entity.

The accounting policies of the City conform to generally accepted accounting principles as applicable to governments. The following is a summary of the more significant policies:

Government-Wide and Fund Financial Statements

The government-wide financial statements (i.e., the statement of net assets and the statement of activities) report information on all of the activities of the City. In general, the effect of interfund activity has been removed from these statements to minimize the double-counting of internal activities. *Governmental activities*, which normally are supported by taxes and intergovernmental revenues, are reported separately from *business-type activities,* which rely primarily on fees and charges to external parties.

The statement of activities demonstrates the degree to which the direct expenses of a given function or segment are offset by program revenues. *Direct expenses* are those that are clearly identifiable with a specific function or segment. *Program revenues* include 1) fees, fines and charges to customers or applicants who purchase, use, or directly benefit from goods, services, or privileges provided by a given function or segment and 2) grants and contributions that are restricted to meeting the operational or capital requirements of a particular function or segment. Taxes and other items not properly included among program revenues are reported instead as *general revenues*.

Separate financial statements are provided for governmental funds and proprietary funds. Major individual governmental funds and major individual enterprise funds are reported as separate columns in the fund financial statements.

Measurement Focus, Basis of Accounting, and Financial Statement Presentation

The government-wide and proprietary fund financial statements are reported using the economic resources measurement focus and the *accrual basis of accounting.* Revenues are recorded when earned and expenses are recorded when a liability is incurred, regardless of the timing of the related cash flows. Grants and similar items are recognized as revenue as soon as all eligibility requirements imposed by the provider have been met.

Summary of Significant Accounting Policies, continued

Measurement Focus, Basis of Accounting, and Financial Statement Presentation, continued

Governmental fund financial statements are reported using the current financial resources measurement focus and the *modified accrual basis of accounting*. Revenues are recognized as soon as they are both measurable and available. Revenues are considered to be *available* when they are collectible within the current period or soon enough thereafter to pay liabilities of the current period. For this purpose, the City considers all revenues except reimbursement grants to be available if they are collected within 60 days after year end. Reimbursement grants are considered available if they are collected within one year of the end of the current fiscal period. Expenditures generally are recorded when a liability is incurred, as under accrual accounting. However, debt service expenditures, as well as expenditures related to accrued leave are recorded only to the extent they have matured.

Sales taxes, charges for services, and interest associated with the current fiscal period are all considered to be susceptible to accrual and so have been recognized as revenues of the current fiscal period. Most other revenue items are considered to be measurable and available only when received by the government.

The City reports the following major funds:

Major governmental funds:

The *General Fund* is the City's primary operating fund. It accounts for all financial resources of the general government, except those required to be reported in another fund.

The *Gaming Special Revenue Fund* accounts for the operations of the gaming activities for the City of Kotzebue.

Major proprietary funds:

The *Water and Sewer Utility Enterprise Fund* is used to account for the operations of the City's water system and the waster water utility.

The *Refuse Enterprise Fund* is used to account for the operations of the City's solid waste and landfill activities.

Private-sector standards of accounting and financial reporting issued prior to December 1, 1989, generally are followed in both the government-wide and enterprise fund financial statements to the extent that those standards do not conflict with or contradict guidance of the Governmental Accounting Standards Board (GASB). Governments also have the option of following subsequent private-sector guidance for their business-type activities and enterprise funds, subject to the same limitation. The City has elected not to follow subsequent private-sector guidance.

Summary of Significant Accounting Policies, continued

Measurement Focus, Basis of Accounting, and Financial Statement Presentation, continued

As a general rule the effect of interfund activity has been eliminated from the government-wide financial statements. Exceptions to this general rule are allocated administration fees and charges between the enterprise funds and the various other funds and departments. Elimination of these charges would distort the direct costs and program revenues reported for the various functions concerned.

Amounts reported as *program revenues* include 1) charges to customers or applicants for goods, services, or privileges provided, 2) operating grants and contributions, and 3) capital grants and contributions. Internally dedicated resources are reported as *general revenues* rather than as program revenues. In addition, general revenues include all taxes, investment income, and State of Alaska entitlement revenues.

Proprietary funds distinguish *operating* revenues and expenses from *nonoperating* items. Operating revenues and expenses generally result from providing services and producing and delivering goods in connection with a proprietary fund's principal ongoing operations. The principal operating revenues of the Enterprise Funds are charges to customers for sales and services. Operating expenses for the Enterprise Funds include the costs of sales and services, administrative expenses and depreciation on capital assets. All revenues and expenses not meeting this definition are reported as nonoperating revenues and expenses.

When both restricted and unrestricted resources are available for use, it is the City's policy to use restricted resources first, then unrestricted resources as they are needed.

Cash and Cash Equivalents

For purposes of the statements of cash flows, the proprietary funds consider all cash accounts to be cash and cash equivalents. The central treasury, which holds cash and investments, is used essentially as a cash management pool by each fund.

Inventory

Inventories are valued at the lower of cost or market in the proprietary funds. Cost is determined by the first-in, first-out method. The cost is recorded as an expense at the time individual inventory items are consumed.

Receivables and Payables

Activity between funds that are representative of lending/borrowing arrangements outstanding at the end of the year are referred to as either "due to / from other funds" (i.e., the current portion of interfund loans) or "advances to / from other funds" (i.e., the noncurrent portion of interfund loans). All other outstanding balances between funds are reported as "due to / from other funds." Any residual balances outstanding between the governmental activities and business-type activities are reported in the government-wide financial statements as "internal balances."

Summary of Significant Accounting Policies, continued

Grants and Other Intergovernmental Revenues

In applying the measurable and available concepts to grants and intergovernmental revenues, the legal and contractual requirements of the numerous individual programs are used as guidance. There are, however, essentially two types of these revenues. In one, monies must be expended on the specific purpose or project before any amounts are considered "earned"; therefore, revenues are recognized based on expenditures recorded. In the other, monies are virtually unrestricted as to purpose of expenditure and are usually revocable only for failure to comply with prescribed compliance requirements. These resources are reflected as revenues at the time of receipt or earlier if the measurable and available criteria are met.

Interfund Transactions

During the course of normal operations, the City has numerous transactions between funds, including expenditures and transfers of resources to provide services, construct assets, and service debt. The accompanying financial statements generally reflect such transactions as transfers. Operating subsidies are also recorded as transfers.

Accrued Leave

All full-time employees are eligible for paid personal leave. Accrued leave is recorded as an expense in the government-wide and proprietary fund financial statements. A liability for these amounts is reported in the governmental fund financial statements only if they have matured (e.g. the employee has terminated employment).

Capital Assets

Capital assets, which include property, plant, and equipment, are reported in the applicable governmental or business-type activities columns in the government-wide financial statements. As a phase 3 government for GASB Statement 34 purposes, the City records additions to infrastructure capital assets (e.g. roads, sidewalks, etc.) prospectively from the GASB Statement 34 implementation date, which was June 30, 2003. Capital assets are defined by the City as assets with an initial, individual cost of more than $5,000 and an estimated useful life in excess of one year. Such assets are recorded at historical cost or estimated historical cost if purchased or constructed. Donated capital assets are recorded at estimated fair market value at the date of donation.

Major outlays for capital assets and improvements are capitalized as projects are constructed. Interest incurred during the construction phase of capital assets of business-type activities is included as part of the capitalized value of the assets constructed.

The costs of normal maintenance and repairs that do not add to the value of the asset or materially extend the useful life of the asset are not capitalized.

Summary of Significant Accounting Policies, continued

Capital Assets, continued

Property, plant, and equipment of the City is depreciated using the straight line method over the following estimated useful lives:

Buildings and improvements	25-40 years
Improvements other than buildings	10-25 years
Machinery and equipment	5-25 years

Long-Term Debt

In the government-wide and the proprietary fund financial statements, long-term debt and other long-term obligations are reported as liabilities in the applicable governmental activities, business-type activities, or proprietary fund type statement of net assets. Bond premiums and discounts, as well as issuance costs, are deferred and amortized over the life of the bonds using the straight-line method.

Fund Balances

In the fund financial statements, governmental funds report reservations of fund balance for amounts that are not available for appropriation or are legally restricted by outside parties for use for a specific purpose. Designations of fund balance represent tentative management plans that are subject to change.

Encumbrances

Encumbrance accounting, under which purchase orders, contracts and other commitments for expenditures are recorded in order to reserve that portion of the applicable appropriation, is employed as an extension of formal budgetary integration in the General Fund and Special Revenue Funds. Encumbrances outstanding at year end are reported as reservations of fund balances since they do not constitute expenditures or liabilities.

Deferred Grant Revenue

Amounts received from grantor agencies, which are restricted as to use and have not been expended for the intended use are shown as deferred revenue.

Pension Plan

All full-time permanent employees of the City participate in the Public Employees' Retirement System (PERS) administered by the State of Alaska.

Comparative Data

Comparative data for the prior year have been presented in some of the accompanying individual financial statements in order to provide an understanding of changes in the City's financial position and operations. Certain amounts in the prior year data have been reclassified to conform to the current year's presentation.

(2) **Cash and Investments**

The City of Kotzebue utilizes a central treasury that is available for use by all funds. Each fund's portion of the central treasury is displayed on the balance sheet as "Cash and investments", or is included in "Due to other funds."

Reconciliation of Deposit and Investment Balances

The following is a reconciliation of the City's deposit and investment balances to the financial statements at June 30, 2009.

Bank deposits	$ 1,325,546
Investments	939,703
	$ 2,265,249

Investments

Investment Policy

The City is authorized to invest in the following instruments. All securities purchased by the City and all other City investments must mature not later than the time indicated below, measured from the date of the City's investment transaction.

1. Obligations of, or obligations insured or guaranteed by the United States or an agency or instrumentality of the United States - three (3) years.

2. Certificates of deposit and other deposits at banks and savings and loans associations - three (3) years.

3. Federally insured deposits at banks and savings and loan associations - three (3) years.

4. Bonds and notes which are issued by a State or political subdivision thereof, or pursuant to the Tribal Tax Statutes Act 26 U.S.C. Sec. 7871 and which are rated AA or higher by a nationally recognized rating service - three (3) years.

5. Commercial paper issued by corporations and having the highest rating given by a nationally recognized rating service - two hundred seventy (270) days.

6. Bankers acceptances drawn on and accepted (a) at banks, all of whose debt issues are rated at least AA or its equivalent by a nationally recognized rating service or (b) if the bank is a subsidiary of one bank holding company, all of whose commercially held paper has the highest rating given by a nationally recognized rating service or whose debt issues meet the requirements in (a) above - one hundred eighty (180) days.

7. Money market mutual funds whose portfolio consists entirely of instruments - maturity date not applicable, which are U.S. government, or U.S. government guaranteed obligations, which have a constant net asset value.

Cash and Investments, continued
Investments, continued
Investment Policy, continued

8. Repurchase agreements, the securities underlying the agreement being any of the items listed in subsection 1 and 6 of this section which meet a margin requirement of 102%.

9. The Alaska Municipal League Investment Pool, made in accordance with terms of that Pool's "Common Investment Agreement."

Interest Rate Risk
Interest rate risk is the risk that changes in market interest rates will adversely affect the fair value of an investment. Generally, the longer the maturity of an investment, the greater the sensitivity of its fair value to changes in market interest rates.

Investment maturities in investments at June 30, 2009 are as follows:

		Investment Maturities (in Years)	
Investment Type	Fair Value	Less Than 1	1-5
Certificates of deposit	$ 652,985	549,524	103,461
Pooled investments	286,718		
Total investments	$ 939,703		

Credit Risk
Generally, credit risk is the risk that an issuer of an investment will not fulfill its obligation to the holder of the investment. This is measured by the assignment of a rating by a nationally recognized statistical rating organization. The City does not have any investments subject to credit risk.

Pooled investments are invested with the Alaska Municipal League Investment Pool, Inc. (AMLIP). The AMLIP is an external investment pool which is rated AAAm for credit risk purposes. Alaska Statute 37.23 establishes regulatory oversight of the Pool. The law sets forth numerous requirements regarding authorized investments and reporting. The share value of investments in the AMLIP is approximately equal to fair value.

(3) **Accounts Receivable and Valuation Allowance**

The City maintains accounts receivable balances of which a portion is reserved as an allowance for doubtful receivables. At June 30, 2009, receivables for the City's individual major funds and nonmajor funds in the aggregate, including applicable allowances for uncollectible accounts, are as follows:

	Major Governmental Fund General	Nonmajor Governmental Funds	Total Governmental Funds
Grants and shared revenues	$ 110,485	757	111,242
Sales tax	227,692	-	227,692
Other	106,675	-	106,675
Total receivables	$ 444,852	757	445,609

	Major Enterprise Funds		Total Enterprise Funds
	Water & Sewer	Refuse	
Accounts	$ 350,326	129,573	479,899
Grants	1,492,132	-	1,492,132
Total receivables	1,842,458	129,573	1,972,031
Less allowance for doubtful receivables	(199,140)	(77,554)	(276,694)
Net receivables	$ 1,643,318	52,019	1,695,337

Governmental funds report deferred revenue in connection with receivables for revenues that are not considered to be available to liquidate liabilities of the current period. Governmental funds also defer revenue recognition in connection with resources that have been received, but not yet earned. At June 30, 2009, the deferred revenue reported in the governmental funds was comprised of the following:

Delinquent sales taxes receivable (General Fund)	$ 63,073
Capital Grant Community Jails (General Fund)	53,799
Assistance to Firefighters Grant (non-major fund)	13,364
	$ 130,236

(4) **Capital Assets**

Capital asset activity for the year ended June 30, 2009 follows:

	Balance July 1, 2008	Additions and Reclass-ifications	Deletions and Reclass-ifications	Balance June 30, 2009
Governmental activities				
Capital assets not being depreciated -				
land and land improvements	$ 497,270	-	-	497,270
Capital assets being depreciated:				
Buildings	5,462,829	-	-	5,462,829
Machinery and equipment	1,979,755	85,061	(48,000)	2,016,816
Total assets being depreciated	7,442,584	85,061	(48,000)	7,479,645
Less accumulated depreciation for:				
Buildings	2,388,752	136,590	-	2,525,342
Machinery and equipment	1,376,164	118,202	(44,667)	1,449,699
Total accumulated depreciation	3,764,916	254,792	(44,667)	3,975,041
Total capital assets being depreciated, net	3,677,668	(169,731)	(3,333)	3,504,604
Governmental activity capital assets, net	$ 4,174,938	(169,731)	(3,333)	4,001,874
Business-type activities				
Capital assets not being depreciated:				
Land	$ 230,983	-	-	230,983
Construction in progress	2,419,033	5,379,761	-	7,798,794
Total assets not being depreciated	2,650,016	5,379,761	-	8,029,777
Capital assets being depreciated:				
Buildings	2,381,895	-	-	2,381,895
Improvements other than buildings	69,176,614	49,234	-	69,225,848
Machinery and equipment	2,157,816	361,737	(121,245)	2,398,308
Total assets being depreciated	73,716,325	410,971	(121,245)	74,006,051
Less accumulated depreciation for:				
Buildings	817,630	79,400	-	897,030
Improvements other than buildings	45,499,439	1,568,767	-	47,068,206
Machinery and equipment	1,559,118	96,041	(101,615)	1,553,544
Total accumulated depreciation	47,876,187	1,744,208	(101,615)	49,518,780
Total capital assets being depreciated, net	25,840,138	(1,333,237)	(19,630)	24,487,271
Business-type activity capital assets, net	$ 28,490,154	4,046,524	(19,630)	32,517,048

Capital Assets, continued

Depreciation expense was charged to the functions as follows:

Governmental activities	
General government	$ 22,073
Public safety	139,084
Public works	54,897
Adult Center operations	38,738
Total depreciation expense – governmental activities	254,792
Business-type activities	
Water and sewer utility	1,601,631
Refuse	112,973
Total depreciation expense – business-type activities	1,714,604
Total depreciation expense	$ 1,969,396

(5) **Interfund Receivables, Payables, and Transfers**

A schedule of interfund balances and transfers for the year ended June 30, 2009, follows:

Due from other funds:	
Due to the General Fund from the Refuse Enterprise Fund to cover operating costs	$ 66,571
Due to the General Fund from nonmajor governmental funds for advances to cover capital costs	20,830
Total amount due from other funds	$ 87,401
Transfers:	
From the General Fund to a nonmajor governmental fund to cover operating costs	$ 66,531
From Gaming Special Revenue Fund to a nonmajor governmental fund to cover operating costs	78,000
Total transfers to other funds	$ 144,531

(6) **Long-Term Debt**

The following is a summary of long-term debt transactions of the City for the year ended June 30, 2009:

Governmental activities	Balance July 1, 2008	Additions	Retired	Balance June 30, 2009	Due Within One Year
Accrued leave	$ 261,416	392,930	381,587	272,759	272,759
Net pension/OPEB obligation	103,001	-	103,001	-	-
Total governmental activities	$ 364,417	392,930	484,588	272,759	272,759

The long-term liabilities related to governmental activities are generally liquidated by the General Fund.

Business-type activities	Balance July 1, 2008	Additions	Retired	Balance June 30, 2009	Due Within One Year
Accrued leave	$ 56,025	82,472	86,001	52,496	52,496
Net pension/OPEB obligation	23,297	-	23,297	-	-
Total business-type activities	$ 79,322	82,472	109,298	52,496	52,496

(7) **Municipal Landfill Closure and Postclosure Liability**

State and federal laws and regulations require the City to place a final cover on its landfill site when it stops accepting waste and to perform certain maintenance and monitoring functions at the site for 30 years after closure. Although closure and postclosure care costs will be paid only near or after the date the landfill stops accepting waste, generally accepted accounting principles require that the City report a portion of these closure and postclosure care costs each period based on landfill capacity used as of each balance sheet date.

The City received approximately 20,000 cubic yards of free cover material during 2006 as a result of a State airport expansion project. The City also had 5,000 cubic yards of gravel stockpiled from prior years. With the above materials on hand, City management estimated the remaining future closure costs to be $752,761. During 2009, actual costs for cover materials of $11,222 were incurred and charged against the liability leaving a remaining estimated liability of $741,539 at June 30, 2009. Management also estimates that two of the three existing cells are approximately 100% full and the other cell is approximately 75% full, resulting in an estimated liability at June 30, 2009 of $590,987, an increase over the prior year of $26,416. The City will recognize the remaining estimated cost of the closure of $150,552 as the remaining expected usage is filled. These amounts are based on what it would cost to perform the closure in 2009. Actual costs may be higher due to inflation, changes in technology or changes in regulations. The remaining life of the cells currently being used is estimated to be approximately 4 years.

(8) **Defined Benefit Pension Plan**

The City participates in the Public Employees' Retirement System (PERS). PERS was originally established as an agent multiple employer plan, but was converted by legislation to a cost-sharing plan, effective July 1, 2008. The plan was established and is administered by the State of Alaska Department of Administration to provide pension, postemployment healthcare, death, and disability benefits. Benefit and contribution provisions are established by State law and may be amended only by the State Legislature.

The plan is included in a comprehensive annual financial report that includes financial statements and other required supplemental information. The report is available at the following address:

Department of Administration
Division of Retirement and Benefits
P.O. Box 110203
Juneau, Alaska 99811-0203

Conversion to Cost Sharing

In April 2008 the Alaska Legislature passed Senate Bill (SB) 125 which converted the existing Public Employees Retirement System (PERS) from an agent-multiple employer plan to a cost-sharing plan with an effective date of July 1, 2008. Under the cost-sharing arrangement, the State of Alaska Division of Retirement and Benefits will no longer track individual employer assets and liabilities. Rather, all plan costs and past service liabilities will be shared among all participating employers. The cost-sharing plan will require a uniform employer contribution rate of 22% or less of active member wages, subject to a wage floor. In addition, the legislation provides for State contributions in the event that the annually calculated and board adopted rate, which includes a provision to pay down the past-service liability, exceeds 22%. Any such additional contributions will be recognized by each employer as an on-behalf payment.

In addition, in fiscal year 2008, the State of Alaska passed legislation (SB 123) which requires that the employer contribution be calculated on all PERS eligible wages, including wages attributable to the defined contribution plan described later in these footnotes.

As a result of the conversion to cost-sharing, the City will not be obligated to pay or to continue amortizing any prior recorded Net Pension/OPEB obligation. Accordingly, the City has written off its June 30, 2008 net pension/OPEB obligation and has recognized a special item (gain) in the amount of $126,298 in these financial statements.

Funding Policy

Regular employees are required to contribute 6.75% of their annual covered salary (2.09% for pension and 4.66% for healthcare). Police and firefighters are required to contribute 7.5% of their annual covered salary (2.32% for pension and 5.18% for healthcare). The funding policy provides for periodic employer contributions based on actuarially determined rates that, expressed as a percentage of annual covered payroll, are sufficient to accumulate sufficient assets to pay both pension and postemployment healthcare benefits when due.

Defined Benefit Pension Plan, continued

Funding Policy, continued

Under the recently adopted cost sharing arrangement, the employer contribution rate is statutorily capped at 22%, although State legislation currently provides that the State of Alaska will contribute any amount over 22% such that the total contribution equals the Alaska Retirement Management Board adopted rate. This rate will be consistent with the actuarially determined rate, but not the same as the Governmental Accounting Standards Board (GASB) Statement 45 accounting rate.

The City's contribution rates for 2009 were determined as part of the June 30, 2006 actuarial valuation and are as follows:

	Contractual Rate	ARM Board Adopted Rate	GASB 45* Rate
Pension	6.82%	10.91%	8.47%
Postemployment healthcare	15.18%	24.31%	37.25%
Total contribution rate	22.00%	35.22%	45.72%

*Using the 4.5% OPEB discount rate and disregarding future Medicare Part D payments.

Valuation Date	June 30, 2008
Actuarial Cost Method	Entry age normal Level percentage of pay for pension Level dollar for healthcare
Amortization Method	Level dollar, closed
Equivalent Single Amortization Period	20 years
Asset Valuation Method	5-year smoothed market
Investment Rate of Return	8.25% pension, 4.5% healthcare
Salary Scale	*Peace Officers/Firefighters* Merit: 2.5% per year for first 6 years, 0.5% thereafter Productivity: 0.5% per year *Others* Merit: 5.5% per year grading down to 1.5% after 5 years, for more than 6 years of service, 1.0% grading down to 0% Productivity: 0.5% per year
Payroll Growth	4.0%
Inflation	3.5%

Defined Benefit Pension Plan, continued

Funding Policy, continued

Health Cost Trend	Medical: 8.0% in FY09 trending downward by variable amounts to 5.9% in FY15, 5.8% through FY25, 5.7% through FY50, and 5.1% through FY100 Prescription Drugs: 10.8% in FY09 trending downward by variable amounts to 5.9% in FY15, 5.8% through FY25, 5.7% through FY50 and 5.1% through FY100

The State of Alaska Public Employees' Retirement System retiree healthcare benefits are partially funded. The PERS plan uses the percentage of ARC methodology in the development of the investment rate of return.

The projection of future benefits for an ongoing plan involves estimates of the value of reported amounts and assumptions about the probability of occurrence of events far into the future. Examples include assumptions about future employment, mortality, and the healthcare cost trend. Amounts determined regarding the funded status of the plan and the annual required contributions of the employer are subject to continual revision as actual results are compared with past expectations and new estimates are made about the future.

Projections of benefits are based on the substantive plan (the plan as understood by the employer and plan members) and include the types of benefits in force at the valuation date and the pattern of sharing benefit costs between the City and the plan members at that point. Actuarial calculations reflect a long-term perspective and employ methods and assumptions that are designed to reduce short-term volatility in actuarial accrued liabilities and the actuarial values of assets.

Projected benefits for financial reporting purposes do not incorporate any potential effects of legal or contractual funding limitations.

Annual Pension and Postemployment Healthcare Cost

The City is required to contribute 22% of covered payroll, subject to a wage floor. In addition, the State of Alaska contributed approximately 13.22% of covered payroll to the Plan. In accordance with the provisions of GASB Statement Number 24, the City has recorded the State contribution in the amount of $508,342 as a PERS on-behalf payment. However, because the City is not statutorily obligated for these payments, this amount is excluded from pension and OPEB cost as described here. Only one year of information is available at this time.

Defined Benefit Pension Plan, continued

Annual Pension and Postemployment Healthcare Cost, continued

Year Ended June 30	Annual Pension Cost	Annual OPEB Cost	Total Benefit Cost (TBC)	City Contri-butions	% of TBC Contributed
2009	$ 214,431	$ 477,282	$ 691,713	$ 691,713	100%

(9) **Defined Contribution Pension Plan**

The State of Alaska Legislature approved Senate Bill 141 to create the Public Employees' Retirement System (PERS) Tier IV for employees hired after July 1, 2006 or for employees converting from the PERS Tier I, II or III defined benefit plans. The plan is administered by the State of Alaska, Department of Administration, and benefit and contribution provisions are established by State law and may be amended only by the State Legislature. The Alaska Retirement Management Board may also amend contribution requirements. Included in the plan are individual pension accounts, retiree medical insurance plan and a separate Health Reimbursement Arrangement account that will help retired members pay medical premiums and other eligible medical expenses not covered by the medical plan. Employees are required to contribute 8.0% of their annual covered salary and the City is required to make the following contributions:

	Others Tier IV	Police/Fire Tier IV
Individual account	5.00%	5.00%
Health reimbursement arrangement (HRA) *	3.00	3.00
Retiree medical plan	0.99	0.99
Occupational death and disability benefits	0.58	1.33
	9.57 %	10.32%

*Health Reimbursement Arrangement – AS 39.30.370 requires that the employer contribute "an amount equal to three percent of the average employer's average annual employee compensation." For actual remittance, this amount is calculated as a flat rate for each full time or part-time employee per pay period.

Employees are immediately vested in their own contributions and vest 25% per year in employer contributions. The City and employee contributions to PERS including the HRA contribution for the year ended June 30, 2009 were $68,450 and $56,749, respectively.

(10) **Deferred Compensation Plan**

The City offers its employees a deferred compensation plan created in accordance with Internal Revenue Code Section 457. The plan, available to all full-time employees, permits them to defer a portion of their salary until future years. The deferred compensation is not available to employees until termination, retirement, death, or unforeseeable emergency. In accordance with the Internal Revenue Code, all assets and income of the plan are held in trust for the exclusive benefit of participants and their beneficiaries.

(11) **Risk Management**

The City faces a considerable number of risks of loss, including (a) damage to and loss of property and contents, (b) employee torts, (c) professional liability; i.e., errors and omissions, (d) environmental damage, (e) workers' compensation; i.e., employee injuries, and (f) medical insurance costs of employees. Commercial policies, transferring the risk of loss, except for relatively small deductible amounts, are purchased for employee medical costs. The City participates in the Alaska Municipal League Joint Insurance Association (AML/JIA) which provides insurance coverage for property and contents damage, torts, general and automobile liability, and workers' compensation. The City has no coverage for potential losses from environmental pollution damages. The AML/JIA is a public entity risk pool organized to share risks among its members. The Association's bylaws provide for the assessment of supplemental contributions from members in the event that losses and expenses for any coverage year exceed the annual contributions and income earned on such contributions for the year. Such supplemental contributions shall be based upon each member's annual deposit contribution in comparison to the aggregate annual deposit contributions of all members. The Association made no supplemental assessments during the year ended June 30, 2009. Coverage limits and the deductibles on the policies have stayed relatively constant for the last several years.

(12) **Contingencies**

Grants

Amounts received or receivable from granting agencies are subject to audit and adjustment by the granting agency. Any disallowed grant expenditures, including amounts already collected, would become a liability of the City.

The City, in the normal course of its activities, is involved in various claims and litigation. In the opinion of management and the City's legal counsel, the disposition of these matters is not expected to have a material adverse effect on the City's financial statements.

SUPPLEMENTARY INFORMATION

Exhibit E-1

CITY OF KOTZEBUE, ALASKA
Nonmajor Governmental Funds
Combining Balance Sheet
June 30, 2009

Assets	Special Revenue Fund	Capital Project Funds		Total Nonmajor Governmental Funds
	Adult Center	City Match	ANTHC Projects	
Cash and investments	$ 17,649	41,604	-	59,253
Grants receivable	-	-	757	757
Total assets	17,649	41,604	757	60,010
Liabilities and Fund Balances				
Liabilities:				
Accounts payable	7,455	4,252	-	11,707
Accrued payroll and payroll liabilities	10,194	-	-	10,194
Deferred revenue	-	13,364		13,364
Due to other funds	-	-	20,830	20,830
Total liabilities	17,649	17,616	20,830	56,095
Fund balances (deficit) - unreserved	-	23,988	(20,073)	3,915
Total liabilities and fund balances	$ 17,649	41,604	757	60,010

Exhibit E-2

CITY OF KOTZEBUE, ALASKA
Nonmajor Governmental Funds
Combining Statement of Revenues, Expenditures and
Changes in Fund Balances (Deficit)
Year Ended June 30, 2009

	Special Revenue Fund	Capital Project Funds		Total Nonmajor Governmental Funds
	Adult Center	City Match	ANTHC Projects	
Revenues:				
Adult Center	$ 98,309	-	-	98,309
State of Alaska	5,083	-	-	5,083
Federal government	-	99,724	164,155	263,879
Total revenues	103,392	99,724	164,155	367,271
Expenditures:				
Adult Center operations	247,923	-	-	247,923
Public safety	-	104,973	-	104,973
Capital outlay	-	-	164,155	164,155
Total expenditures	247,923	104,973	164,155	517,051
Excess of revenues over (under) expenditures	(144,531)	(5,249)	-	(149,780)
Other financing sources - transfers in	144,531	-	-	144,531
Net change in fund balances	-	(5,249)	-	(5,249)
Fund balances (deficit), beginning of year	-	29,237	(20,073)	9,164
Fund balances (deficit), end of year	$ -	23,988	(20,073)	3,915

GENERAL FUND

The General Fund accounts for the financial operations of City of Kotzebue which are not accounted for in any other fund. Principal sources of revenues are intergovernmental revenues, charges for services, and sales tax. Primary expenditures in the General Fund are for general government, public safety and public works.

Exhibit F-1

CITY OF KOTZEBUE, ALASKA
General Fund
Balance Sheet
June 30, 2009
(With Comparative Amounts for 2008)

	2009	2008
Assets		
Cash and investments	$ 583,296	1,269,959
Receivables:		
Grants and shared revenues	110,485	92,794
Sales tax	227,692	224,374
Other	106,675	161,082
Total receivables	444,852	478,250
Prepaid items	21,000	-
Due from other funds	87,401	160,798
Total assets	$ 1,136,549	1,909,007
Liabilities and Fund Balance		
Liabilities:		
Accounts payable	101,308	73,202
Accrued payroll and payroll liabilities	164,218	185,741
Deferred revenue	116,872	58,575
Total liabilities	382,398	317,518
Fund balance:		
Reserved:		
Encumbrances	15,727	15,727
Prepaid items	21,000	-
Unreserved:		
Designated for subsequent year's expenditures	-	163,186
Undesignated	717,424	1,412,576
Total fund balance	754,151	1,591,489
Total liabilities and fund balance	$ 1,136,549	1,909,007

Exhibit F-2

CITY OF KOTZEBUE, ALASKA
General Fund
Schedule of Revenues, Expenditures, and Changes in
Fund Balance - Budget and Actual
Year Ended June 30, 2009
(With Comparative Amounts for 2008)

	2009			2008
	Budget	Actual	Variance Positive (Negative)	Actual
Revenues:				
Taxes:				
Sales tax	$ 3,255,000	3,233,926	(21,074)	2,896,490
Hotel and bed tax	50,000	50,242	242	48,362
Alcohol use tax	40,000	35,639	(4,361)	38,084
Penalties and interest	29,000	12,642	(16,358)	13,541
Total taxes	3,374,000	3,332,449	(41,551)	2,996,477
Intergovernmental:				
Federal government:				
Local law enforcement grants	70,000	84,728	14,728	62,519
Asset forfeitures	50	27	(23)	37,112
Total federal government	70,050	84,755	14,705	99,631
State of Alaska:				
Jail contract	880,000	879,929	(71)	879,929
Telephone and electric	70,000	68,675	(1,325)	69,016
PERS relief	259,498	416,840	157,342	259,496
State revenue sharing	259,000	257,562	(1,438)	220,821
Total State of Alaska	1,468,498	1,623,006	154,508	1,429,262
Total intergovernmental	1,538,548	1,707,761	169,213	1,528,893
Charges for services:				
Administration fees	545,000	525,012	(19,988)	545,976
Ambulance services	340,000	302,634	(37,366)	258,226
Total charges for services	885,000	827,646	(57,354)	804,202
Investment income	36,000	37,074	1,074	115,292

CITY OF KOTZEBUE, ALASKA
General Fund
Schedule of Revenues, Expenditures and Changes in
Fund Balance - Budget and Actual, continued

	2009			2008
	Budget	Actual	Variance Positive (Negative)	Actual
Revenues, continued:				
Other revenues:				
Permits, licenses and fines	$ 5,900	10,898	4,998	11,150
Community activities	7,000	8,775	1,775	14,815
Other rentals and leases	12,382	13,464	1,082	12,382
Alarms monitoring	18,500	17,209	(1,291)	14,350
Other	76,084	41,459	(34,625)	20,011
Total other revenues	119,866	91,805	(28,061)	72,708
Total revenues	5,953,414	5,996,735	43,321	5,517,572
Expenditures:				
General government:				
City council and clerk:				
Personnel	119,240	131,654	(12,414)	107,360
Books and publications	-	579	(579)	867
Supplies	1,150	1,104	46	165
Other services and charges	1,750	2,241	(491)	2,408
Telephone	1,679	1,679	-	1,452
Travel and per diem	20,000	19,258	742	19,146
Training	850	850	-	1,500
Dues and memberships	2,000	5,512	(3,512)	3,781
Insurance	5,729	5,729	-	5,707
Advertising	1,000	1,820	(820)	1,508
Total City council and clerk	153,398	170,426	(17,028)	143,894
Administration:				
Personnel	644,308	668,599	(24,291)	566,766
Electricity	8,000	7,682	318	7,775
Heating fuel	16,000	11,382	4,618	8,482
Books and publications	1,800	1,750	50	151
Supplies	15,500	16,835	(1,335)	15,656
Other services and charges	7,800	6,937	863	6,710
Telephone	11,700	11,729	(29)	12,383
Travel and per diem	10,000	7,064	2,936	22,839
Training	500	390	110	1,580
Ambulance 3rd party billing fees	27,000	27,583	(583)	15,283

CITY OF KOTZEBUE, ALASKA
General Fund
Schedule of Revenues, Expenditures and Changes in
Fund Balance - Budget and Actual, continued

	2009			2008
	Budget	Actual	Variance Positive (Negative)	Actual
Expenditures, continued:				
General government, continued:				
Administration, continued:				
Dues and memberships	$ 500	350	150	375
Postage	5,000	4,685	315	9,850
Other consulting	8,000	8,351	(351)	7,263
Auditing and accounting	32,065	32,062	3	26,485
Legal	74,360	85,341	(10,981)	131,596
Insurance	30,392	30,392	-	34,960
Lobbying	124,250	124,649	(399)	104,336
Repairs and maintenance	46,900	32,967	13,933	51,138
Equipment and capital outlay	4,300	5,483	(1,183)	13,442
Total administration	1,068,375	1,084,231	(15,856)	1,037,070
Total general government	1,221,773	1,254,657	(32,884)	1,180,964
Public safety:				
Police:				
Personnel	932,878	977,516	(44,638)	776,658
Electricity	7,000	5,935	1,065	6,294
Forfeiture funds	20,000	19,884	116	19,688
Heating fuel	25,000	19,959	5,041	4,532
Clothing	6,000	5,081	919	2,605
Supplies	16,000	14,599	1,401	11,387
Other services and charges	2,350	2,303	47	1,039
Telephone	9,262	9,263	(1)	10,475
Travel and per diem	10,000	10,806	(806)	7,799
Training	900	725	175	1,965
Dues and memberships	600	519	81	250
Consulting	3,000	3,000	-	1,065
Insurance	58,704	58,704	-	59,508
Advertising	1,000	670	330	710
Repairs and maintenance	50,000	37,618	12,382	37,379
Equipment and capital outlay	4,500	4,852	(352)	3,328
Animal control	2,500	1,727	773	1,471
Total police	1,149,694	1,173,161	(23,467)	946,153

CITY OF KOTZEBUE, ALASKA
General Fund
Schedule of Revenues, Expenditures and Changes in
Fund Balance - Budget and Actual, continued

	2009			2008
	Budget	Actual	Variance Positive (Negative)	Actual
Expenditures, continued:				
Public safety, continued:				
Jail:				
Personnel	$ 837,220	853,649	(16,429)	707,828
Electricity	11,000	10,563	437	10,691
Heating fuel	62,358	58,973	3,385	48,294
Supplies	65,000	65,000	-	70,014
Other services and charges	200	175	25	701
Clothing	2,000	2,092	(92)	2,543
Telephone	8,065	5,879	2,186	5,443
Travel and per diem	6,500	6,178	322	5,382
Training	500	361	139	580
Television	500	354	146	236
Dues and memberships	1,500	1,500	-	492
Consulting	4,500	4,500	-	1,920
Insurance	49,715	49,715	-	54,788
Repairs and maintenance	14,635	10,040	4,595	12,112
Equipment and capital outlay	3,000	2,554	446	1,281
Total jail	1,066,693	1,071,533	(4,840)	922,305
Fire and emergency medical services:				
Personnel	696,114	686,955	9,159	566,063
Electricity	8,000	7,595	405	7,965
Heating fuel	67,000	68,796	(1,796)	43,570
Supplies	2,300	2,593	(293)	2,363
Other services and charges	300	284	16	131
Clothing	2,100	2,053	47	1,547
Telephone	4,100	4,375	(275)	3,495
Travel and per diem	5,000	4,592	408	3,135
Training	3,000	2,262	738	952
Insurance	39,634	39,634	-	37,780
Repairs and maintenance	30,500	25,695	4,805	18,112
Equipment and capital outlay	3,000	4,216	(1,216)	4,242
Total fire and emergency medical services	861,048	849,050	11,998	689,355
Total public safety	3,077,435	3,093,744	(16,309)	2,557,813

CITY OF KOTZEBUE, ALASKA
General Fund
Schedule of Revenues, Expenditures and Changes in
Fund Balance - Budget and Actual, continued

	2009			2008
	Budget	Actual	Variance Positive (Negative)	Actual
Expenditures, continued:				
Public works:				
Public works:				
Personnel	$ 1,058,615	1,124,038	(65,423)	843,388
Street lighting	23,500	28,275	(4,775)	25,588
Electricity	11,300	11,162	138	13,260
Heating fuel	140,000	145,124	(5,124)	90,615
Supplies	3,500	3,366	134	3,534
Other services and charges	900	827	73	610
Sign replacement	1,000	-	1,000	2,482
Clothing	1,000	996	4	1,932
Telephone	6,000	4,884	1,116	5,857
Travel and per diem	5,000	4,372	628	4,775
Training	2,000	1,125	875	1,050
Dues and memberships	10	10	-	10
Professional services	4,000	9,410	(5,410)	4,200
Insurance	61,021	66,682	(5,661)	56,312
Repairs and maintenance	459,344	456,869	2,475	171,380
Gravel	1,736	1,735	1	7,350
Equipment and capital outlay	6,131	7,778	(1,647)	6,610
Total public works	1,785,057	1,866,653	(81,596)	1,238,953
Capital projects:				
Personnel	245,732	274,607	(28,875)	192,893
Supplies	4,800	4,779	21	3,459
Other services and charges	513	3,891	(3,378)	541
Telephone	1,200	1,183	17	800
Travel and per diem	2,000	1,313	687	2,650
Training	500	495	5	-
Professional services	7,500	7,500	-	3,588
Insurance	8,986	8,986	-	9,401
Repairs and maintenance	4,800	3,621	1,179	2,941
Equipment and capital outlay	500	339	161	604
Total capital projects	276,531	306,714	(30,183)	216,877
Total public works	2,061,588	2,173,367	(111,779)	1,455,830

CITY OF KOTZEBUE, ALASKA
General Fund
Schedule of Revenues, Expenditures and Changes in
Fund Balance - Budget and Actual, continued

	2009			2008
	Budget	Actual	Variance Positive (Negative)	Actual
Expenditures, continued:				
Community services:				
Community activities	$ 30,000	24,071	5,929	26,834
4th of July expense	7,500	7,568	(68)	10,525
Heating fuel - Recreation Center	70,000	74,911	(4,911)	39,697
Total community services	107,500	106,550	950	77,056
Nondepartmental:				
Capital purchases	77,980	46,985	30,995	-
Employee benefits	58,000	92,239	(34,239)	29,962
Accounting software	-	-	-	61,990
Hazmat training	-	-	-	40,000
Park and pool tables	-	-	-	13,182
Elder lots fence	-	-	-	17,089
Total nondepartmental	135,980	139,224	(3,244)	162,223
Total expenditures	6,604,276	6,767,542	(163,266)	5,433,886
Excess of revenues over (under) expenditures	(650,862)	(770,807)	(119,945)	83,686
Other financing uses - transfers out	(67,682)	(66,531)	1,151	(1,622)
Net change in fund balance	$ (718,544)	(837,338)	(118,794)	82,064
Fund balance, beginning of year		1,591,489		1,509,425
Fund balance, end of year		$ 754,151		1,591,489

SPECIAL REVENUE FUNDS

These funds account for revenues from specific sources that are designated to finance particular functions and activities.

Gaming - This fund accounts for the bingo and pulltab gaming activities.

Adult Center - This fund accounts for the activities of the Adult Center located in the Recreation Center building.

Exhibit G-1

CITY OF KOTZEBUE, ALASKA
Gaming Special Revenue Fund
Schedule of Revenues, Expenditures and
Changes in Fund Balance - Budget and Actual
Year Ended June 30, 2009
(With Comparative Amounts for 2008)

	2009			2008
	Budget	Actual	Variance Positive (Negative)	Actual
Revenues:				
Bingo and pull tabs	$ 1,245,125	1,243,535	(1,590)	1,351,548
State of Alaska - PERS relief	4,217	10,167	5,950	-
Total revenues	1,249,342	1,253,702	4,360	1,351,548
Expenditures:				
Personnel	155,028	151,494	3,534	140,183
Rent	30,800	29,150	1,650	30,250
Supplies	24,500	23,573	927	28,963
Payouts to winners	877,963	881,886	(3,923)	954,901
Donations	50,000	50,000	-	50,000
Insurance	6,411	6,411	-	-
Allocated administration	18,200	18,204	(4)	19,392
Other	8,440	8,339	101	16,485
Total expenditures	1,171,342	1,169,057	2,285	1,240,174
Excess of revenues over expenditures	78,000	84,645	6,645	111,374
Other financing uses - transfers out	(78,000)	(78,000)	-	(70,577)
Net change in fund balance	$ -	6,645	6,645	40,797
Fund balance, beginning of year		91,724		50,927
Fund balance, end of year		$ 98,369		91,724

Exhibit G-2

CITY OF KOTZEBUE, ALASKA
Adult Center Special Revenue Fund
Schedule of Revenues, Expenditures and
Changes in Fund Balance - Budget and Actual
Year Ended June 30, 2009
(With Comparative Amounts for 2008)

	2009			2008
	Budget	Actual	Variance Positive (Negative)	Actual
Revenues:				
Memberships	$ 14,000	16,495	2,495	12,432
Food and beverages	28,500	28,510	10	27,086
Rent	30,800	26,950	(3,850)	30,250
Intergovernmental - State PERS relief	2,185	5,083	2,898	-
Special events	3,750	3,180	(570)	4,767
Donations	-	23,174	23,174	-
Total revenues	79,235	103,392	24,157	74,535
Expenditures:				
Personnel	89,674	111,903	(22,229)	76,264
Utilities	85,000	87,190	(2,190)	25,267
Supplies	22,650	21,370	1,280	21,895
Other services and charges	2,000	2,099	(99)	1,978
Insurance	8,400	8,238	162	8,332
Repairs and maintenance	17,193	17,123	70	11,376
Total expenditures	224,917	247,923	(23,006)	145,112
Excess of revenues over (under) expenditures	(145,682)	(144,531)	1,151	(70,577)
Other financing sources - transfers in	145,682	144,531	(1,151)	70,577
Net change in fund balance	$ -	-	-	-
Fund balance, beginning of year		-		-
Fund balance, end of year	$	-		-

ENTERPRISE FUNDS

Enterprise Funds account for operations that are financed and operated in a manner similar to private business operations.

Water and Sewer Utility - This fund accounts for the operations of the water and sewer system.

Refuse - This fund accounts for the operations of the refuse collection service, baler and balefill.

Exhibit H-1

CITY OF KOTZEBUE, ALASKA
Water and Sewer Utility Enterprise Fund
Statement of Net Assets
June 30, 2009
(With Comparative Amounts for 2008)

Assets		2009	2008
Current assets:			
Cash and investments	$	1,514,838	1,862,359
Receivables:			
Accounts		350,326	349,705
Allowance for doubtful receivables		(199,140)	(147,231)
Grants		1,492,132	1,156,612
Net receivables		1,643,318	1,359,086
Total current assets		3,158,156	3,221,445
Property, plant, and equipment:			
Improvements other than buildings		67,125,715	67,076,481
Machinery and equipment		1,472,332	1,231,840
Construction in progress		7,798,794	2,419,033
Total property, plant, and equipment		76,396,841	70,727,354
Accumulated depreciation		(45,791,880)	(44,262,260)
Net property, plant, and equipment		30,604,961	26,465,094
Total assets	$	33,763,117	29,686,539
Liabilities and Net Assets			
Liabilities:			
Current liabilities:			
Accounts payable		773,260	576,978
Accrued payroll and payroll liabilities		23,542	23,606
Accrued leave		32,385	30,969
Deferred revenue		10,467	8,622
Deposits		195	195
Total current liabilities		839,849	640,370
Net pension/OPEB obligation		-	14,476
Total liabilities		839,849	654,846
Net assets:			
Invested in capital assets		30,604,961	26,465,094
Unrestricted		2,318,307	2,566,599
Total net assets		32,923,268	29,031,693
Total liabilities and net assets	$	33,763,117	29,686,539

Exhibit H-2

CITY OF KOTZEBUE, ALASKA
Water and Sewer Utility Enterprise Fund
Statement of Revenues, Expenses and Changes in Net Assets
Year Ended June 30, 2009
(With Comparative Amounts for 2008)

	2009	2008
Operating revenues:		
Water use charges and connect fees	$ 1,211,749	1,237,527
Sewer use charges and connect fees	523,900	550,605
Penalties and interest	20,344	21,285
Total operating revenues	1,755,993	1,809,417
Operating expenses:		
Administration:		
Postage	2,127	1,037
Credit card charges	18,236	14,277
Allocated administrative fees	338,304	353,592
Total administration	358,667	368,906
Water:		
Personnel	387,416	316,433
Electricity	121,810	116,488
Heating fuel	384,109	303,948
Building maintenance	9,332	345
Supplies	205,832	156,324
Telephone	5,828	7,209
Travel	1,587	1,461
Training	430	545
Professional services	49,559	43,563
Insurance	39,576	37,955
Repairs and maintenance	6,363	6,868
Other	1,763	528
Total water	1,213,605	991,667

CITY OF KOTZEBUE, ALASKA
Water and Sewer Utility Enterprise Fund
Statement of Revenues, Expenses and Changes in Net Assets, continued

		2009	2008
Operating expenses, continued:			
Sewer:			
Personnel	$	324,164	266,263
Electricity		47,252	51,050
Supplies		43,474	46,603
Travel		1,303	2,068
Training		370	130
Professional services		1,300	5,300
Insurance		25,648	24,251
Repairs and maintenance		64,505	40,955
Capital outlay		6,384	-
Other		1,779	677
Total sewer		516,179	437,297
Depreciation		1,601,631	1,696,929
Total operating expenses		3,690,082	3,494,799
Loss from operations		(1,934,089)	(1,685,382)
Nonoperating revenues:			
Investment income		-	19,101
Equipment rental		7,625	9,750
Equipment sales		1,014	2,702
State PERS relief		61,001	-
Miscellaneous revenue		50	100
Total nonoperating revenues		69,690	31,653
Loss before contributions and special item		(1,864,399)	(1,653,729)
Capital contributions		5,741,498	3,071,088
Special item - write off of NPO/OPEB		14,476	-
Change in net assets		3,891,575	1,417,359
Net assets, beginning of year		29,031,693	27,614,334
Net assets, end of year	$	32,923,268	29,031,693

Exhibit H-3

CITY OF KOTZEBUE, ALASKA
Water and Sewer Utility Enterprise Fund
Statement of Cash Flows
Year Ended June 30, 2009
(With Comparative Amounts for 2008)

		2009	2008
Cash flows from operating activities:			
Receipts from customers and users	$	1,809,126	1,822,887
Other miscellaneous receipts		8,689	12,552
Payments to suppliers		(842,285)	(594,077)
Payments to employees		(649,227)	(589,761)
Payments for interfund services used		(338,304)	(353,592)
Net cash flows from operating activities		(12,001)	298,009
Cash flows from capital and related financing activities:			
Acquisition and construction of capital assets		(5,741,498)	(3,071,088)
Capital contributions received		5,405,978	2,222,682
Net cash flows from capital and related financing activities		(335,520)	(848,406)
Cash flows from investing activities - investment income received		-	19,101
Net decrease in cash and investments		(347,521)	(531,296)
Cash and investments, beginning of year		1,862,359	2,393,655
Cash and investments, end of year	$	1,514,838	1,862,359
Reconciliation of loss from operations to net cash provided (used) by operating activities:			
Loss from operations		(1,934,089)	(1,685,382)
Adjustments to reconcile loss from operations to net cash flows from operating activities:			
Miscellaneous nonoperating revenues		8,689	12,552
Noncash expense - PERS relief		61,001	-
Increase in allowance for doubtful accounts		51,909	-
Depreciation		1,601,631	1,696,929
(Increase) decrease in assets - accounts receivable		(621)	6,111
Increase (decrease) in liabilities:			
Accounts payable		196,282	267,505
Accrued payroll and payroll liabilities		(64)	3,752
Accrued leave		1,416	(10,817)
Deposits		-	1
Deferred revenue		1,845	7,358
Net cash flows from operating activities	$	(12,001)	298,009

Exhibit H-4

CITY OF KOTZEBUE, ALASKA
Water and Sewer Utility Enterprise Fund
Combining Schedule of Water and Sewer Capital Projects
Year Ended June 30, 2009

		Sewage Lagoon Upgrade	2005 Sanitation Utilities Develop-ment	2007 Sanitation Utilities Develop-ment	2008 Sanitation Utilities Develop-ment	Totals
Funding sources:						
Federal government	$	43,489	23,257	3,901,861	236,688	4,205,295
State of Alaska		14,496	7,752	1,300,620	78,896	1,401,764
Other		-	-	114,439	-	114,439
Total funding sources	$	57,985	31,009	5,316,920	315,584	5,721,498
Expenditures - capital outlay	$	57,985	31,009	5,316,920	315,584	5,721,498

Exhibit H-5

CITY OF KOTZEBUE, ALASKA
Refuse Enterprise Fund
Statement of Net Assets
June 30, 2009
(With Comparative Amounts for 2008)

Assets		2009	2008
Current assets:			
Cash and investments	$	-	22,597
Receivables:			
Accounts		129,573	135,996
Allowance for doubtful accounts		(77,554)	(56,385)
Net receivables		52,019	79,611
Total current assets		52,019	102,208
Property, plant, and equipment:			
Land		230,983	230,983
Buildings		2,381,895	2,381,895
Improvements other than buildings		2,100,133	2,100,133
Machinery and equipment		925,976	925,976
Total property, plant, and equipment		5,638,987	5,638,987
Accumulated depreciation		(3,726,900)	(3,613,927)
Net property, plant and equipment		1,912,087	2,025,060
Total assets	$	1,964,106	2,127,268
Liabilities and Net Assets			
Liabilities:			
Current liabilities:			
Accounts payable		6,614	2,409
Accrued payroll and payroll liabilities		13,735	11,761
Accrued leave		20,111	25,056
Due to other funds		66,571	-
Total current liabilities		107,031	39,226
Noncurrent liabilities:			
Landfill closure costs		590,987	564,571
Net pension/OPEB obligation		-	8,821
Total liabilities		698,018	612,618
Net assets:			
Invested in capital assets		1,912,087	2,025,060
Unrestricted (deficit)		(645,999)	(510,410)
Total net assets		1,266,088	1,514,650
Total liabilities and net assets	$	1,964,106	2,127,268

Exhibit H-6

CITY OF KOTZEBUE, ALASKA
Refuse Enterprise Fund
Statement of Revenues, Expenses and Changes in Net Assets
Year Ended June 30, 2009
(With Comparative Amounts for 2008)

	2009	2008
Operating revenues - refuse collection services	$ 675,862	720,197
Operating expenses:		
Personnel	375,331	396,140
Electricity	19,688	18,997
Heating fuel	78,428	44,480
Gas and oil	20,391	20,841
Building maintenance	2,424	11,855
Supplies	58,185	43,481
Telephone	1,609	1,909
Professional fees	2,076	2,076
Insurance	28,469	24,864
Travel	964	-
Training	190	250
Repairs and maintenance	22,646	29,430
Allocated administrative fees	168,504	172,992
Clothing/safety equipment	4,063	3,109
Spring cleanup	5,000	4,696
Small tools	3,226	2,617
Lab testing/monitoring	-	98
Equipment rental	6,544	4,375
Closure costs	37,638	37,638
Depreciation	112,973	252,340
Miscellaneous	621	541
Total operating expenses	948,970	1,072,729
Loss from operations	(273,108)	(352,532)
Nonoperating revenues:		
Equipment sales	-	7,580
State PERS relief	15,250	-
Miscellaneous revenue	475	500
Total nonoperating revenues	15,725	8,080
Loss before special item	(257,383)	(344,452)
Special item - write off of NPO/OPEB	8,821	-
Change in net assets	(248,562)	(344,452)
Net assets, beginning of year	1,514,650	1,859,102
Net assets, end of year	$ 1,266,088	1,514,650

Exhibit H-7

CITY OF KOTZEBUE, ALASKA
Refuse Enterprise Fund
Statement of Cash Flows
Year Ended June 30, 2009
(With Comparative Amounts for 2008)

		2009	2008
Cash flows from operating activities:			
Receipts from customers	$	703,454	720,467
Other miscellaneous receipts		475	8,080
Payments to suppliers		(261,541)	(215,949)
Payments to employees		(363,052)	(397,012)
Payments for interfund services used		(101,933)	(172,992)
Net cash flows from operating activities		(22,597)	(57,406)
Net decrease in cash and investments		(22,597)	(57,406)
Cash and investments, beginning of year		22,597	80,003
Cash and investments, end of year	$	-	22,597
Reconciliation of loss from operations to net cash provided (used) by operating activities:			
Loss from operations		(273,108)	(352,532)
Adjustments to reconcile loss from operations to net cash flows from operating activities:			
Miscellaneous nonoperating revenues		475	8,080
Noncash expense - PERS relief		15,250	-
Increase in allowance for doubtful accounts		21,169	-
Depreciation		112,973	252,340
(Increase) decrease in assets - accounts receivable		6,423	270
Increase (decrease) in liabilities:			
Accounts payable		4,205	(2,330)
Accrued payroll and payroll liabilities		1,974	154
Accrued leave		(4,945)	(1,026)
Due to other funds		66,571	-
Landfill closure costs		26,416	37,638
Net cash flows from operating activities	$	(22,597)	(57,406)

CITY OF KOTZEBUE, ALASKA
Schedule of Expenditures of Federal Awards
Year Ended June 30, 2009

Federal Grant Title	Grant Number	Catalog of Federal Domestic Assistance Number	Total Grant Award	July 1, 2008 Receivable	Federal Share of Expenditures	Federal Receipts	June 30, 2009 Receivable
Department of Health and Human Services							
Passed through Alaska Native Tribal Health Consortium:							
FY 03 PHS Grant	AN03-CA0	93.ANTHC	$ 150,000	-	2,500	2,500	-
FY 05 PHS Grant	AN05-N99	93.ANTHC	752,000	-	161,655	160,898	757
Total Department of Health and Human Services				-	164,155	163,398	757
Department of Agriculture							
Passed through the State of Alaska Department of Environmental Conservation - Water and Waste Disposal Systems for Rural Communities:							
2005 Sanitation Utilities (Federal share)	51522	10.760	6,806,200	164,890	23,257	-	188,147
2007 Sanitation Utilities (Federal share)	07RJ87	10.760	6,375,000	569,848	3,901,861	3,942,451	529,258
2008 Sanitation Utilities (Federal share)	51526	10.760	5,274,461	-	236,688	130,009	106,679
Total Department of Agriculture				734,738	4,161,806	4,072,460	824,084
Environmental Protection Agency							
Passed through the State of Alaska Department of Environmental Conservation - Surveys, Studies, Investigations and Special Purpose Grants - Sewage Lagoon Expansion (Federal share)	51520	66.606	3,380,625	1,356	43,489	-	44,845
Department of Justice							
Passed through the State of Alaska Department of Public Safety - Edward Byrne Memorial Justice Assistance Grant - Multijurisdictional Task Force	09-023F	16.738	57,447	-	33,976	21,949	12,027
Department of Homeland Security							
Direct program - Assistance to Firefighters	EMW-2007-FO-12061	97.044	114,570	-	99,724	113,088	(13,364)
Passed through the State of Alaska Department of Transportation and Public Facilities - Law Enforcement Officer Reimbursement Agreement Program (Federal share)	HSTS0208HSLR358	97.090	146,183	12,898	42,631	51,511	4,018
Total Department of Homeland Security				12,898	142,355	164,599	(9,346)
Total Federal Financial Assistance			$	748,992	4,545,781	4,422,406	872,367

Exhibit J-1

CITY OF KOTZEBUE, ALASKA
Schedule of State Financial Assistance
Year Ended June 30, 2009

State Grant Title	Grant Number	Total Grant Award	July 1, 2008 Receivable	State Share of Expenditures	State Receipts	June 30, 2009 Receivable
Department of Commerce, Community and Economic Development						
* Community Revenue Sharing	-	257,562	-	257,562	257,562	-
Department of Environmental Conservation						
Sewage Lagoon Expansion (State share)	51520	1,126,875	452	14,496	-	14,948
2005 Sanitation Utilities Development (State share)	51522	2,268,800	54,963	7,752	-	62,715
* 2007 Sanitation Utilities (State share)	07RJ87	2,125,000	354,361	1,300,620	1,199,081	455,900
* 2008 Sanitation Utilities Development (State share)	51526	1,810,750	-	78,896	-	78,896
Total Department of Environmental Conservation			409,776	1,401,764	1,199,081	612,459
Department of Transportation and Public Facilities						
Law Enforcement Officer Reimbursement Agreement Program (State share)	HSTS0208HSLR358	28,164	-	8,121	7,355	766
Department of Administration						
* PERS on Behalf	-	508,342	-	508,342	508,342	-
Department of Revenue						
Electric and Telephone Co-op Tax FY08	-	69,016	69,016	-	69,016	-
Electric and Telephone Co-op Tax FY09	-	68,675	-	68,675	-	68,675
Total Department of Revenue			69,016	68,675	69,016	68,675
Total State Financial Assistance		$	478,792	2,244,464	2,041,356	681,900

*Major program

CITY OF KOTZEBUE, ALASKA

Notes to the Schedules of Expenditures of Federal Awards
and State Financial Assistance

Year Ended June 30, 2009

Basis of Presentation

The accompanying Schedules of Expenditures of Federal Awards and State Financial Assistance include the grant activity of City of Kotzebue and are presented on the modified accrual basis of accounting. The information in the schedules is presented in accordance with the requirements of OMB Circular A-133, *Audits of States, Local Governments, and Non-Profit Organizations* and the *State of Alaska Audit Guide and Compliance Supplement for State Single Audits*.

SINGLE AUDIT SECTION

Mikunda,
Cottrell & Co., Inc.
Certified Public Accountants & Consultants

RSM McGladrey Network
An Independently Owned Member

Offices in Anchorage & Kenai

Independent Auditor's Report on Internal Control Over Financial Reporting and on Compliance and Other Matters Based on an Audit of Financial Statements Performed in Accordance with *Government Auditing Standards*

Honorable Mayor and City Council
City of Kotzebue, Alaska

We have audited the financial statements of the governmental activities, the business-type activities, each major fund, and the aggregate remaining fund information of the City of Kotzebue, Alaska, as of and for the year ended June 30, 2009, and have issued our report thereon dated July 16, 2010. We conducted our audit in accordance with auditing standards generally accepted in the United States of America and the standards applicable to financial audits contained in *Government Auditing Standards*, issued by the Comptroller General of the United States.

Internal Control Over Financial Reporting

In planning and performing our audit, we considered the City of Kotzebue's internal control over financial reporting as a basis for designing our auditing procedures for the purpose of expressing our opinion on the financial statements, but not for the purpose of expressing an opinion on the effectiveness of the City of Kotzebue's internal control over financial reporting. Accordingly, we do not express an opinion on the effectiveness of the City of Kotzebue's internal control over financial reporting.

Our consideration of internal control over financial reporting was for the limited purpose described in the preceding paragraph and would not necessarily identify all deficiencies in internal control that might be significant deficiencies or material weaknesses. However, as discussed below, we identified certain deficiencies in internal control over financial reporting that we consider to be significant deficiencies.

A *control deficiency* exists when the design or operation of a control does not allow management or employees, in the normal course of performing their assigned functions, to prevent or detect misstatements on a timely basis. A significant deficiency is a control deficiency, or combination of control deficiencies, that adversely affects the entity's ability to initiate, authorize, record, process, or report financial data reliably in accordance with generally accepted accounting principles such that there is more than a remote likelihood that a misstatement of the entity's financial statements that is more than inconsequential will not be prevented or detected by the entity's internal control. We consider the deficiency described in the accompanying schedule of findings and questioned costs as item 09-01 to be a significant deficiency in internal control over financial reporting.

3601 "C" Street, Suite 600 * Anchorage, Alaska 99503 * (907) 278-8878 * Fax (907) 278-5779 * www.mcc-cpa.com

Honorable Mayor and City Council
City of Kotzebue, Alaska

Compliance and Other Matters

A *material weakness* is a significant deficiency, or combination of significant deficiencies, that results in more than a remote likelihood that a material misstatement of the financial statements will not be prevented or detected by the entity's internal control.

Our consideration of internal control over financial reporting was for the limited purpose described in the first paragraph of this section and would not necessarily identify all deficiencies in the internal control that might be significant deficiencies and, accordingly, would not necessarily disclose all significant deficiencies that are also considered to be material weaknesses. However, we do not believe that the significant deficiency described above is a material weakness.

As part of obtaining reasonable assurance about whether the City of Kotzebue's financial statements are free of material misstatement, we performed tests of its compliance with certain provisions of laws, regulations, contracts and grant agreements, noncompliance with which could have a direct and material effect on the determination of financial statement amounts. However, providing an opinion on compliance with those provisions was not an objective of our audit and, accordingly, we do not express such an opinion. The results of our tests disclosed no instances of noncompliance or other matters that are required to be reported under *Government Auditing Standards*.

We noted certain matters that we reported to management of the City of Kotzebue in a separate letter dated July 16, 2010.

The City of Kotzebue's response to the findings identified in our audit are described in the accompanying schedule of findings and questioned costs. We did not audit the City's response and, accordingly, we express no opinion on it.

This report is intended solely for the information and use of the City of Kotzebue's management, Honorable Mayor and City Council, others within the entity, federal and state awarding agencies, and, if applicable, pass-through entities, and is not intended to be and should not be used by anyone other than these specified parties.

Mikunda, Cottrell & Co.

Anchorage, Alaska
July 16, 2010

Mikunda,
Cottrell & Co., Inc.
Certified Public Accountants & Consultants

RSM McGladrey Network
An Independently Owned Member

Offices in Anchorage & Kenai

Independent Auditor's Report on Compliance with Requirements Applicable to Each Major Program and on Internal Control Over Compliance in Accordance with OMB Circular A-133

Honorable Mayor and City Council
City of Kotzebue, Alaska

Compliance

We have audited the compliance of the City of Kotzebue with the types of compliance requirements described in the *OMB Circular A-133, Compliance Supplement* that are applicable to each of its major federal programs for the year ended June 30, 2009. The City of Kotzebue's major federal programs are identified in the summary of auditor's results section of the accompanying Schedule of Findings and Questioned Costs. Compliance with the requirements of laws, regulations, contracts, and grants applicable to each of its major federal programs is the responsibility of the City of Kotzebue's management. Our responsibility is to express an opinion on the City of Kotzebue's compliance based on our audit.

We conducted our audit of compliance in accordance with auditing standards generally accepted in the United States of America; the standards applicable to financial audits contained in *Government Auditing Standards*, issued by the Comptroller General of the United States; and OMB Circular A-133, *Audits of States, Local Governments, and Non-Profit Organizations*. Those standards and OMB Circular A-133 require that we plan and perform the audit to obtain reasonable assurance about whether noncompliance with the types of compliance requirements referred to above that could have a direct and material effect on a major federal program occurred. An audit includes examining, on a test basis, evidence about the City of Kotzebue's compliance with those requirements and performing such other procedures as we considered necessary in the circumstances. We believe that our audit provides a reasonable basis for our opinion. Our audit does not provide a legal determination of the City of Kotzebue's compliance with those requirements.

In our opinion, the City of Kotzebue complied, in all material respects, with the requirements referred to above that are applicable to each of its major federal programs for the year ended June 30, 2009. However, the results of auditing procedures disclosed an instance of noncompliance with those requirements, which is required to be reported in accordance with OMB Circular A-133 and which is described in the accompanying schedule of findings and questioned costs as item 09-02.

3601 "C" Street, Suite 600 * Anchorage, Alaska 99503 * (907) 278-8878 * Fax (907) 278-5779 * www.mcc-cpa.com

Honorable Mayor and City Council
City of Kotzebue, Alaska

Internal Control Over Compliance

The management of the City of Kotzebue is responsible for establishing and maintaining effective internal control over compliance with the requirements of laws, regulations, contracts, and grants applicable to federal programs. In planning and performing our audit, we considered the City of Kotzebue's internal control over compliance with the requirements that could have a direct and material effect on a major federal program in order to determine our auditing procedures for the purpose of expressing our opinion on compliance but, not for the purpose of expressing an opinion on the effectiveness of internal control over compliance. Accordingly, we do not express an opinion on the effectiveness of the City of Kotzebue's internal control over compliance.

Our consideration of internal control over compliance was for the limited purpose described in the preceding paragraph and would not necessarily identify all deficiencies in the entity's internal control that might be significant deficiencies or material weaknesses as defined below. However, as discussed below, we identified certain deficiencies in internal control over compliance that we consider to be significant deficiencies.

A *control deficiency* in an entity's internal control over compliance exists when the design or operation of a control does not allow management or employees, in the normal course of performing their assigned functions, to prevent or detect noncompliance with a type of compliance requirement of a federal program on a timely basis. A *significant deficiency* is a control deficiency, or combination of control deficiencies, that adversely affects the entity's ability to administer a federal program such that there is more than a remote likelihood that noncompliance with a type of compliance requirement of a federal program that is more than inconsequential will not be prevented or detected by the entity's internal control. We consider the deficiency in internal control over compliance described in the accompanying schedule of findings and questioned costs as item 09-02 to be a significant deficiency.

A *material weakness* is a significant deficiency, or combination of significant deficiencies, that results in more than a remote likelihood that material noncompliance with a type of compliance requirement of a federal program will not be prevented or detected by the entity's internal control. We did not consider the deficiency described in the accompanying schedule of findings and questioned costs to be a material weakness.

The City of Kotzebue's response to the findings identified in our audit are described in the accompanying schedule of findings and questioned costs. We did not audit the City's response and, accordingly, we express no opinion on it.

Honorable Mayor and City Council
City of Kotzebue, Alaska

This report is intended solely for the information and use of the City of Kotzebue's management, Honorable Mayor and City Council, federal awarding agencies and, if applicable, pass-through entities, and is not intended to be and should not be used by anyone other than these specified parties.

Mikunda, Cottrell & Co.

Anchorage, Alaska
July 16, 2010

Mikunda, Cottrell & Co., Inc.
Certified Public Accountants & Consultants

RSM McGladrey Network
An Independently Owned Member

Offices in Anchorage & Kenai

Independent Auditor's Report on Compliance with Requirements Applicable to Each Major Program and on Internal Control Over Compliance in Accordance with the *State of Alaska Audit Guide and Compliance Supplement for State Single Audits*

Honorable Mayor and City Council
City of Kotzebue, Alaska

Compliance

We have audited the compliance of the City of Kotzebue with the types of compliance requirements described in the *State of Alaska Audit Guide and Compliance Supplement for State Single Audits* that are applicable to each of its major state programs for the year ended June 30, 2009. The City of Kotzebue's major state programs are identified in the accompanying Schedule of State Financial Assistance. Compliance with laws, regulations, contracts, and grants applicable to each of its major state programs is the responsibility of the City of Kotzebue's management. Our responsibility is to express an opinion on the City of Kotzebue's compliance based on our audit.

We conducted our audit of compliance in accordance with auditing standards generally accepted in the United States of America; the standards applicable to financial audits contained in *Government Auditing Standards* issued by the Comptroller General of the United States and the *State of Alaska Audit Guide and Compliance Supplement for State Single Audits*. Those standards and *the State of Alaska Audit Guide and Compliance Supplement for State Single Audits* require that we plan and perform the audit to obtain reasonable assurance about whether noncompliance with the types of compliance requirements referred to above that could have a direct and material effect on a major state program occurred. An audit includes examining, on a test basis, evidence about the City of Kotzebue's compliance with those requirements and performing such other procedures as we considered necessary in the circumstances. We believe that our audit provides a reasonable basis for our opinion. Our audit does not provide a legal determination of the City of Kotzebue's compliance with those requirements.

In our opinion, the City of Kotzebue complied, in all material respects, with the requirements referred to above that are applicable to each of its major state programs for the year ended June 30, 2009.

3601 "C" Street, Suite 600 * Anchorage, Alaska 99503 * (907) 278-8878 * Fax (907) 278-5779 * www.mcc-cpa.com

Honorable Mayor and City Council
City of Kotzebue, Alaska

Internal Control Over Compliance

The management of the City of Kotzebue is responsible for establishing and maintaining effective internal control over compliance with the requirements of laws, regulations, contracts, and grants applicable to state programs. In planning and performing our audit, we considered the City of Kotzebue's internal control over compliance with the requirements that could have a direct and material effect on a major state program in order to determine our auditing procedures for the purpose of expressing our opinion on compliance but, not for the purpose of expressing an opinion on the effectiveness of internal control over compliance. Accordingly, we do not express an opinion on the effectiveness of the City of Kotzebue's internal control over compliance.

A *control deficiency* in an entity's internal control over compliance exists when the design or operation of a control does not allow management or employees, in the normal course of performing their assigned functions, to prevent or detect noncompliance with a type of compliance requirement of a state program on a timely basis. A *significant deficiency* is a control deficiency, or combination of control deficiencies, that adversely affects the entity's ability to administer a state program such that there is more than a remote likelihood that noncompliance with a type of compliance requirement of a state program that is more than inconsequential will not be prevented or detected by the entity's internal control.

A *material weakness* is a significant deficiency, or combination of significant deficiencies, that results in more than a remote likelihood that material noncompliance with a type of compliance requirement of a state program will not be prevented or detected by the entity's internal control.

Our consideration of internal control over compliance was for the limited purpose described in the first paragraph of this section and would not necessarily identify all deficiencies in internal control that might be significant deficiencies or material weaknesses. We did not identify any deficiencies in internal control over compliance that we consider to be material weaknesses, as defined above.

This report is intended solely for the information and use of the City of Kotzebue's management, Honorable Mayor and City Council, and the State of Alaska, and is not intended to be and should not be used by anyone other than these specified parties.

Mikunda, Cottrell & Co.

Anchorage, Alaska
July 16, 2010

CITY OF KOTZEBUE, ALASKA

Schedule of Findings and Questioned Costs

Year Ended June 30, 2009

I. Summary of Auditor's Results

Financial Statements

Type of auditor's report issued	Unqualified			
Internal control over financial reporting:				
• Material weakness(es) identified?	____	yes	X	no
• Significant deficiency(ies) identified that are not considered to be material weakness(es)?	X	yes	____	no
• Noncompliance material to financial statements noted?	____	yes	X	no

Federal Financial Assistance

Internal control over major programs:				
• Material weakness(es) identified?	____	yes	X	no
• Significant deficiency(ies) identified that are not considered to be material weakness(es)?	X	yes	____	none reported
Type of auditor's report issued on compliance for major programs?	Unqualified			
Any audit findings disclosed that are required to be reported in accordance with section 510(a) of Circular A-133?	X	yes	____	no

Identification of major programs:

Agency	CFDA Number	Name of Federal Program or Cluster
Department of Agriculture	10.760	Water and Waste Disposal Systems For Rural Communities

Dollar threshold used to distinguish between Type A and Type B programs:	$300,000			
Auditee qualified as low-risk auditee?	X	yes	____	no

State Financial Assistance

Internal control over major programs:				
• Material weakness(es) identified?	____	yes	X	no
• Significant deficiency(ies) identified that are not considered to be material weakness(es)?	____	yes	X	none reported

Summary of Auditor's Results, continued

State Financial Assistance, continued

Type of auditor's report issued on compliance for major programs?	Unqualified
Dollar threshold used to distinguish a state major program?	$75,000

II. Financial Statement Findings

Finding 09-01 **Internal Control Over Utility Billing – Significant Deficiency**

Criteria: Appropriate reviews and approvals of utility billings is an important step in the revenue recording process that helps ensure customers are appropriately billed and revenue recognized in the proper period.

Condition: During our auditing procedures to obtain an understanding of the City's revenue transaction cycle, we observed that there is no process for review and approval of the utility billing report prepared by the Accounts Receivable Technician before bills are sent to customers and revenue and accounts receivable is recorded in the general ledger. In addition, during our auditing procedures over utility customer accounts receivable, we noted billing errors had been made during the year, which went undetected until the following year.

Context: During our utility customer receivable test work, we found that two sewer service billing samples out of the four tested were billed out at substantially less than what they should have been. After further inquiry, we were informed that the City had found and corrected errors during 2010 for billing errors totaling $101,316. The City had to send revised bills to 85 commercial customers. This error went undetected for several months starting in June, 2009.

Effect: An insufficient review process resulted in the City failing to detect these billing errors in a timely manner. Utility revenues were understated by an immaterial amount for the year. The errors were detected and corrected in the subsequent year. If undetected billing errors go undetected in the future, this could limit the amount of resources available to the City to provide sufficient services or cause City service users to pay more than their share of the services provided.

CITY OF KOTZEBUE, ALASKA

Basic Financial Statements, Supplementary
Information and Single Audit Reports

Year Ended June 30, 2010

CITY OF KOTZEBUE, ALASKA

Table of Contents

	Exhibit	Page
FINANCIAL SECTION		
Independent Auditor's Report		1-2
Basic Financial Statements		
Government-wide Financial Statements:		
Statement of Net Assets	A-1	4
Statement of Activities	A-2	5
Fund Financial Statements:		
Governmental Funds:		
Balance Sheet	B-1	6
Reconciliation of Governmental Funds Balance Sheet to Statement of Net Assets	B-2	7
Statement of Revenues, Expenditures and Changes in Fund Balances (Deficit)	B-3	8
Reconciliation of Change in Fund Balances of Governmental Funds to Statement of Activities	B-4	9
Statement of Revenues, Expenditures and Changes in Fund Balance - Budget and Actual:		
General Fund	C-1	10
Gaming Special Revenue Fund	C-2	11
Enterprise Funds:		
Statement of Net Assets	D-1	12
Statement of Revenues, Expenses and Changes in Net Assets	D-2	13
Statement of Cash Flows	D-3	14
Notes to Basic Financial Statements		15-30
Supplementary Information		
Combining and Individual Fund Financial Statements and Schedules:		
Nonmajor Governmental Funds:		
Combining Balance Sheet	E-1	32
Combining Statement of Revenues, Expenditures and Changes in Fund Balances (Deficit)	E-2	33
General Fund:		
Balance Sheet	F-1	35
Schedule of Revenues, Expenditures and Changes in Fund Balance - Budget and Actual	F-2	36-41

	Exhibit	Page
FINANCIAL SECTION		
Supplementary Information, continued		
Combining and Individual Fund Financial Statements and Schedules, continued:		
Special Revenue Funds:		
Schedule of Revenues, Expenditures and Changes in Fund Balance – Budget and Actual:		
Gaming	G-1	43
Adult Center	G-2	44
Enterprise Funds:		
Water and Sewer Utility:		
Statement of Net Assets	H-1	46
Statement of Revenues, Expenses and Changes in Net Assets	H-2	47-48
Statement of Cash Flows	H-3	49
Combining Schedule of Water and Sewer Capital Projects	H-4	50
Refuse:		
Statement of Net Assets	H-5	51
Statement of Revenues, Expenses and Changes in Net Assets	H-6	52
Statement of Cash Flows	H-7	53
Package Store Enterprise Fund:		
Statement of Net Assets	H-8	54
Statement of Revenues, Expenses and Changes in Net Assets	H-9	55
Statement of Cash Flows	H-10	56
Schedule of Expenditures of Federal Awards	I-1	57
Schedule of State Financial Assistance	J-1	58
Notes to the Schedules of Expenditures of Federal Awards and State Financial Assistance		59

CITY OF KOTZEBUE, ALASKA

Table of Contents, continued

	Page
SINGLE AUDIT SECTION	
Independent Auditor's Report on Internal Control Over Financial Reporting and on Compliance and Other Matters Based on an Audit of Financial Statements Performed in Accordance with *Government Auditing Standards*	62-63
Independent Auditor's Report on Compliance with Requirements That Could Have a Direct and Material Effect on Each Major Program and on Internal Control Over Compliance in Accordance with OMB Circular A-133	64-65
Independent Auditor's Report on Compliance with Requirements That Could Have a Direct and Material Effect on Each Major Program and on Internal Control Over Compliance in Accordance with the *State of Alaska Audit Guide and Compliance Supplement for State Single Audits*	66-67
Schedule of Findings and Questioned Costs	68-71
Summary Schedule of Prior Audit Findings	72
Corrective Action Plan	73

(This page left blank intentionally)

Mikunda, Cottrell & Co., Inc.
Certified Public Accountants & Consultants

An Independently Owned Member
McGLADREY ALLIANCE | McGladrey

Offices in Anchorage & Kenai

Independent Auditor's Report

Honorable Mayor and City Council
City of Kotzebue, Alaska

We have audited the accompanying financial statements of the governmental activities, the business-type activities, each major fund, and the aggregate remaining fund information of the City of Kotzebue, Alaska, as of and for the year ended June 30, 2010, which collectively comprise the City's basic financial statements as listed in the table of contents. These financial statements are the responsibility of the City's management. Our responsibility is to express opinions on these financial statements based on our audit.

We conducted our audit in accordance with auditing standards generally accepted in the United States of America and the standards applicable to financial audits contained in *Government Auditing Standards* issued by the Comptroller General of the United States. Those standards require that we plan and perform the audit to obtain reasonable assurance about whether the financial statements are free of material misstatement. An audit includes examining, on a test basis, evidence supporting the amounts and disclosures in the financial statements. An audit also includes assessing the accounting principles used and significant estimates made by management, as well as evaluating the overall financial statement presentation. We believe that our audit provides a reasonable basis for our opinions.

In our opinion, the financial statements referred to above present fairly, in all material respects, the respective financial position of the governmental activities, the business-type activities, each major fund, and the aggregate remaining fund information of the City of Kotzebue, Alaska, as of June 30, 2010, and the respective changes in financial position and cash flows, where applicable, thereof and the respective budgetary comparison for the General Fund and Gaming Special Revenue Fund for the year then ended in conformity with accounting principles generally accepted in the United States of America.

In accordance with *Government Auditing Standards*, we have also issued our report dated November 19, 2010, on our consideration of City of Kotzebue's internal control over financial reporting and on our tests of its compliance with certain provisions of laws, regulations, contracts, and grant agreements and other matters. The purpose of that report is to describe the scope of our testing of internal control over financial reporting and compliance and the results of that testing, and not to provide an opinion on the internal control over financial reporting or on compliance. That report is an integral part of an audit performed in accordance with *Government Auditing Standards* and should be considered in assessing the results of our audit.

3601 "C" Street, Suite 600 * Anchorage, Alaska 99503 * (907) 278-8878 * Fax (907) 278-5779 * www.mcc-cpa.com

Honorable Mayor and City Council
City of Kotzebue, Alaska

City of Kotzebue has not presented the Management's Discussion and Analysis that accounting principles generally accepted in the United States of America require to supplement, although not to be part of, the basic financial statements.

Our audit was conducted for the purpose of forming opinions on the financial statements that collectively comprise the City of Kotzebue's basic financial statements. The accompanying Schedule of Expenditures of Federal Awards, Schedule of State Financial Assistance, and the combining and individual fund financial statements and schedules listed in the table of contents are presented for purposes of additional analysis and are not a required part of the basic financial statements. The Schedule of Expenditures of Federal Awards is required by U.S. Office of Management and Budget Circular A-133, *Audits of States, Local Governments, and Nonprofit Organizations* and the Schedule of State Financial Assistance is required by the *State of Alaska Audit Guide and Compliance Supplement for State Single Audits*. Such information has been subjected to the auditing procedures applied in the audit of the basic financial statements and, in our opinion, is fairly stated in all material respects in relation to the basic financial statements taken as a whole.

Mikunda, Cottrell & Co.

Anchorage, Alaska
November 19, 2010

BASIC FINANCIAL STATEMENTS

Exhibit A-1

CITY OF KOTZEBUE, ALASKA
Statement of Net Assets
June 30, 2010

	Governmental Activities	Business-type Activities	Total
Assets			
Cash and investments	$ 492,989	1,591,569	2,084,558
Receivables, net of allowance for uncollectible amounts:			
Accounts	-	262,458	262,458
Grants and shared revenues	161,639	687,699	849,338
Sales tax	218,775	-	218,775
Other	141,850	-	141,850
Internal balances	160,260	(160,260)	-
Prepaid items	23,280	-	23,280
Capital assets:			
Land and construction in progress	497,270	230,983	728,253
Other capital assets, net of depreciation	3,269,822	35,542,311	38,812,133
Total assets	$ 4,965,885	38,154,760	43,120,645
Liabilities			
Accounts payable	120,385	34,790	155,175
Accrued payroll and payroll liabilities	148,138	28,551	176,689
Unearned revenue	121,290	-	121,290
Deposits	-	195	195
Noncurrent liabilities:			
Due within one year - accrued leave	225,869	59,769	285,638
Due in more than one year - landfill closure costs	-	382,413	382,413
Total liabilities	615,682	505,718	1,121,400
Net Assets			
Invested in capital assets	3,767,092	35,773,294	39,540,386
Unrestricted	583,111	1,875,748	2,458,859
Total net assets	4,350,203	37,649,042	41,999,245
Total liabilities and net assets	$ 4,965,885	38,154,760	43,120,645

See accompanying notes to basic financial statements.

Exhibit A-2

CITY OF KOTZEBUE, ALASKA
Statement of Activities
Year Ended June 30, 2010

Activities	Expenses	Program Revenues: Fees, Fines & Charges for Services	Program Revenues: Operating Grants & Contri-butions	Program Revenues: Capital Grants & Contri-butions	Net (Expense) Revenue and Changes in Net Assets: Govern-mental Activities	Net (Expense) Revenue and Changes in Net Assets: Business-type Activities	Net (Expense) Revenue and Changes in Net Assets: Totals
Governmental:							
General government	$ 1,362,510	601,630	-	-	(760,880)	-	(760,880)
Public safety	2,903,654	665,129	1,026,325	-	(1,212,200)	-	(1,212,200)
Public works	1,615,782	-	-	3,186	(1,612,596)	-	(1,612,596)
Community services	99,734	-	-	-	(99,734)	-	(99,734)
Adult Center operations	222,728	50,584	-	-	(172,144)	-	(172,144)
Gaming operations	1,079,421	1,111,675	-	-	32,254	-	32,254
Total governmental activities	7,283,829	2,429,018	1,026,325	3,186	(3,825,300)	-	(3,825,300)
Business-type:							
Water and sewer utility	3,578,954	1,840,244	21,466	5,149,897	-	3,432,653	3,432,653
Refuse	862,599	907,337	11,831	-	-	56,569	56,569
Package store	29,536	-	-	-	-	(29,536)	(29,536)
Total business-type activities	4,471,089	2,747,581	33,297	5,149,897	-	3,459,686	3,459,686
Totals	$ 11,754,918	5,176,599	1,059,622	5,153,083	(3,825,300)	3,459,686	(365,614)
General revenues:							
Taxes:							
Sales taxes					$ 2,914,941	-	2,914,941
Penalties and interest on delinquent taxes					5,051	-	5,051
Other taxes					70,914	-	70,914
Grants and entitlements not restricted to a specific purpose					488,627	-	488,627
Investment income					8,574	-	8,574
Other					101,846	-	101,846
Total general revenues					3,589,953	-	3,589,953
Change in net assets					(235,347)	3,459,686	3,224,339
Net assets, beginning of year					4,585,550	34,189,356	38,774,906
Net assets, end of year					$ 4,350,203	37,649,042	41,999,245

See accompanying notes to basic financial statements.

Exhibit B-1

CITY OF KOTZEBUE, ALASKA
Governmental Funds
Balance Sheet
June 30, 2010

Assets		Major Funds General	Major Funds Gaming Special Revenue	Nonmajor Funds	Total Governmental Funds
Cash and investments	$	421,150	65,860	5,979	492,989
Receivables:					
Grants and shared revenues		160,882	-	757	161,639
Sales tax		218,775	-	-	218,775
Other		141,850	-	-	141,850
Prepaid items		23,280	-	-	23,280
Due from other funds		181,090	-	-	181,090
Total assets	$	1,147,027	65,860	6,736	1,219,623
Liabilities and Fund Balances					
Liabilities:					
Accounts payable		112,556	4,311	3,518	120,385
Accrued payroll and payroll liabilities		142,065	3,612	2,461	148,138
Deferred revenue		121,290	-	-	121,290
Due to other funds		-	-	20,830	20,830
Total liabilities		375,911	7,923	26,809	410,643
Fund balances:					
Reserved:					
Encumbrances		15,727	-	-	15,727
Prepaid items		23,280	-	-	23,280
Unreserved - undesignated (deficit)		732,109	57,937	(20,073)	769,973
Total fund balances		771,116	57,937	(20,073)	808,980
Total liabilities and fund balances	$	1,147,027	65,860	6,736	1,219,623

See accompanying notes to basic financial statements.

Exhibit B-2

CITY OF KOTZEBUE, ALASKA
Reconciliation of Governmental Funds Balance Sheet
to Statement of Net Assets
June 30, 2010

Total fund balances for governmental funds		$ 808,980
Total net assets reported for governmental activities in the Statement of Net Assets is different because:		
Capital assets used in governmental activities are not financial resources and therefore are not reported in the funds. These assets, net of accumulated depreciation consist of:		
Land and land improvements	$ 497,270	
Buildings	5,462,829	
Machinery and equipment	2,016,816	
Total capital assets	7,976,915	
Less accumulated depreciation	(4,209,823)	
Total capital assets, net of accumulated depreciation		3,767,092
Long-term liabilities are not due and payable in the current period and therefore are not reported as fund liabilities. These liabilities consist of accrued leave		(225,869)
Total net assets of governmental activities		$ 4,350,203

See accompanying notes to basic financial statements.

Exhibit B-3

CITY OF KOTZEBUE, ALASKA
Governmental Funds
Statement of Revenues, Expenditures and Changes in Fund Balances (Deficit)
Year Ended June 30, 2010

	Major Funds			
	General	Gaming Special Revenue	Nonmajor Funds	Total Governmental Funds
Revenues:				
Taxes	$ 2,990,906	-	-	2,990,906
Intergovernmental	1,509,638	5,314	3,186	1,518,138
Charges for services	1,172,881	-	-	1,172,881
Investment income	8,574	-	-	8,574
Gaming	-	1,111,675	-	1,111,675
Adult Center	-	-	50,584	50,584
Other	195,724	-	-	195,724
Total revenues	5,877,723	1,116,989	53,770	7,048,482
Expenditures:				
Current:				
General government	1,360,391	-	-	1,360,391
Public safety	2,804,125	-	-	2,804,125
Public works	1,567,038	-	-	1,567,038
Community services	99,734	-	-	99,734
Gaming operations	-	1,079,421	-	1,079,421
Adult Center operations	-	-	185,228	185,228
Total expenditures	5,831,288	1,079,421	185,228	7,095,937
Excess of revenues over (under) expenditures	46,435	37,568	(131,458)	(47,455)
Other financing sources (uses):				
Transfers in	23,988	-	131,458	155,446
Transfers out	(53,458)	(78,000)	(23,988)	(155,446)
Net other financing sources (uses)	(29,470)	(78,000)	107,470	-
Net change in fund balances	16,965	(40,432)	(23,988)	(47,455)
Fund balances, beginning of year	754,151	98,369	3,915	856,435
Fund balances (deficit), end of year	$ 771,116	57,937	(20,073)	808,980

See accompanying notes to basic financial statements.

Exhibit B-4

CITY OF KOTZEBUE, ALASKA
Reconciliation of Change in Fund Balances of Governmental Funds
to Statement of Activities
Year Ended June 30, 2010

Net change in fund balances - total governmental funds	$ (47,455)
The change in net assets reported for governmental activities in the Statement of Activities is different because:	
Governmental funds report capital outlays as expenditures. However on the Statement of Activities, depreciation expense is recognized to allocate the cost of these items over their estimated useful lives.	
Depreciation	(234,782)
Some expenses reported in the Statement of Activities do not require the use of current financial resources and, therefore, are not reported as expenditures in governmental funds. This is the amount of decrease in accrued leave.	46,890
Change in net assets of governmental activities	$ (235,347)

See accompanying notes to basic financial statements.

Exhibit C-1

CITY OF KOTZEBUE, ALASKA
General Fund
Statement of Revenues, Expenditures, and
Changes in Fund Balance - Budget and Actual
Year Ended June 30, 2010

	Original Budget	Final Budget	Actual	Variance with Final Budget Positive (Negative)
Revenues:				
Taxes	$ 3,262,500	3,262,500	2,990,906	(271,594)
Intergovernmental	1,599,929	1,599,929	1,509,638	(90,291)
Charges for services	920,000	920,000	1,172,881	252,881
Investment income	20,000	20,000	8,574	(11,426)
Other	140,282	140,282	195,724	55,442
Total revenues	5,942,711	5,942,711	5,877,723	(64,988)
Expenditures:				
General government	1,165,903	1,165,903	1,360,391	(194,488)
Public safety	2,986,905	2,986,905	2,804,125	182,780
Public works	1,764,492	1,764,492	1,567,038	197,454
Community services	82,500	82,500	99,734	(17,234)
Nondepartmental	127,980	127,980	-	127,980
Total expenditures	6,127,780	6,127,780	5,831,288	296,492
Excess of revenues over (under) expenditures	(185,069)	(185,069)	46,435	231,504
Other financing sources (uses):				
Transfers in	-	-	23,988	23,988
Transfers out	(48,083)	(48,083)	(53,458)	(5,375)
Net other financing sources (uses)	(48,083)	(48,083)	(29,470)	18,613
Net change in fund balance	$ (233,152)	(233,152)	16,965	250,117
Fund balance, beginning of year			754,151	
Fund balance, end of year		$	771,116	

See accompanying notes to basic financial statements.

Exhibit C-2

CITY OF KOTZEBUE, ALASKA
Gaming Special Revenue Fund
Statement of Revenues, Expenditures and
Changes in Fund Balance - Budget and Actual
Year Ended June 30, 2010

	Original Budget	Final Budget	Actual	Variance with Final budget Positive (Negative)
Revenues:				
Bingo and pull tabs	$ 1,245,000	1,245,000	1,111,675	(133,325)
State PERS relief	-	-	5,314	5,314
Total revenues	1,245,000	1,245,000	1,116,989	(128,011)
Expenditures:				
Personnel	147,061	147,061	140,627	6,434
Rent	30,800	30,800	29,700	1,100
Supplies	33,565	33,565	25,617	7,948
Payouts to winners	871,076	871,076	799,310	71,766
Donations	50,000	50,000	52,000	(2,000)
Insurance	6,398	6,398	5,131	1,267
Allocated administration	18,200	18,200	18,204	(4)
Other	9,900	9,900	8,832	1,068
Total expenditures	1,167,000	1,167,000	1,079,421	87,579
Excess of revenues over expenditures	78,000	78,000	37,568	(40,432)
Other financing uses - transfers out	(78,000)	(78,000)	(78,000)	-
Net change in fund balance	$ -	-	(40,432)	(40,432)
Fund balance, beginning of year			98,369	
Fund balance, end of year		$	57,937	

See accompanying notes to basic financial statements.

Exhibit D-1

CITY OF KOTZEBUE, ALASKA
Enterprise Funds
Statement of Net Assets
June 30, 2010

	Major Funds		Nonmajor Fund	
Assets	Water and Sewer Utility	Refuse	Package Store	Total Enterprise Funds
Current assets:				
Cash and investments	$ 1,591,569	-	-	1,591,569
Receivables:				
Accounts	410,667	171,715	-	582,382
Allowance for doubtful receivables	(223,947)	(95,977)	-	(319,924)
Grants	687,699	-	-	687,699
Net receivables	874,419	75,738	-	950,157
Total current assets	2,465,988	75,738	-	2,541,726
Property, plant, and equipment	81,556,338	5,638,987	-	87,195,325
Accumulated depreciation	(47,582,269)	(3,839,762)	-	(51,422,031)
Net property, plant, and equipment	33,974,069	1,799,225	-	35,773,294
Total assets	$ 36,440,057	1,874,963	-	38,315,020
Liabilities and Net Assets				
Liabilities:				
Current liabilities:				
Accounts payable	20,822	5,533	8,435	34,790
Accrued payroll and payroll liabilities	17,334	11,217	-	28,551
Accrued leave	45,785	13,984	-	59,769
Deposits	195	-	-	195
Due to other funds	-	139,159	21,101	160,260
Total current liabilities	84,136	169,893	29,536	283,565
Noncurrent liabilities - landfill closure costs	-	382,413	-	382,413
Total liabilities	84,136	552,306	29,536	665,978
Net assets:				
Invested in capital assets	33,974,069	1,799,225	-	35,773,294
Unrestricted (deficit)	2,381,852	(476,568)	(29,536)	1,875,748
Total net assets (deficit)	36,355,921	1,322,657	(29,536)	37,649,042
Total liabilities and net assets	$ 36,440,057	1,874,963	-	38,315,020

See accompanying notes to basic financial statements.

Exhibit D-2

CITY OF KOTZEBUE, ALASKA
Enterprise Funds
Statement of Revenues, Expenses and Changes in Net Assets
Year Ended June 30, 2010

	Major Funds		Nonmajor Fund	
	Water and Sewer Utility	Refuse	Package Store	Total Enterprise Funds
Operating revenues:				
Water use charges and connect fees	$ 1,239,480	-	-	1,239,480
Sewer use charges and connect fees	573,837	-	-	573,837
Refuse and landfill	-	700,601	-	700,601
Penalties and interest	19,112	-	-	19,112
Total operating revenues	1,832,429	700,601	-	2,533,030
Operating expenses:				
Administration	346,974	168,504	-	515,478
Water	1,004,635	-	-	1,004,635
Sewer	436,456	-	-	436,456
Refuse and landfill	-	581,233	-	581,233
Package store and distribution site	-	-	29,536	29,536
Depreciation	1,790,389	112,862	-	1,903,251
Total operating expenses	3,578,454	862,599	29,536	4,470,589
Loss from operations	(1,746,025)	(161,998)	(29,536)	(1,937,559)
Nonoperating revenues (expenses):				
Equipment rental	6,109	-	-	6,109
Equipment sales	1,706	-	-	1,706
State PERS relief	21,466	11,831	-	33,297
Landfill closure liability reduction	-	205,273	-	205,273
Miscellaneous revenues (expenses)	(500)	1,463	-	963
Net nonoperating revenues (expenses)	28,781	218,567	-	247,348
Loss before contributions	(1,717,244)	56,569	(29,536)	(1,690,211)
Capital contributions	5,149,897	-	-	5,149,897
Change in net assets	3,432,653	56,569	(29,536)	3,459,686
Net assets, beginning of year	32,923,268	1,266,088	-	34,189,356
Net assets, end of year	$ 36,355,921	1,322,657	(29,536)	37,649,042

See accompanying notes to basic financial statements.

CITY OF KOTZEBUE, ALASKA
Enterprise Funds
Statement of Cash Flows
Year Ended June 30, 2010

	Major Funds		Nonmajor Fund	
	Water and Sewer Utility	Refuse	Package Store	Total Enterprise Funds
Cash flows from operating activities:				
Receipts from customers and users	$ 1,793,743	678,345	-	2,472,088
Payments to suppliers	(1,581,383)	(238,351)	(15,492)	(1,835,226)
Payments to employees	(591,878)	(344,078)	(5,609)	(941,565)
Payments for interfund services used	(338,584)	(168,504)	-	(507,088)
Net cash flows from operating activities	(718,102)	(72,588)	(21,101)	(811,791)
Cash flows from noncapital financing activities -				
Increase in due to other funds	-	72,588	21,101	93,689
Cash flows from capital and related financing activities:				
Acquisition and construction of capital assets	(5,159,497)	-	-	(5,159,497)
Capital contributions received	5,954,330	-	-	5,954,330
Net cash flows from capital and related financing activities	794,833	-	-	794,833
Net increase in cash and investments	76,731	-	-	76,731
Cash and investments, beginning of year	1,514,838	-	-	1,514,838
Cash and investments, end of year	$ 1,591,569	-	-	1,591,569
Reconciliation of loss from operations to net cash provided (used) by operating activities:				
Loss from operations	(1,746,025)	(161,998)	(29,536)	(1,937,559)
Adjustments to reconcile loss from operations to net cash flows from operating activities:				
Miscellaneous nonoperating revenues	7,315	1,463	-	8,778
Noncash expense - PERS relief	21,466	11,831	-	33,297
Increase in allowance for doubtful accounts	24,807	18,423	-	43,230
Depreciation	1,790,389	112,862	-	1,903,251
Increase in assets - accounts receivable	(60,341)	(42,142)	-	(102,483)
Increase (decrease) in liabilities:				-
Accounts payable	(752,438)	(1,081)	8,435	(745,084)
Accrued payroll and payroll liabilities	(6,208)	(2,518)	-	(8,726)
Accrued leave	13,400	(6,127)	-	7,273
Deferred revenue	(10,467)	-	-	(10,467)
Landfill closure costs	-	(3,301)	-	(3,301)
Net cash flows from operating activities	$ (718,102)	(72,588)	(21,101)	(811,791)

See accompanying notes to basic financial statements.

(1) **Summary of Significant Accounting Policies**

Reporting Entity

The City of Kotzebue was incorporated on October 14, 1958. The City operates under a Council-Manager form of government and provides a full range of services including public safety, streets, sanitation, water and sewer, health and social services, culture and recreation, public improvements, planning and zoning, and general administrative services.

The financial statements included in this report are for City of Kotzebue only. There are no other component units for which City of Kotzebue is financially accountable, nor do any special financial relationships exist between the City and any other entity.

The accounting policies of the City conform to generally accepted accounting principles as applicable to governments. The following is a summary of the more significant policies:

Government-Wide and Fund Financial Statements

The government-wide financial statements (i.e., the statement of net assets and the statement of activities) report information on all of the activities of the City. In general, the effect of interfund activity has been removed from these statements to minimize the double-counting of internal activities. *Governmental activities*, which normally are supported by taxes and intergovernmental revenues, are reported separately from *business-type activities,* which rely primarily on fees and charges to external parties.

The statement of activities demonstrates the degree to which the direct expenses of a given function or segment are offset by program revenues. *Direct expenses* are those that are clearly identifiable with a specific function or segment. *Program revenues* include 1) fees, fines and charges to customers or applicants who purchase, use, or directly benefit from goods, services, or privileges provided by a given function or segment and 2) grants and contributions that are restricted to meeting the operational or capital requirements of a particular function or segment. Taxes and other items not properly included among program revenues are reported instead as *general revenues*.

Separate financial statements are provided for governmental funds and proprietary funds. Major individual governmental funds and major individual enterprise funds are reported as separate columns in the fund financial statements.

Measurement Focus, Basis of Accounting, and Financial Statement Presentation

The government-wide and proprietary fund financial statements are reported using the economic resources measurement focus and the *accrual basis of accounting.* Revenues are recorded when earned and expenses are recorded when a liability is incurred, regardless of the timing of the related cash flows. Grants and similar items are recognized as revenue as soon as all eligibility requirements imposed by the provider have been met.

Summary of Significant Accounting Policies, continued

Measurement Focus, Basis of Accounting, and Financial Statement Presentation, continued

Governmental fund financial statements are reported using the current financial resources measurement focus and the *modified accrual basis of accounting*. Revenues are recognized as soon as they are both measurable and available. Revenues are considered to be *available* when they are collectible within the current period or soon enough thereafter to pay liabilities of the current period. For this purpose, the City considers all revenues except reimbursement grants to be available if they are collected within 60 days after year end. Reimbursement grants are considered available if they are collected within one year of the end of the current fiscal period. Expenditures generally are recorded when a liability is incurred, as under accrual accounting. However, debt service expenditures, as well as expenditures related to accrued leave are recorded only to the extent they have matured.

Sales taxes, charges for services, and interest associated with the current fiscal period are all considered to be susceptible to accrual and so have been recognized as revenues of the current fiscal period. Most other revenue items are considered to be measurable and available only when received by the government.

The City reports the following major funds:

Major governmental funds:

The *General Fund* is the City's primary operating fund. It accounts for all financial resources of the general government, except those required to be reported in another fund.

The *Gaming Special Revenue Fund* accounts for the operations of the gaming activities for the City of Kotzebue.

Major proprietary funds:

The *Water and Sewer Utility Enterprise Fund* is used to account for the operations of the City's water system and the waster water utility.

The *Refuse Enterprise Fund* is used to account for the operations of the City's solid waste and landfill activities.

Private-sector standards of accounting and financial reporting issued prior to December 1, 1989, generally are followed in both the government-wide and enterprise fund financial statements to the extent that those standards do not conflict with or contradict guidance of the Governmental Accounting Standards Board (GASB). Governments also have the option of following subsequent private-sector guidance for their business-type activities and enterprise funds, subject to the same limitation. The City has elected not to follow subsequent private-sector guidance.

Summary of Significant Accounting Policies, continued

Measurement Focus, Basis of Accounting, and Financial Statement Presentation, continued

As a general rule the effect of interfund activity has been eliminated from the government-wide financial statements. Exceptions to this general rule are allocated administration fees and charges between the enterprise funds and the various other funds and departments. Elimination of these charges would distort the direct costs and program revenues reported for the various functions concerned.

Amounts reported as *program revenues* include 1) charges to customers or applicants for goods, services, or privileges provided, 2) operating grants and contributions, and 3) capital grants and contributions. Internally dedicated resources are reported as *general revenues* rather than as program revenues. In addition, general revenues include all taxes, investment income, and State of Alaska entitlement revenues.

Proprietary funds distinguish *operating* revenues and expenses from *nonoperating* items. Operating revenues and expenses generally result from providing services and producing and delivering goods in connection with a proprietary fund's principal ongoing operations. The principal operating revenues of the Enterprise Funds are charges to customers for sales and services. Operating expenses for the Enterprise Funds include the costs of sales and services, administrative expenses and depreciation on capital assets. All revenues and expenses not meeting this definition are reported as nonoperating revenues and expenses.

When both restricted and unrestricted resources are available for use, it is the City's policy to use restricted resources first, then unrestricted resources as they are needed.

Cash and Cash Equivalents

For purposes of the statements of cash flows, the proprietary funds consider all cash accounts to be cash and cash equivalents. The central treasury, which holds cash and investments, is used essentially as a cash management pool by each fund.

Inventory

Inventories are valued at the lower of cost or market in the proprietary funds. Cost is determined by the first-in, first-out method. The cost is recorded as an expense at the time individual inventory items are consumed.

Receivables and Payables

Activity between funds that are representative of lending/borrowing arrangements outstanding at the end of the year are referred to as either "due to / from other funds" (i.e., the current portion of interfund loans) or "advances to / from other funds" (i.e., the noncurrent portion of interfund loans). All other outstanding balances between funds are reported as "due to / from other funds." Any residual balances outstanding between the governmental activities and business-type activities are reported in the government-wide financial statements as "internal balances."

Summary of Significant Accounting Policies, continued

Grants and Other Intergovernmental Revenues

In applying the measurable and available concepts to grants and intergovernmental revenues, the legal and contractual requirements of the numerous individual programs are used as guidance. There are, however, essentially two types of these revenues. In one, monies must be expended on the specific purpose or project before any amounts are considered "earned"; therefore, revenues are recognized based on expenditures recorded. In the other, monies are virtually unrestricted as to purpose of expenditure and are usually revocable only for failure to comply with prescribed compliance requirements. These resources are reflected as revenues at the time of receipt or earlier if the measurable and available criteria are met.

Interfund Transactions

During the course of normal operations, the City has numerous transactions between funds, including expenditures and transfers of resources to provide services, construct assets, and service debt. The accompanying financial statements generally reflect such transactions as transfers. Operating subsidies are also recorded as transfers.

Accrued Leave

All full-time employees are eligible for paid personal leave. Accrued leave is recorded as an expense in the government-wide and proprietary fund financial statements. A liability for these amounts is reported in the governmental fund financial statements only if they have matured (e.g. the employee has terminated employment).

Capital Assets

Capital assets, which include property, plant, and equipment, are reported in the applicable governmental or business-type activities columns in the government-wide financial statements. As a phase 3 government for GASB Statement 34 purposes, the City records additions to infrastructure capital assets (e.g. roads, sidewalks, etc.) prospectively from the GASB Statement 34 implementation date, which was June 30, 2003. Capital assets are defined by the City as assets with an initial, individual cost of more than $5,000 and an estimated useful life in excess of one year. Such assets are recorded at historical cost or estimated historical cost if purchased or constructed. Donated capital assets are recorded at estimated fair market value at the date of donation.

Major outlays for capital assets and improvements are capitalized as projects are constructed. Interest incurred during the construction phase of capital assets of business-type activities is included as part of the capitalized value of the assets constructed.

The costs of normal maintenance and repairs that do not add to the value of the asset or materially extend the useful life of the asset are not capitalized.

Summary of Significant Accounting Policies, continued

Capital Assets, continued

Property, plant, and equipment of the City is depreciated using the straight line method over the following estimated useful lives:

Buildings and improvements	25-40 years
Improvements other than buildings	10-25 years
Machinery and equipment	5-25 years

Long-Term Debt

In the government-wide and the proprietary fund financial statements, long-term debt and other long-term obligations are reported as liabilities in the applicable governmental activities, business-type activities, or proprietary fund type statement of net assets. Bond premiums and discounts, as well as issuance costs, are deferred and amortized over the life of the bonds using the straight-line method.

Fund Balances

In the fund financial statements, governmental funds report reservations of fund balance for amounts that are not available for appropriation or are legally restricted by outside parties for use for a specific purpose. Designations of fund balance represent tentative management plans that are subject to change.

Encumbrances

Encumbrance accounting, under which purchase orders, contracts and other commitments for expenditures are recorded in order to reserve that portion of the applicable appropriation, is employed as an extension of formal budgetary integration in the General Fund and Special Revenue Funds. Encumbrances outstanding at year end are reported as reservations of fund balances since they do not constitute expenditures or liabilities.

Deferred Grant Revenue

Amounts received from grantor agencies, which are restricted as to use and have not been expended for the intended use are shown as deferred revenue.

Pension Plan

All full-time permanent employees of the City participate in the Public Employees' Retirement System (PERS) administered by the State of Alaska.

Comparative Data

Comparative data for the prior year have been presented in some of the accompanying individual financial statements in order to provide an understanding of changes in the City's financial position and operations.

(2) **Cash and Investments**

The City of Kotzebue utilizes a central treasury that is available for use by all funds. Each fund's portion of the central treasury is displayed on the balance sheet as "Cash and investments", or is included in "Due to other funds."

Reconciliation of Deposit and Investment Balances

The following is a reconciliation of the City's deposit and investment balances to the financial statements at June 30, 2010.

Bank deposits	$ 1,327,526
Investments	757,032
	$ 2,084,558

Investments

Investment Policy

The City is authorized to invest in the following instruments. All securities purchased by the City and all other City investments must mature not later than the time indicated below, measured from the date of the City's investment transaction.

1. Obligations of, or obligations insured or guaranteed by the United States or an agency or instrumentality of the United States - three (3) years.
2. Certificates of deposit and other deposits at banks and savings and loans associations - three (3) years.
3. Federally insured deposits at banks and savings and loan associations - three (3) years.
4. Bonds and notes which are issued by a State or political subdivision thereof, or pursuant to the Tribal Tax Statutes Act 26 U.S.C. Sec. 7871 and which are rated AA or higher by a nationally recognized rating service - three (3) years.
5. Commercial paper issued by corporations and having the highest rating given by a nationally recognized rating service - two hundred seventy (270) days.
6. Bankers acceptances drawn on and accepted (a) at banks, all of whose debt issues are rated at least AA or its equivalent by a nationally recognized rating service or (b) if the bank is a subsidiary of one bank holding company, all of whose commercially held paper has the highest rating given by a nationally recognized rating service or whose debt issues meet the requirements in (a) above - one hundred eighty (180) days.
7. Money market mutual funds whose portfolio consists entirely of instruments - maturity date not applicable, which are U.S. government, or U.S. government guaranteed obligations, which have a constant net asset value.
8. Repurchase agreements, the securities underlying the agreement being any of the items listed in subsection 1 and 6 of this section which meet a margin requirement of 102%.

Cash and Investments, continued
Investments, continued
Investment Policy, continued

9. The Alaska Municipal League Investment Pool, made in accordance with terms of that Pool's "Common Investment Agreement."

Interest Rate Risk
Interest rate risk is the risk that changes in market interest rates will adversely affect the fair value of an investment. Generally, the longer the maturity of an investment, the greater the sensitivity of its fair value to changes in market interest rates.

Investment maturities in investments at June 30, 2010 are as follows:

		Investment Maturities (in Years)	
Investment Type	Fair Value	Less Than 1	1-5
Certificates of deposit	$ 102,208	102,208	-
Money market	654,824		
Total investments	$ 757,032		

Credit Risk
Generally, credit risk is the risk that an issuer of an investment will not fulfill its obligation to the holder of the investment. This is measured by the assignment of a rating by a nationally recognized statistical rating organization. The City does not have any investments subject to credit risk.

(3) **Accounts Receivable and Valuation Allowance**
The City maintains accounts receivable balances of which a portion is reserved as an allowance for doubtful receivables. At June 30, 2010, receivables for the City's individual major funds and nonmajor funds in the aggregate, including applicable allowances for uncollectible accounts, are as follows:

	Major Governmental General Fund	Nonmajor Governmental Funds	Total Governmental Funds
Grants and shared revenues	$ 160,882	757	161,639
Sales tax	218,775	-	218,775
Other	141,850	-	141,850
Total receivables	$ 521,507	757	522,264

Accounts Receivable and Valuation Allowance, continued

	Major Enterprise Funds		Total Enterprise Funds
	Water & Sewer	Refuse	
Accounts	$ 410,667	171,715	582,382
Grants	687,699	-	687,699
Total receivables	1,098,366	171,715	1,270,081
Less allowance for doubtful receivables	(223,947)	(95,977)	(319,924)
Net receivables	$ 874,419	75,738	950,157

Governmental funds report deferred revenue in connection with receivables for revenues that are not considered to be available to liquidate liabilities of the current period. Governmental funds also defer revenue recognition in connection with resources that have been received, but not yet earned. At June 30, 2010, the deferred revenue reported in the governmental funds was comprised of the following:

Delinquent sales taxes receivable (General Fund)	$ 67,491
Jail upgrade grant (General Fund)	53,799
	$ 121,290

(4) **Capital Assets**

Capital asset activity for the year ended June 30, 2010 follows:

	Balance July 1, 2009	Additions and Reclass-ifications	Deletions and Reclass-ifications	Balance June 30, 2010
Governmental activities				
Capital assets not being depreciated -				
land and land improvements	$ 497,270	-	-	497,270
Capital assets being depreciated:				
Buildings	5,462,829	-	-	5,462,829
Machinery and equipment	2,016,816	-	-	2,016,816
Total assets being depreciated	7,479,645	-	-	7,479,645

Capital Assets, continued

	Balance July 1, 2009	Additions and Reclass-ifications	Deletions and Reclass-ifications	Balance June 30, 2010
Governmental activities, continued				
Capital assets being depreciated, continued:				
Less accumulated depreciation for:				
Buildings	$ 2,525,342	136,590	-	2,661,932
Machinery and equipment	1,449,699	98,192	-	1,547,891
Total accumulated depreciation	3,975,041	234,782	-	4,209,823
Total capital assets being depreciated, net	3,504,604	234,782	-	3,269,822
Governmental activity capital assets, net	$ 4,001,874	234,782	-	3,767,092
Business-type activities				
Capital assets not being depreciated:				
Land	$ 230,983	-	-	230,983
Construction in progress	7,798,794	4,935,630	(12,734,424)	-
Total assets not being depreciated	8,029,777	4,935,630	(12,734,424)	230,983
Capital assets being depreciated:				
Buildings	2,381,895	-	-	2,381,895
Improvements other than buildings	69,225,848	12,734,424	-	81,960,272
Machinery and equipment	2,398,308	223,867	-	2,622,175
Total assets being depreciated	74,006,051	12,985,291	-	86,964,342
Less accumulated depreciation for:				
Buildings	897,030	79,400	-	976,430
Improvements other than buildings	47,068,206	1,690,004	-	48,758,210
Machinery and equipment	1,553,544	133,847	-	1,687,391
Total accumulated depreciation	49,518,780	1,903,251	-	51,422,031
Total capital assets being depreciated, net	24,487,271	11,055,040	-	35,542,311
Business-type activity capital assets, net	$ 32,517,048	15,990,670	(12,734,424)	35,773,294

Capital Assets, continued

Depreciation expense was charged to the functions as follows:

Governmental activities	
General government	$ 17,855
Public safety	134,297
Public works	45,130
Adult Center operations	37,500
Total depreciation expense – governmental activities	$ 234,782
Business-type activities	
Water and sewer utility	1,790,389
Refuse	112,862
Total depreciation expense – business-type activities	$ 1,903,251

(5) **Interfund Receivables, Payables, and Transfers**

A schedule of interfund balances and transfers for the year ended June 30, 2010, follows:

Due from other funds:	
Due to the General Fund from the Refuse Enterprise Fund to cover operating costs	$ 139,159
Due to the General Fund from the Package Store Enterprise Fund to cover operating costs	21,101
Due to the General Fund from nonmajor governmental funds for advances to cover capital costs	20,830
Total amount due from other funds	$ 181,090
Transfers:	
From the General Fund to nonmajor governmental fund to cover operating costs	$ 53,458
From Gaming Special Revenue Fund to a nonmajor governmental fund to cover operating costs	78,000
From City Match Capital Project Fund to the General Fund to close the fund	23,988
Total transfers to other funds	$ 155,446

(6) **Long-Term Debt**

The following is a summary of long-term debt transactions of the City for the year ended June 30, 2010:

Governmental activities	Balance July 1, 2009	Additions	Retired	Balance June 30, 2010	Due Within One Year
Accrued leave	$ 272,759	357,300	404,190	225,869	225,869

The long-term liabilities related to governmental activities are generally liquidated by the General Fund.

Business-type activities	Balance July 1, 2009	Additions	Retired	Balance June 30, 2010	Due Within One Year
Accrued leave	$ 52,496	73,293	66,020	59,769	59,769

(7) **Municipal Landfill Closure and Postclosure Liability**

State and federal laws and regulations require the City to place a final cover on its landfill site when it stops accepting waste and to perform certain maintenance and monitoring functions at the site for 30 years after closure. Although closure and postclosure care costs will be paid only near or after the date the landfill stops accepting waste, generally accepted accounting principles require that the City report a portion of these closure and postclosure care costs each period based on landfill capacity used as of each balance sheet date.

Management estimates that two of the three existing cells are approximately 100% full and the other cell is approximately 75% full. Cells one and two are partially capped but will need an additional 5,000 cubic yards of cover material. It is estimated that cell three will need approximately 17,000 cubic yards in addition to the 9,000 cubic yards already stockpiled. The $382,413 reported as landfill closure liability at June 30, 2010 represents the cumulative amount reported to date based on the usage of the three cells capacity. The City will recognize the remaining estimated cost of the closure of $217,587 as the remaining expected usage is filled. These amounts are based on what it would cost to perform the closure in 2010. Actual costs may be higher due to inflation, changes in technology or changes in regulations. The remaining life of the cell currently being used is estimated to be approximately 5 years.

(8) **Defined Benefit Pension Plan**

The City participates in the Public Employees' Retirement System (PERS). PERS is a cost-sharing multiple employer plan which covers eligible State and local government employees, other than teachers. The plan was established and is administered by the State of Alaska Department of Administration to provide pension, postemployment healthcare, death, and disability benefits. Benefit and contribution provisions are established by State law and may be amended only by the State Legislature.

The plan is included in a comprehensive annual financial report that includes financial statements and other required supplemental information. The report is available at the following address:

Department of Administration
Division of Retirement and Benefits
P.O. Box 110203
Juneau, Alaska 99811-0203

Conversion to Cost Sharing

In April 2008, the Alaska Legislature passed Senate Bill (SB) 125 which converted the existing Public Employees Retirement System (PERS) from an agent-multiple employer plan to a cost-sharing plan with an effective date of July 1, 2008. Under the cost-sharing arrangement, the State of Alaska Division of Retirement and Benefits no longer tracks individual employer assets and liabilities. Rather, all plan costs and past service liabilities are shared among all participating employers. The cost-sharing plan requires a uniform employer contribution rate of 22% of active member wages, subject to a wage floor. Legislation provides for State contributions in the event that the annually calculated and board adopted rate, which includes a provision to pay down the past-service liability, exceeds 22%. Any such additional contributions are recognized by each employer as an on-behalf payment.

In addition, in fiscal year 2008, the State of Alaska passed legislation (SB 123) which requires that the employer contribution be calculated on all PERS eligible wages, including wages attributable to the defined contribution plan described later in these footnotes.

Funding Policy

Regular employees are required to contribute 6.75% of their annual covered salary (2.5% for pension and 4.25% for healthcare). Police and firefighters are required to contribute 7.5% of their annual covered salary (2.78% for pension and 4.72% for healthcare).

The funding policy provides for periodic employer contributions based on actuarially determined rates that, expressed as a percentage of annual covered payroll, are sufficient to accumulate assets to pay both pension and postemployment healthcare benefits when due.

Defined Benefit Pension Plan, continued

Funding Policy, continued

Under current legislation, the employer contribution rate is statutorily capped at 22%, however, the State of Alaska contributes any amount over 22% such that the total contribution equals the Alaska Retirement Management Board adopted rate, generally consistent with the actuarially determined rate.

The City's contribution rates for 2010 were determined as part of the June 30, 2007 actuarial valuation and are as follows:

	Contractual Rate	ARM Board Adopted Rate	GASB 45* Rate
Pension	8.16%	10.25%	10.72%
Postemployment healthcare	13.84%	17.40%	53.96%
Total contribution rate	22.00%	27.65%	64.68%

*Using the 4.5% OPEB discount rate and disregarding future Medicare Part D payments.

The projection of future benefits for an ongoing plan involves estimates of the value of reported amounts and assumptions about the probability of occurrence of events far into the future. Examples include assumptions about future employment, mortality, and the healthcare cost trend. Amounts determined regarding the funded status of the plan and the annual required contributions of the employer are subject to continual revision as actual results are compared with past expectations and new estimates are made about the future.

Projections of benefits are based on the substantive plan (the plan as understood by the employer and plan members) and include the types of benefits in force at the valuation date and the pattern of sharing benefit costs between the City and the plan members at that point. Actuarial calculations reflect a long-term perspective and employ methods and assumptions that are designed to reduce short-term volatility in actuarial accrued liabilities and the actuarial values of assets.

Projected benefits for financial reporting purposes do not incorporate any potential effects of legal or contractual funding limitations.

Annual Pension and Postemployment Healthcare Cost

The City is required to contribute 22% of covered payroll, subject to a wage floor. In addition, the State of Alaska contributed approximately 5.65% of covered payroll to the Plan. In accordance with the provisions of GASB Statement Number 24, the City has recorded the State PERS on-behalf payment in the amount of $191,885 as revenues and expenditures. However, because the City is not statutorily obligated for these payments, this amount is excluded from pension and OPEB cost as described here. Only two years of information are available at this time.

Defined Benefit Pension Plan, continued

Annual Pension and Postemployment Healthcare Cost, continued

Year Ended June 30	Annual Pension Cost	Annual OPEB Cost	Total Benefit Cost (TBC)	City Contri-butions	% of TBC Contributed
2010	$ 255,360	$ 433,110	$ 688,470	$ 688,470	100%
2009	214,431	477,282	691,713	691,713	100%

(9) **Defined Contribution Pension Plan**

The State of Alaska Legislature approved Senate Bill 141 to create the Public Employees' Retirement System (PERS) Tier IV for employees hired after July 1, 2006 or for employees converting from the PERS Tier I, II or III defined benefit plans. The plan is administered by the State of Alaska, Department of Administration, and benefit and contribution provisions are established by State law and may be amended only by the State Legislature. The Alaska Retirement Management Board may also amend contribution requirements. Included in the plan are individual pension accounts, retiree medical insurance plan and a separate Health Reimbursement Arrangement account that will help retired members pay medical premiums and other eligible medical expenses not covered by the medical plan. Employees are required to contribute 8.0% of their annual covered salary, and the City is required to make the following contributions:

	Others Tier IV	Police/Fire Tier IV
Individual account	5.00%	5.00%
Health reimbursement arrangement (HRA) *	3.00	3.00
Retiree medical plan	0.99	0.99
Occupational death and disability benefits	0.58	1.33
	9.57 %	10.32%

*Health Reimbursement Arrangement – AS 39.30.370 requires that the employer contribute "an amount equal to three percent of the average employer's average annual employee compensation." For actual remittance, this amount is calculated as a flat rate for each full time or part-time employee per pay period.

Employees are immediately vested in their own contributions and vest 25% per year in employer contributions. The City and employee contributions to PERS including the HRA contribution for the year ended June 30, 2010 were $69,413 and $63,873, respectively.

(10) **Deferred Compensation Plan**

The City offers its employees a deferred compensation plan created in accordance with Internal Revenue Code Section 457. The plan, available to all full-time employees, permits them to defer a portion of their salary until future years. The deferred compensation is not available to employees until termination, retirement, death, or unforeseeable emergency. In accordance with the Internal Revenue Code, all assets and income of the plan are held in trust for the exclusive benefit of participants and their beneficiaries.

(11) **Risk Management**

The City faces a considerable number of risks of loss, including (a) damage to and loss of property and contents, (b) employee torts, (c) professional liability; i.e., errors and omissions, (d) environmental damage, (e) workers' compensation; i.e., employee injuries, and (f) medical insurance costs of employees. Commercial policies, transferring the risk of loss, except for relatively small deductible amounts, are purchased for employee medical costs. The City participates in the Alaska Municipal League Joint Insurance Association (AML/JIA) which provides insurance coverage for property and contents damage, torts, general and automobile liability, and workers' compensation. The City has no coverage for potential losses from environmental pollution damages. The AML/JIA is a public entity risk pool organized to share risks among its members. The Association's bylaws provide for the assessment of supplemental contributions from members in the event that losses and expenses for any coverage year exceed the annual contributions and income earned on such contributions for the year. Such supplemental contributions shall be based upon each member's annual deposit contribution in comparison to the aggregate annual deposit contributions of all members. The Association made no supplemental assessments during the year ended June 30, 2010. Coverage limits and the deductibles on the policies have stayed relatively constant for the last several years.

(12) **Contingencies**

Grants

Amounts received or receivable from granting agencies are subject to audit and adjustment by the granting agency. Any disallowed grant expenditures, including amounts already collected, would become a liability of the City.

The City, in the normal course of its activities, is involved in various claims and litigation. In the opinion of management and the City's legal counsel, the disposition of these matters is not expected to have a material adverse effect on the City's financial statements.

(13) **New Accounting Pronouncements**

The Governmental Accounting Standards Board has passed several new accounting standards with upcoming implementation dates covering several topics as follows:

- GASB 54 – *Fund Balance Reporting and Governmental Fund Type Definitions*
- GASB 57 – *OPEB Measurements by Agent Employers and Agent Multiple-Employer Plans*
- GASB 58 – *Accounting and Financial Reporting for Chapter 9 Bankruptcies*
- GASB 59 – *Financial Instruments Omnibus*

Of these statements, GASB 54 – Fund *Balance Reporting and Governmental Fund Type Definitions* will have a significant impact on the City's future financial reporting presentation. This statement will recategorize all existing fund balance classifications into five new categories:

- ✓ Nonspendable
- ✓ Restricted
- ✓ Committed
- ✓ Assigned
- ✓ Unassigned

The statement will require an analysis of all funds of the City to determine ongoing compliance with fund type categories as defined in the statement. GASB Statement 54 will be in effect for the City's financial statements for the year ended June 30, 2011.

Statements 57 through 59 are not expected to have any material impact on the financial statements.

SUPPLEMENTARY INFORMATION

Exhibit E-1

CITY OF KOTZEBUE, ALASKA
Nonmajor Governmental Funds
Combining Balance Sheet
June 30, 2010

Assets	Special Revenue Fund Adult Center	Capital Project Funds ANTHC Projects	Total Nonmajor Governmental Funds
Cash and investments	$ 5,979	-	5,979
Grants receivable	-	757	757
Total assets	$ 5,979	757	6,736
Liabilities and Fund Balances			
Liabilities:			
Accounts payable	3,518	-	3,518
Accrued payroll and payroll liabilities	2,461	-	2,461
Due to other funds	-	20,830	20,830
Total liabilities	5,979	20,830	26,809
Fund balances (deficit) - unreserved	-	(20,073)	(20,073)
Total liabilities and fund balances	$ 5,979	757	6,736

Exhibit E-2

CITY OF KOTZEBUE, ALASKA
Nonmajor Governmental Funds
Combining Statement of Revenues, Expenditures and
Changes in Fund Balances (Deficit)
Year Ended June 30, 2010

	Special Revenue Fund	Capital Project Funds		Total Nonmajor Governmental Funds
	Adult Center	City Match	ANTHC Projects	
Revenues:				
Adult Center	$ 50,584	-	-	50,584
State of Alaska	3,186	-	-	3,186
Total revenues	53,770	-	-	53,770
Expenditures - Adult Center operations	185,228	-	-	185,228
Excess of revenues over (under) expenditures	(131,458)	-	-	(131,458)
Other financing sources (uses):				
Transfers in	131,458	-	-	131,458
Transfers out	-	(23,988)	-	(23,988)
	131,458	(23,988)	-	107,470
Net change in fund balances	-	(23,988)	-	(23,988)
Fund balances (deficit), beginning of year	-	23,988	(20,073)	3,915
Fund balances (deficit), end of year	$ -	-	(20,073)	(20,073)

GENERAL FUND

The General Fund accounts for the financial operations of City of Kotzebue which are not accounted for in any other fund. Principal sources of revenues are intergovernmental revenues, charges for services, and sales tax. Primary expenditures in the General Fund are for general government, public safety and public works.

Exhibit F-1

CITY OF KOTZEBUE, ALASKA
General Fund
Balance Sheet
June 30, 2010
(With Comparative Amounts for 2009)

Assets	2010	2009
Cash and investments	$ 421,150	583,296
Receivables:		
Grants and shared revenues	160,882	110,485
Sales tax	218,775	227,692
Other	141,850	106,675
Total receivables	521,507	444,852
Prepaid items	23,280	21,000
Due from other funds	181,090	87,401
Total assets	$ 1,147,027	1,136,549
Liabilities and Fund Balance		
Liabilities:		
Accounts payable	112,556	101,308
Accrued payroll and payroll liabilities	142,065	164,218
Deferred revenue	121,290	116,872
Total liabilities	375,911	382,398
Fund balance:		
Reserved:		
Encumbrances	15,727	15,727
Prepaid items	23,280	21,000
Unreserved and undesignated	732,109	717,424
Total fund balance	771,116	754,151
Total liabilities and fund balance	$ 1,147,027	1,136,549

CITY OF KOTZEBUE, ALASKA
General Fund
Schedule of Revenues, Expenditures, and Changes in
Fund Balance - Budget and Actual
Year Ended June 30, 2010
(With Comparative Amounts for 2009)

	2010			2009
	Budget	Actual	Variance Positive (Negative)	Actual
Revenues:				
Taxes:				
Sales tax	$ 3,155,000	2,914,941	(240,059)	3,233,926
Hotel and bed tax	50,000	43,817	(6,183)	50,242
Alcohol use tax	40,000	27,097	(12,903)	35,639
Penalties and interest	17,500	5,051	(12,449)	12,642
Total taxes	3,262,500	2,990,906	(271,594)	3,332,449
Intergovernmental:				
Federal government:				
Local law enforcement grants	107,000	137,374	30,374	84,728
Asset forfeitures	15,000	1,139	(13,861)	27
Total federal government	122,000	138,513	16,513	84,755
State of Alaska:				
Jail contract	880,000	879,929	(71)	879,929
Telephone and electric	70,000	75,116	5,116	68,675
PERS relief	271,695	150,088	(121,607)	416,840
Local law enforcement grants	-	9,022	9,022	-
State revenue sharing	256,234	256,970	736	257,562
Total State of Alaska	1,477,929	1,371,125	(106,804)	1,623,006
Total intergovernmental	1,599,929	1,509,638	(90,291)	1,707,761
Charges for services:				
Administration fees	545,000	525,152	(19,848)	525,012
Ambulance services	375,000	647,729	272,729	302,634
Total charges for services	920,000	1,172,881	252,881	827,646
Investment income	20,000	8,574	(11,426)	37,074

CITY OF KOTZEBUE, ALASKA
General Fund
Schedule of Revenues, Expenditures and Changes in
Fund Balance - Budget and Actual, continued

	2010			2009
	Budget	Actual	Variance Positive (Negative)	Actual
Revenues, continued:				
Other revenues:				
Permits, licenses and fines	$ 9,700	28,780	19,080	10,898
Community activities	7,000	6,498	(502)	8,775
Other rentals and leases	12,382	41,200	28,818	13,464
Alarms monitoring	18,500	17,400	(1,100)	17,209
Other	92,700	101,846	9,146	41,459
Total other revenues	140,282	195,724	55,442	91,805
Total revenues	5,942,711	5,877,723	(64,988)	5,996,735
Expenditures:				
General government:				
City council and clerk:				
Personnel	118,595	125,399	(6,804)	131,654
Books and publications	500	-	500	579
Supplies	1,300	1,743	(443)	1,104
Other services and charges	2,500	3,737	(1,237)	2,241
Telephone	1,500	1,823	(323)	1,679
Travel and per diem	19,500	26,019	(6,519)	19,258
Training	750	1,800	(1,050)	850
Dues and memberships	4,100	1,120	2,980	5,512
Insurance	5,529	5,600	(71)	5,729
Advertising	1,000	4,003	(3,003)	1,820
Total City council and clerk	155,274	171,244	(15,970)	170,426
Administration:				
Personnel	598,074	557,364	40,710	668,599
Electricity	8,000	7,398	602	7,682
Heating fuel	10,000	8,861	1,139	11,382
Books and publications	200	1,691	(1,491)	1,750
Supplies	15,500	14,251	1,249	16,835
Other services and charges	4,600	30,616	(26,016)	6,937
Telephone	11,700	14,187	(2,487)	11,729
Travel and per diem	5,000	24,190	(19,190)	7,064
Training	500	500	-	390
Ambulance 3rd party billing fees	27,000	17,522	9,478	27,583

CITY OF KOTZEBUE, ALASKA
General Fund
Schedule of Revenues, Expenditures and Changes in
Fund Balance - Budget and Actual, continued

	2010			2009
	Budget	Actual	Variance Positive (Negative)	Actual
Expenditures, continued:				
General government, continued:				
Administration, continued:				
Dues and memberships	$ 500	285	215	350
Postage	7,000	4,023	2,977	4,685
Other consulting	8,000	103,419	(95,419)	8,351
Auditing and accounting	33,000	32,836	164	32,062
Legal	90,000	197,197	(107,197)	85,341
Insurance	28,955	29,119	(164)	30,392
Lobbying	110,000	106,834	3,166	124,649
Repairs and maintenance	46,100	33,903	12,197	32,967
Equipment and capital outlay	6,500	4,951	1,549	5,483
Total administration	1,010,629	1,189,147	(178,518)	1,084,231
Total general government	1,165,903	1,360,391	(194,488)	1,254,657
Public safety:				
Police:				
Personnel	882,139	862,424	19,715	977,516
Electricity	7,000	5,602	1,398	5,935
Forfeiture funds	30,000	7,001	22,999	19,884
Heating fuel	12,000	3,399	8,601	19,959
Clothing	6,000	3,788	2,212	5,081
Supplies	21,000	13,951	7,049	14,599
Other services and charges	31,500	1,751	29,749	2,303
Telephone	9,250	11,505	(2,255)	9,263
Travel and per diem	9,500	15,131	(5,631)	10,806
Training	1,000	321	679	725
Dues and memberships	500	375	125	519
Consulting	3,000	-	3,000	3,000
Insurance	56,208	56,526	(318)	58,704
Advertising	1,000	600	400	670
Repairs and maintenance	48,000	34,394	13,606	37,618
Equipment and capital outlay	5,000	2,943	2,057	4,852
Animal control	2,000	1,142	858	1,727
Total police	1,125,097	1,020,853	104,244	1,173,161

CITY OF KOTZEBUE, ALASKA
General Fund
Schedule of Revenues, Expenditures and Changes in
Fund Balance - Budget and Actual, continued

	2010			2009
	Budget	Actual	Variance Positive (Negative)	Actual
Expenditures, continued:				
Public safety, continued:				
Jail:				
Personnel	$ 815,466	787,417	28,049	853,649
Electricity	12,000	10,172	1,828	10,563
Heating fuel	55,000	58,478	(3,478)	58,973
Supplies	65,000	66,633	(1,633)	65,000
Other services and charges	500	50	450	175
Clothing	3,000	2,444	556	2,092
Telephone	6,000	7,080	(1,080)	5,879
Travel and per diem	6,500	8,292	(1,792)	6,178
Training	1,000	-	1,000	361
Television	500	412	88	354
Dues and memberships	1,500	1,520	(20)	1,500
Consulting	4,500	2,935	1,565	4,500
Insurance	44,857	45,111	(254)	49,715
Repairs and maintenance	66,499	2,407	64,092	10,040
Equipment and capital outlay	3,000	1,170	1,830	2,554
Total jail	1,085,322	994,121	91,201	1,071,533
Fire and emergency medical services:				
Personnel	629,303	642,395	(13,092)	686,955
Electricity	7,000	6,389	611	7,595
Heating fuel	55,000	56,309	(1,309)	68,796
Supplies	3,800	2,546	1,254	2,593
Other services and charges	300	187	113	284
Clothing	2,000	2,846	(846)	2,053
Telephone	3,800	5,955	(2,155)	4,375
Travel and per diem	6,000	1,016	4,984	4,592
Training	3,000	3,216	(216)	2,262
Insurance	38,983	39,204	(221)	39,634
Repairs and maintenance	23,000	27,167	(4,167)	25,695
Equipment and capital outlay	4,300	1,921	2,379	4,216
Total fire and emergency medical services	776,486	789,151	(12,665)	849,050
Total public safety	2,986,905	2,804,125	182,780	3,093,744

CITY OF KOTZEBUE, ALASKA
General Fund
Schedule of Revenues, Expenditures and Changes in
Fund Balance - Budget and Actual, continued

	2010			2009
	Budget	Actual	Variance Positive (Negative)	Actual
Expenditures, continued:				
Public works:				
Public works:				
Personnel	$ 974,975	900,788	74,187	1,124,038
Street lighting	23,500	29,035	(5,535)	28,275
Electricity	10,000	10,585	(585)	11,162
Heating fuel	135,000	111,251	23,749	145,124
Supplies	3,700	4,448	(748)	3,366
Other services and charges	500	404	96	827
Sign replacement	1,000	558	442	-
Clothing	1,000	1,090	(90)	996
Telephone	6,000	5,839	161	4,884
Travel and per diem	4,500	3,957	543	4,372
Training	2,000	625	1,375	1,125
Dues and memberships	100	10	90	10
Professional services	3,500	31,042	(27,542)	9,410
Insurance	53,887	54,192	(305)	66,682
Repairs and maintenance	270,000	182,853	87,147	456,869
Gravel	15,000	10,429	4,571	1,735
Equipment and capital outlay	6,131	9,964	(3,833)	7,778
Total public works	1,510,793	1,357,070	153,723	1,866,653
Capital projects:				
Personnel	214,033	187,922	26,111	274,607
Supplies	4,500	3,040	1,460	4,779
Other services and charges	500	2,475	(1,975)	3,891
Telephone	1,300	401	899	1,183
Travel and per diem	4,000	1,712	2,288	1,313
Training	1,500	100	1,400	495
Professional services	7,500	182	7,318	7,500
Insurance	9,366	9,419	(53)	8,986
Repairs and maintenance	4,500	185	4,315	3,621
Equipment and capital outlay	6,500	4,532	1,968	339
Total capital projects	253,699	209,968	43,731	306,714
Total public works	1,764,492	1,567,038	197,454	2,173,367

CITY OF KOTZEBUE, ALASKA
General Fund
Schedule of Revenues, Expenditures and Changes in
Fund Balance - Budget and Actual, continued

	2010			2009
	Budget	Actual	Variance Positive (Negative)	Actual
Expenditures, continued:				
Community services:				
Community activities	$ 30,000	26,067	3,933	24,071
4th of July expense	7,500	3,311	4,189	7,568
Employee morale and health	-	1,655	(1,655)	-
Heating fuel - Recreation Center	45,000	68,701	(23,701)	74,911
Total community services	82,500	99,734	(17,234)	106,550
Nondepartmental:				
Capital purchases	77,980	-	77,980	46,985
Employee benefits	50,000	-	50,000	92,239
Total nondepartmental	127,980	-	127,980	139,224
Total expenditures	6,127,780	5,831,288	296,492	6,767,542
Excess of revenues over (under) expenditures	(185,069)	46,435	231,504	(770,807)
Other financing sources (uses):				
Transfers in	-	23,988	23,988	-
Transfers out	(48,083)	(53,458)	(5,375)	(66,531)
Net other financing sources (uses)	(48,083)	(29,470)	18,613	(66,531)
Net change in fund balance	$ (233,152)	16,965	250,117	(837,338)
Fund balance, beginning of year		754,151		1,591,489
Fund balance, end of year		$ 771,116		754,151

SPECIAL REVENUE FUNDS

These funds account for revenues from specific sources that are designated to finance particular functions and activities.

Gaming - This fund accounts for the bingo and pulltab gaming activities.

Adult Center - This fund accounts for the activities of the Adult Center located in the Recreation Center building.

Exhibit G-1

CITY OF KOTZEBUE, ALASKA
Gaming Special Revenue Fund
Schedule of Revenues, Expenditures and
Changes in Fund Balance - Budget and Actual
Year Ended June 30, 2010
(With Comparative Amounts for 2009)

	2010			2009
	Budget	Actual	Variance Positive (Negative)	Actual
Revenues:				
Bingo and pull tabs	$ 1,245,000	1,111,675	(133,325)	1,243,535
State PERS relief	-	5,314	5,314	10,167
Total revenues	1,245,000	1,116,989	(128,011)	1,253,702
Expenditures:				
Personnel	147,061	140,627	6,434	151,494
Rent	30,800	29,700	1,100	29,150
Supplies	33,565	25,617	7,948	23,573
Payouts to winners	871,076	799,310	71,766	881,886
Donations	50,000	52,000	(2,000)	50,000
Insurance	6,398	5,131	1,267	6,411
Allocated administration	18,200	18,204	(4)	18,204
Other	9,900	8,832	1,068	8,339
Total expenditures	1,167,000	1,079,421	87,579	1,169,057
Excess of revenues over expenditures	78,000	37,568	(40,432)	84,645
Other financing uses - transfers out	(78,000)	(78,000)	-	(78,000)
Net change in fund balance	$ -	(40,432)	(40,432)	6,645
Fund balance, beginning of year		98,369		91,724
Fund balance, end of year		$ 57,937		98,369

Exhibit G-2

CITY OF KOTZEBUE, ALASKA
Adult Center Special Revenue Fund
Schedule of Revenues, Expenditures and
Changes in Fund Balance - Budget and Actual
Year Ended June 30, 2010
(With Comparative Amounts for 2009)

	2010			2009
	Budget	Actual	Variance Positive (Negative)	Actual
Revenues:				
Memberships	$ 12,000	18,625	6,625	16,495
Food and beverages	28,000	25,297	(2,703)	28,510
Rent	30,800	1,375	(29,425)	26,950
State PERS relief	2,334	3,186	852	5,083
Special events	3,750	5,287	1,537	3,180
Donations	-	-	-	23,174
Total revenues	76,884	53,770	(23,114)	103,392
Expenditures:				
Personnel	87,229	82,922	4,307	111,903
Utilities	60,000	67,118	(7,118)	87,190
Supplies	22,500	21,305	1,195	21,370
Other services and charges	2,000	2,516	(516)	2,099
Insurance	8,777	8,827	(50)	8,238
Repairs and maintenance	13,000	2,540	10,460	17,123
Total expenditures	193,506	185,228	8,278	247,923
Excess of revenues over (under) expenditures	(116,622)	(131,458)	(14,836)	(144,531)
Other financing sources - transfers in	116,622	131,458	14,836	144,531
Net change in fund balance	$ -	-	-	-
Fund balance, beginning of year		-		-
Fund balance, end of year	$	-		-

ENTERPRISE FUNDS

Enterprise Funds account for operations that are financed and operated in a manner similar to private business operations.

Water and Sewer Utility - This fund accounts for the operations of the water and sewer system.

Refuse - This fund accounts for the operations of the refuse collection service, baler and balefill.

Package Store and Distribution Site – This fund accounts for the operations of the City owned package store and beverage delivery site.

Exhibit H-1

CITY OF KOTZEBUE, ALASKA
Water and Sewer Utility Enterprise Fund
Statement of Net Assets
June 30, 2010
(With Comparative Amounts for 2009)

Assets	2010	2009
Current assets:		
Cash and investments	$ 1,591,569	1,514,838
Receivables:		
Accounts	410,667	350,326
Allowance for doubtful receivables	(223,947)	(199,140)
Grants	687,699	1,492,132
Net receivables	874,419	1,643,318
Total current assets	2,465,988	3,158,156
Property, plant, and equipment:		
Improvements other than buildings	79,860,139	67,125,715
Machinery and equipment	1,696,199	1,472,332
Construction in progress	-	7,798,794
Total property, plant, and equipment	81,556,338	76,396,841
Accumulated depreciation	(47,582,269)	(45,791,880)
Net property, plant, and equipment	33,974,069	30,604,961
Total assets	$ 36,440,057	33,763,117

Liabilities and Net Assets		
Liabilities:		
Accounts payable	20,822	773,260
Accrued payroll and payroll liabilities	17,334	23,542
Accrued leave	45,785	32,385
Deferred revenue	-	10,467
Deposits	195	195
Total liabilities	84,136	839,849
Net assets:		
Invested in capital assets	33,974,069	30,604,961
Unrestricted	2,381,852	2,318,307
Total net assets	36,355,921	32,923,268
Total liabilities and net assets	$ 36,440,057	33,763,117

Exhibit H-2

CITY OF KOTZEBUE, ALASKA
Water and Sewer Utility Enterprise Fund
Statement of Revenues, Expenses and Changes in Net Assets
Year Ended June 30, 2010
(With Comparative Amounts for 2009)

	2010	2009
Operating revenues:		
Water use charges and connect fees	$ 1,239,480	1,211,749
Sewer use charges and connect fees	573,837	523,900
Penalties and interest	19,112	20,344
Total operating revenues	1,832,429	1,755,993
Operating expenses:		
Administration:		
Postage	2,217	2,127
Credit card charges	4,095	18,236
Allocated administrative fees	338,584	338,304
Capital outlay	2,078	-
Total administration	346,974	358,667
Water:		
Personnel	324,853	387,416
Electricity	129,195	121,810
Heating fuel	221,142	384,109
Building maintenance	1,773	9,332
Supplies	215,828	205,832
Telephone	6,361	5,828
Travel	4,522	1,587
Training	1,709	430
Professional services	52,082	49,559
Insurance	37,562	39,576
Repairs and maintenance	8,154	6,363
Other	1,454	1,763
Total water	1,004,635	1,213,605

CITY OF KOTZEBUE, ALASKA
Water and Sewer Utility Enterprise Fund
Statement of Revenues, Expenses and Changes in Net Assets, continued

		2010	2009
Operating expenses, continued:			
Sewer:			
Personnel	$	295,683	324,164
Electricity		47,000	47,252
Supplies		27,422	43,474
Travel		1,431	1,303
Training		170	370
Professional services		533	1,300
Insurance		27,541	25,648
Repairs and maintenance		36,167	64,505
Capital outlay		-	6,384
Other		509	1,779
Total sewer		436,456	516,179
Depreciation		1,790,389	1,601,631
Total operating expenses		3,578,454	3,690,082
Loss from operations		(1,746,025)	(1,934,089)
Nonoperating revenues (expenses):			
Equipment rental		6,109	7,625
Equipment sales		1,706	1,014
State PERS relief		21,466	61,001
Miscellaneous revenue (expense)		(500)	50
Net nonoperating revenues (expenses)		28,781	69,690
Loss before contributions and special item		(1,717,244)	(1,864,399)
Capital contributions		5,149,897	5,741,498
Special item - write off of NPO/OPEB		-	14,476
Change in net assets		3,432,653	3,891,575
Net assets, beginning of year		32,923,268	29,031,693
Net assets, end of year	$	36,355,921	32,923,268

Exhibit H-3

CITY OF KOTZEBUE, ALASKA
Water and Sewer Utility Enterprise Fund
Statement of Cash Flows
Year Ended June 30, 2010
(With Comparative Amounts for 2009)

	2010	2009
Cash flows from operating activities:		
Receipts from customers and users	$ 1,793,743	1,817,815
Payments to suppliers	(1,581,383)	(842,285)
Payments to employees	(591,878)	(649,227)
Payments for interfund services used	(338,584)	(338,304)
Net cash flows from operating activities	(718,102)	(12,001)
Cash flows from capital and related financing activities:		
Acquisition and construction of capital assets	(5,159,497)	(5,741,498)
Capital contributions received	5,954,330	5,405,978
Net cash flows from capital and related financing activities	794,833	(335,520)
Net increase (decrease) in cash and investments	76,731	(347,521)
Cash and investments, beginning of year	1,514,838	1,862,359
Cash and investments, end of year	$ 1,591,569	1,514,838
Reconciliation of loss from operations to net cash provided (used) by operating activities:		
Loss from operations	(1,746,025)	(1,934,089)
Adjustments to reconcile loss from operations to net cash flows from operating activities:		
Miscellaneous nonoperating revenues	7,315	8,689
Noncash expense - PERS relief	21,466	61,001
Increase in allowance for doubtful accounts	24,807	51,909
Depreciation	1,790,389	1,601,631
Increase in assets - accounts receivable	(60,341)	(621)
Increase (decrease) in liabilities:		
Accounts payable	(752,438)	196,282
Accrued payroll and payroll liabilities	(6,208)	(64)
Accrued leave	13,400	1,416
Deferred revenue	(10,467)	1,845
Net cash flows from operating activities	$ (718,102)	(12,001)

CITY OF KOTZEBUE, ALASKA
Water and Sewer Utility Enterprise Fund
Combining Schedule of Water and Sewer Capital Projects
Year Ended June 30, 2010

		Sewage Lagoon Upgrade	2007 Sanitation Utilities Develop-ment	2008 Sanitation Utilities Develop-ment	Totals
Funding sources:					
Federal government	$	12,221	742,947	3,076,117	3,831,285
State of Alaska		4,074	248,130	1,025,372	1,277,576
Other		-	50,636	-	50,636
Total funding sources	$	16,295	1,041,713	4,101,489	5,159,497
Expenditures - capital outlay	$	16,295	1,041,713	4,101,489	5,159,497

Exhibit H-5

CITY OF KOTZEBUE, ALASKA
Refuse Enterprise Fund
Statement of Net Assets
June 30, 2010
(With Comparative Amounts for 2009)

Assets	2010	2009
Current assets -		
Receivables:		
Accounts	$ 171,715	129,573
Allowance for doubtful accounts	(95,977)	(77,554)
Net receivables	75,738	52,019
Total current assets	75,738	52,019
Property, plant, and equipment:		
Land	230,983	230,983
Buildings	2,381,895	2,381,895
Improvements other than buildings	2,100,133	2,100,133
Machinery and equipment	925,976	925,976
Total property, plant, and equipment	5,638,987	5,638,987
Accumulated depreciation	(3,839,762)	(3,726,900)
Net property, plant and equipment	1,799,225	1,912,087
Total assets	$ 1,874,963	1,964,106
Liabilities and Net Assets		
Liabilities:		
Current liabilities:		
Accounts payable	5,533	6,614
Accrued payroll and payroll liabilities	11,217	13,735
Accrued leave	13,984	20,111
Due to other funds	139,159	66,571
Total current liabilities	169,893	107,031
Landfill closure costs	382,413	590,987
Total liabilities	552,306	698,018
Net assets:		
Invested in capital assets	1,799,225	1,912,087
Unrestricted (deficit)	(476,568)	(645,999)
Total net assets	1,322,657	1,266,088
Total liabilities and net assets	$ 1,874,963	1,964,106

CITY OF KOTZEBUE, ALASKA
Refuse Enterprise Fund
Statement of Revenues, Expenses and Changes in Net Assets
Year Ended June 30, 2010
(With Comparative Amounts for 2009)

	2010	2009
Operating revenues - refuse collection services	$ 700,601	675,862
Operating expenses:		
Personnel	347,264	375,331
Electricity	18,665	19,688
Heating fuel	61,093	78,428
Gas and oil	21,207	20,391
Building maintenance	7,652	2,424
Supplies	62,416	58,185
Telephone	1,871	1,609
Professional fees	106	2,076
Insurance	27,541	28,469
Travel	1,754	964
Training	175	190
Repairs and maintenance	19,054	22,646
Allocated administrative fees	168,504	168,504
Clothing/safety equipment	3,228	4,063
Spring cleanup	2,173	5,000
Small tools	2,154	3,226
Operating permit	4,233	-
Equipment rental	-	6,544
Closure costs	-	37,638
Depreciation	112,862	112,973
Miscellaneous	647	621
Total operating expenses	862,599	948,970
Loss from operations	(161,998)	(273,108)
Nonoperating revenues:		
State PERS relief	11,831	15,250
Landfill closure liability reduction	205,273	-
Miscellaneous revenue	1,463	475
Total nonoperating revenues	218,567	15,725
Income (loss) before special item	56,569	(257,383)
Special item - write off of NPO/OPEB	-	8,821
Change in net assets	56,569	(248,562)
Net assets, beginning of year	1,266,088	1,514,650
Net assets, end of year	$ 1,322,657	1,266,088

Exhibit H-7

CITY OF KOTZEBUE, ALASKA
Refuse Enterprise Fund
Statement of Cash Flows
Year Ended June 30, 2010
(With Comparative Amounts for 2009)

		2010	2009
Cash flows from operating activities:			
Receipts from customers	$	678,345	703,929
Payments to suppliers		(238,351)	(261,541)
Payments to employees		(344,078)	(363,052)
Payments for interfund services used		(168,504)	(168,504)
Net cash flows from operating activities		(72,588)	(89,168)
Cash flows from noncapital financing activities - increase in due to other funds		72,588	66,571
Net decrease in cash and investments		-	(22,597)
Cash and investments, beginning of year		-	22,597
Cash and investments, end of year	$	-	-
Reconciliation of loss from operations to net cash provided (used) by operating activities:			
Loss from operations		(161,998)	(273,108)
Adjustments to reconcile loss from operations to net cash flows from operating activities:			
Miscellaneous nonoperating revenues		1,463	475
Noncash expense - PERS relief		11,831	15,250
Increase in allowance for doubtful accounts		18,423	21,169
Depreciation		112,862	112,973
(Increase) decrease in assets - accounts receivable		(42,142)	6,423
Increase (decrease) in liabilities:			
Accounts payable		(1,081)	4,205
Accrued payroll and payroll liabilities		(2,518)	1,974
Accrued leave		(6,127)	(4,945)
Landfill closure costs		(3,301)	26,416
Net cash flows from operating activities	$	(72,588)	(89,168)

Exhibit H-8

CITY OF KOTZEBUE, ALASKA
Package Store Enterprise Fund
Statement of Net Assets
June 30, 2010

Liabilities and Net Assets	
Liabilities:	
Accounts payable	$ 8,435
Due to other funds	21,101
Total liabilities	29,536
Net assets (deficit)	(29,536)
Total liabilities and net assets	$ -

Exhibit H-9

CITY OF KOTZEBUE, ALASKA
Package Store Enterprise Fund
Statement of Revenues, Expenses and Changes in Net Assets
Year Ended June 30, 2010

Revenues	$ -
Expenses:	
Personnel	5,609
Building maintenance and supplies	18,614
Professional fees	3,658
Miscellaneous	1,655
Total expenses	29,536
Change in net assets	(29,536)
Net assets, beginning of year	-
Net assets, end of year	$ (29,536)

CITY OF KOTZEBUE, ALASKA
Package Store Enterprise Fund
Statement of Cash Flows
Year Ended June 30, 2010

Cash flows from operating activities:	
Payments to suppliers	$ (15,492)
Payments to employees	(5,609)
Net cash flows from operating activities	(21,101)
Cash flows from noncapital financing activities -	
Increase in due to other funds	21,101
Net increase in cash and investments	-
Cash and investments, beginning of year	-
Cash and investments, end of year	$ -
Reconciliation of loss from operations to net cash provided (used) by operating activities:	
Loss from operations	(29,536)
Adjustments to reconcile loss from operations to net cash flows from operating activities:	
Increase in liabilities - accounts payable	8,435
Net cash flows from operating activities	$ (21,101)

Exhibit I-1

CITY OF KOTZEBUE, ALASKA
Schedule of Expenditures of Federal Awards
Year Ended June 30, 2010

Federal Grant Title	Grant Number	Catalog of Federal Domestic Assistance Number	Total Grant Award	July 1, 2009 Receivable	Federal Share of Expend-itures	Federal Receipts	June 30, 2010 Receivable
Department of Agriculture							
Water and Waste Disposal Systems for Rural Communities:							
2005 Sanitation Utilities (Federal share)	51522	10.760	$ 6,806,200	188,147	-	-	188,147
2007 Sanitation Utilities	N/A	10.760	6,375,000	529,258	742,947	1,267,620	4,585
2008 Sanitation Utilities	N/A	10.760	5,274,461	106,679	3,076,117	3,040,873	141,923
Total Water and Waste Disposal Systems for Rural Communities				824,084	3,819,064	4,308,493	334,655
Environmental Protection Agency							
Passed through the State of Alaska Department of Environmental Conservation - Surveys, Studies, Investigations and Special Purpose Grants - Sewage Lagoon (Federal share)	51520	66.606	3,380,625	44,845	12,221	-	57,066
Department of Homeland Security							
Assistance to Firefighters:							
FY 2007	EMW-2007-FO-12061	97.044	114,570	(13,364)	13,364	-	-
FY 2008	EMW-2008-FO-05281	97.044	26,703	-	15,675	15,675	-
Total CFDA No. 97.044				(13,364)	29,039	15,675	-
Passed through the State of Alaska Department of Transportation and Public Facilities - Law Enforcement Officer Reimbursement Agreement Program (Federal share)	HSTS0208HSLR358	97.090	146,183	4,018	47,363	31,814	19,567
Total Department of Homeland Security				(9,346)	76,402	47,489	19,567
Department of Justice							
Passed through the State of Alaska Department of Public Safety - Federal Asset Forfeitures	FY10 Asset Forfeiture	16.000	1,139	-	1,139	1,139	-
Total Federal Financial Assistance			$	859,583	3,908,826	4,357,121	411,288

Exhibit J-1

CITY OF KOTZEBUE, ALASKA
Schedule of State Financial Assistance
Year Ended June 30, 2010

State Grant Title	Grant Number	Total Grant Award	July 1, 2009 Receivable	State Share of Expenditures	State Receipts	June 30, 2010 Receivable
Department of Commerce, Community and Economic Development						
* Community Revenue Sharing	FY10	$ 256,970	-	256,970	255,470	1,500
Department of Environmental Conservation						
Sewage Lagoon Expansion (State share)	51520	1,126,875	14,948	4,074	-	19,022
2005 Sanitation Utilities Development (State share)	51522	2,268,800	62,715	-	-	62,715
* 2007 Sanitation Utilities	07RJ87	2,125,000	455,900	248,130	538,091	165,939
* 2008 Sanitation Utilities Development	51526	1,810,750	78,896	1,025,372	1,056,712	47,556
Total Department of Environmental Conservation			612,459	1,277,576	1,594,803	295,232
Department of Public Safety						
Multijurisdictional Task Force	JAG10-023F	60,972	-	60,972	-	60,972
Department of Transportation and Public Facilities						
Law Enforcement Officer Reimbursement Agreement Program (State share)	HSTS0208HSLR358	28,164	766	9,022	6,061	3,727
Department of Administration						
* PERS on Behalf	FY10	191,885	-	191,885	191,885	-
Department of Revenue						
Electric and Telephone Co-op Tax	FY09	68,675	68,675	-	68,675	-
* Electric and Telephone Co-op Tax	FY10	75,116	-	75,116	-	75,116
Total Department of Revenue			68,675	75,116	68,675	75,116
Total State Financial Assistance		$ 681,900	1,871,541	2,116,894	436,547	

*Major program

CITY OF KOTZEBUE, ALASKA

Notes to the Schedules of Expenditures of Federal Awards
and State Financial Assistance

Year Ended June 30, 2010

Basis of Presentation

The accompanying Schedules of Expenditures of Federal Awards and State Financial Assistance include the grant activity of City of Kotzebue and are presented on the modified accrual basis of accounting. The information in the schedules is presented in accordance with the requirements of OMB Circular A-133, *Audits of States, Local Governments, and Non-Profit Organizations* and the *State of Alaska Audit Guide and Compliance Supplement for State Single Audits*.

(This page left blank intentionally)

SINGLE AUDIT SECTION

Mikunda, Cottrell & Co., Inc.
Certified Public Accountants & Consultants

An Independently Owned Member
McGLADREY ALLIANCE | McGladrey

Offices in Anchorage & Kenai

Independent Auditor's Report on Internal Control Over Financial Reporting and on Compliance and Other Matters Based on an Audit of Financial Statements Performed in Accordance with *Government Auditing Standards*

Honorable Mayor and City Council
City of Kotzebue, Alaska

We have audited the financial statements of the governmental activities, the business-type activities, each major fund, and the aggregate remaining fund information of the City of Kotzebue, Alaska, as of and for the year ended June 30, 2010, which collectively comprise the City's basic financial statements and have issued our report thereon dated November 19, 2010. We conducted our audit in accordance with auditing standards generally accepted in the United States of America and the standards applicable to financial audits contained in *Government Auditing Standards*, issued by the Comptroller General of the United States.

Internal Control Over Financial Reporting

In planning and performing our audit, we considered the City of Kotzebue's internal control over financial reporting as a basis for designing our auditing procedures for the purpose of expressing our opinions on the financial statements, but not for the purpose of expressing an opinion on the effectiveness of the City of Kotzebue's internal control over financial reporting. Accordingly, we do not express an opinion on the effectiveness of the City of Kotzebue's internal control over financial reporting.

A *deficiency in internal control* exists when the design or operation of a control does not allow management or employees, in the normal course of performing their assigned functions, to prevent, or detect and correct misstatements on a timely basis. A *material weakness* is a deficiency, or combination of deficiencies, in internal control, such that there is a reasonable possibility that a material misstatement of the entity's financial statements will not be prevented, or detected and corrected on a timely basis.

Our consideration of internal control over financial reporting was for the limited purpose described in the first paragraph of this section and was not designed to identify all deficiencies in internal control over financial reporting that might be deficiencies, significant deficiencies or material weaknesses. We did not identify any deficiencies in internal control over financial reporting that we consider to be material weaknesses, as defined above. However, we identified certain deficiency in internal control over financial reporting, described in the accompanying Schedule of Findings and Questioned Costs as items 10-1 and 10-2, that we consider to be significant deficiencies in internal control over financial reporting. A significant deficiency is a deficiency or a combination of deficiencies in internal control that is less then severe than a material weakness, yet important enough to merit attention by those charged with governance.

3601 "C" Street, Suite 600 * Anchorage, Alaska 99503 * (907) 278-8878 * Fax (907) 278-5779 * www.mcc-cpa.com

Honorable Mayor and City Council
City of Kotzebue, Alaska

Compliance and Other Matters

As part of obtaining reasonable assurance about whether the City of Kotzebue's financial statements are free of material misstatement, we performed tests of its compliance with certain provisions of laws, regulations, contracts, and grant agreements, noncompliance with which could have a direct and material effect on the determination of financial statement amounts. However, providing an opinion on compliance with those provisions was not an objective of our audit and, accordingly, we do not express such an opinion. The results of our tests disclosed no instances of noncompliance or other matters that are required to be reported under *Government Auditing Standards*.

The City of Kotzebue's response to the findings identified in our audit are described in the accompanying schedule of findings and questioned costs. We did not audit the City's response and, accordingly, we express no opinion on it.

This report is intended solely for the information and use of the City of Kotzebue's management, Honorable Mayor and City Council, others within the entity, federal and state awarding agencies, and, if applicable, pass-through entities, and is not intended to be and should not be used by anyone other than these specified parties.

Mikunda, Cottrell & Co.

Anchorage, Alaska
November 19, 2010

Mikunda, Cottrell & Co., Inc.
Certified Public Accountants & Consultants

An Independently Owned Member
McGLADREY ALLIANCE | McGladrey

Offices in Anchorage & Kenai

Independent Auditor's Report on Compliance with Requirements That Could Have a Direct and Material Effect on Each Major Program and on Internal Control Over Compliance in Accordance with OMB Circular A-133

Honorable Mayor and City Council
City of Kotzebue, Alaska

Compliance

We have audited the compliance of the City of Kotzebue with the types of compliance requirements described in the *OMB Circular A-133, Compliance Supplement* that could have a direct and material effect on each of its major federal programs for the year ended June 30, 2010. The City of Kotzebue's major federal programs are identified in the summary of auditor's results section of the accompanying Schedule of Findings and Questioned Costs. Compliance with the requirements of laws, regulations, contracts, and grants applicable to each of its major federal programs is the responsibility of the City of Kotzebue's management. Our responsibility is to express an opinion on the City of Kotzebue's compliance based on our audit.

We conducted our audit of compliance in accordance with auditing standards generally accepted in the United States of America; the standards applicable to financial audits contained in *Government Auditing Standards*, issued by the Comptroller General of the United States; and OMB Circular A-133, *Audits of States, Local Governments, and Non-Profit Organizations*. Those standards and OMB Circular A-133 require that we plan and perform the audit to obtain reasonable assurance about whether noncompliance with the types of compliance requirements referred to above that could have a direct and material effect on a major federal program occurred. An audit includes examining, on a test basis, evidence about the City of Kotzebue's compliance with those requirements and performing such other procedures as we considered necessary in the circumstances. We believe that our audit provides a reasonable basis for our opinion. Our audit does not provide a legal determination of the City of Kotzebue's compliance with those requirements.

In our opinion, the City of Kotzebue complied, in all material respects, with the compliance requirements referred to above that could have a direct and material effect on each of its major federal programs for the year ended June 30, 2010.

3601 "C" Street, Suite 600 * Anchorage, Alaska 99503 * (907) 278-8878 * Fax (907) 278-5779 * www.mcc-cpa.com

Honorable Mayor and City Council
City of Kotzebue, Alaska

Internal Control Over Compliance

The management of the City of Kotzebue is responsible for establishing and maintaining effective internal control over compliance with the requirements of laws, regulations, contracts, and grants applicable to federal programs. In planning and performing our audit, we considered the City of Kotzebue's internal control over compliance with the requirements that could have a direct and material effect on a major federal program to determine the auditing procedures for the purpose of expressing our opinion on compliance and to test and report on internal control over compliance in accordance with OMB Circular A-133, but not for the purpose of expressing an opinion on the effectiveness of internal control over compliance. Accordingly, we do not express an opinion on the effectiveness of the City of Kotzebue's internal control over compliance.

A *deficiency in internal control over compliance* exists when the design or operation of a control over compliance does not allow management or employees, in the normal course of performing their assigned functions, to prevent, or detect and correct, noncompliance with a type of compliance requirement of a federal program on a timely basis. A *material weakness in internal control over compliance* is a deficiency, or combination of deficiencies, in internal control over compliance, such that there is a reasonable possibility that material noncompliance with a type of compliance requirement of a federal program will not be prevented, or detected and corrected, on a timely basis.

Our consideration of the internal control over compliance was for the limited purpose described in the first paragraph of this section and was not designed to identify all deficiencies in internal control over compliance that might be deficiencies, significant deficiencies, or material weaknesses. We did not identify any deficiencies in internal control over compliance that we consider to be material weaknesses, as defined below.

This report is intended solely for the information and use of the City of Kotzebue's management, Honorable Mayor and City Council, federal awarding agencies and, if applicable, pass-through entities, and is not intended to be and should not be used by anyone other than these specified parties.

Mikunda, Cottrell & Co.

Anchorage, Alaska
November 19, 2010

Mikunda, Cottrell & Co., Inc.
Certified Public Accountants & Consultants

An Independently Owned Member
McGLADREY ALLIANCE | McGladrey

Offices in Anchorage & Kenai

Independent Auditor's Report on Compliance with Requirements That Could Have a Direct and Material Effect on Each Major Program and on Internal Control Over Compliance in Accordance with the *State of Alaska Audit Guide and Compliance Supplement for State Single Audits*

Honorable Mayor and City Council
City of Kotzebue, Alaska

Compliance

We have audited the compliance of the City of Kotzebue with the types of compliance requirements described in the *State of Alaska Audit Guide and Compliance Supplement for State Single Audits* that could have a direct and material effect on each of its major state programs for the year ended June 30, 2010. The City of Kotzebue's major state programs are identified in the accompanying Schedule of State Financial Assistance. Compliance with laws, regulations, contracts, and grants applicable to each of its major state programs is the responsibility of the City of Kotzebue's management. Our responsibility is to express an opinion on the City of Kotzebue's compliance based on our audit.

We conducted our audit of compliance in accordance with auditing standards generally accepted in the United States of America; the standards applicable to financial audits contained in *Government Auditing Standards* issued by the Comptroller General of the United States and the *State of Alaska Audit Guide and Compliance Supplement for State Single Audits*. Those standards and *the State of Alaska Audit Guide and Compliance Supplement for State Single Audits* require that we plan and perform the audit to obtain reasonable assurance about whether noncompliance with the types of compliance requirements referred to above that could have a direct and material effect on a major state program occurred. An audit includes examining, on a test basis, evidence about the City of Kotzebue's compliance with those requirements and performing such other procedures as we considered necessary in the circumstances. We believe that our audit provides a reasonable basis for our opinion. Our audit does not provide a legal determination of the City of Kotzebue's compliance with those requirements.

In our opinion, the City of Kotzebue complied, in all material respects, with the requirements referred to above that could have a direct and material effect on each of its major state programs for the year ended June 30, 2010.

3601 "C" Street, Suite 600 * Anchorage, Alaska 99503 * (907) 278-8878 * Fax (907) 278-5779 * www.mcc-cpa.com

Honorable Mayor and City Council
City of Kotzebue, Alaska

Internal Control Over Compliance

The management of the City of Kotzebue is responsible for establishing and maintaining effective internal control over compliance with the requirements of laws, regulations, contracts, and grants applicable to state programs. In planning and performing our audit, we considered the City of Kotzebue's internal control over compliance with the requirements that could have a direct and material effect on a major state program to determine the auditing procedures for the purpose of expressing our opinion on compliance and to test and report on internal control over compliance in accordance with the *State of Alaska Audit Guide and Compliance Supplement for State Single Audits,* but not for the purpose of expressing an opinion on the effectiveness of internal control over compliance. Accordingly, we do not express an opinion on the effectiveness of the City of Kotzebue's internal control over compliance.

A *deficiency in internal control over compliance* exists when the design or operation of a control over compliance does not allow management or employees, in the normal course of performing their assigned functions, to prevent, or detect and correct, noncompliance with a type of compliance requirement of a state program on a timely basis. A *material weakness in internal control over compliance* is a deficiency, or combination of deficiencies, in internal control over compliance, such that there is a reasonable possibility that material noncompliance with a type of compliance requirement of a state program will not be prevented, or detected and corrected, on a timely basis.

Our consideration of internal control over compliance was for the limited purpose described in the first paragraph of this section and would not necessarily identify all deficiencies in internal control over compliance that might be deficiencies, significant deficiencies, or material weaknesses. We did not identify any deficiencies in internal control over compliance that we consider to be material weaknesses, as defined above.

This report is intended solely for the information and use of the City of Kotzebue's management, Honorable Mayor and City Council, and the State of Alaska, and is not intended to be and should not be used by anyone other than these specified parties.

Mikunda, Cottrell & Co.

Anchorage, Alaska
November 19, 2010

CITY OF KOTZEBUE, ALASKA

Schedule of Findings and Questioned Costs

Year Ended June 30, 2010

I. Summary of Auditor's Results

Financial Statements

Type of auditor's report issued — Unqualified

Internal control over financial reporting:

- Material weakness(es) identified? ____ yes _X_ no
- Significant deficiency(ies) identified that are not considered to be material weakness(es)? _X_ yes ____ no
- Noncompliance material to financial statements noted? ____ yes _X_ no

Federal Financial Assistance

Internal control over major programs:

- Material weakness(es) identified? ____ yes _X_ no
- Significant deficiency(ies) identified that are not considered to be material weakness(es)? ____ yes _X_ none reported

Type of auditor's report issued on compliance for major programs? — Unqualified

Any audit findings disclosed that are required to be reported in accordance with section 510(a) of Circular A-133? ____ yes _X_ no

Identification of major programs:

Agency	CFDA Number	Name of Federal Program or Cluster
Department of Agriculture	10.760	Water and Waste Disposal Systems For Rural Communities

Dollar threshold used to distinguish between Type A and Type B programs: $300,000

Auditee qualified as low-risk auditee? ____ yes _X_ no

State Financial Assistance

Internal control over major programs:

- Material weakness(es) identified? ____ yes _X_ no
- Significant deficiency(ies) identified that are not considered to be material weakness(es)? ____ yes _X_ none reported

Summary of Auditor's Results, continued

State Financial Assistance, continued

Type of auditor's report issued on compliance for major programs?	Unqualified
Dollar threshold used to distinguish a state major program?	$75,000

II. Financial Statement Findings

Finding 10-01 **Internal Control Over Utility Billing – Significant Deficiency**

Criteria: Appropriate reviews and approvals of utility billings is an important step in the revenue recording process that helps ensure customers are appropriately billed and revenue recognized in the proper period.

Condition: During our auditing procedures to obtain an understanding of the City's revenue transaction cycle, we observed that there is no process for review and approval of the utility billing report prepared by the Accounts Receivable Technician before bills are sent to customers and revenue and accounts receivable is recorded in the general ledger. In addition, during our auditing procedures over utility customer accounts receivable, we noted billing errors had been made during the year, which went undetected until the following year.

Context: During our utility customer receivable test work, we found that two sewer service billing samples out of the four tested were billed out at substantially less than what they should have been. After further inquiry, we were informed that the City had found and corrected errors during 2010 for billing errors totaling $101,316. The City had to send revised bills to 85 commercial customers. This error went undetected for several months starting in June, 2009.

Effect: An insufficient review process resulted in the City failing to detect these billing errors in a timely manner. Utility revenues were understated by an immaterial amount for the year. The errors were detected and corrected in the subsequent year. If undetected billing errors go undetected in the future, this could limit the amount of resources available to the City to provide sufficient services or cause City service users to pay more than their share of the services provided.

Financial Statement Findings, continued

Finding 10-01 **Internal Control Over Utility Billing – Significant Deficiency, continued**

Cause: Only one employee is currently responsible for utility billings. The City underwent a software conversion during fiscal year 2009 that could also have contributed to billing errors. Without a consistent review process, those errors went undetected.

Recommendation: In order to prevent or detect errors on utility billings, the Accounts Receivable Technician should print out a monthly utility billing edit report from the accounting system and have another accounting staff member review and cross check the report with the actual meter reading report from the Public Works department to ensure completeness of billings before utility billings are posted into the general ledger. Furthermore, in order to detect errors, an aging of accounts receivable should be printed every month and reviewed by the Finance Director for accuracy and reasonableness.

Views of responsible officials and planned corrective actions: Management concurs with the finding. See corrective action plan.

Finding 10-02 **Internal Control Over Accounting System Backups – Significant Deficiency**

Criteria: Backups and testing of recovery from backups on the accounting system is crucial to ensuring continuity of business operations. Key business data is at risk for loss through a multitude of situations, including a malfunction of the software application or a crisis that destroys equipment. Failure to consistently perform backups, store backups in an offsite location and/or in a fireproof container allows greater risk of material interruptions to business operations in the event of the loss of key business data.

Condition: During the course of our audit, we noted that the City did not consistently perform backups of the accounting system nor test the ability to recover information from the backups. This resulted in not being able to recover information in a timely manner from the accounting software crash that occurred during the process of updating the software to a newer version.

Context: Per inquiry with the Finance Director during the audit field work, there was data loss from an accounting system failure during the system upgrade by the vendor. While much of the information was subsequently recovered by the software provider, some data such as accrued leave hours earned and used by employee was not available during the audit fieldwork.

Financial Statement Findings, continued

Effect: Failure to consistently perform software backups and test recovery from backups allows greater risk of material interruptions to business operations in the event of the loss of key business data.

Cause: The City did not consistently ensure that there are backups of its accounting system nor test the ability to recover information from the backups.

Recommendation: We recommend that the City implement full backups of the accounting system weekly, and periodically perform testing of recovery from backups. In addition, we recommend that backups be stored at an offsite location.

Views of responsible officials and planned corrective actions: Management concurs with the finding. See corrective action plan.

III. Federal Award Findings and Questioned Costs

None noted.

IV. State Award Findings and Questioned Costs

None noted.

CITY OF KOTZEBUE, ALASKA

Summary Schedule of Prior Audit Findings

Year Ended June 30, 2010

Financial Statement Findings

Finding 09-01 **Internal Control Over Utility Billing – Significant Deficiency**

Condition: Sufficient controls were not maintained to enable the City of Kotzebue to process the utility billing.

Status: This finding continued into fiscal year 2010. See finding 10-01

Federal Award Findings and Questioned Costs

Finding 09-02 **Late Submission of the Reporting Package to the Federal Audit Clearinghouse (Reporting)- Significant deficiency**

Agency	CFDA Number	Name of Federal Program or Cluster
Department of Agriculture	10.760	Water and Waste Disposal Systems for Rural Communities

Condition: Sufficient controls were not maintained to enable the City of Kotzebue to submit the reporting package in a timely manner to the Federal Audit Clearinghouse.

Status: This finding was resolved.

State of Alaska

There were no prior year audit findings.

CITY OF KOTZEBUE
"Gateway to the Arctic"

P.O. Box 46
Kotzebue, Alaska 99752

City Hall
(907) 442-3401

Police Dept.
(907) 442-3351

Fire Dept.
(907) 442-3404

Public Works
(907) 442-3401

November 13, 2010

Mikunda Cottrell & Co., Inc.
3601 "C" Street, Suite 600
Anchorage, Alaska 99503

Re: FY10 Audit, Corrective Action Plan

To Whom It May Concern:

The City of Kotzebue's financial statements for the year ending June 30, 2010, illustrate noted deficiencies in both utility billing and the ability to provide internal control over accounting system backups. Both findings represent significant weaknesses in that they impair the accuracy and effectiveness of the City's financial report. To remedy these situations the City has planned the following systemic changes that are presently being instituted.

1.) The utility billing function is central to the City's sanitation and waste services by providing revenue for operation, maintenance and development. Internal controls that monitor the utility billing process promote both the accuracy and timeliness of billings. To ensure the City is issuing billing statements that are timely and correct, the City has implemented a review process whereby a monthly billing register along with an aging report is provided to the Finance Director for comparison with existing metered or calculated data. Upon written approval by the Finance Director, the Accounts Receivable staff will issue the billing statements with corrections, if necessary. A file containing authorized billing registers will be kept in the Accounts Payable office as a record of these approvals.

2.) The City of Kotzebue, working with its third-party IT provider, has implemented a plan whereby networking components have been purchased and are currently being installed in the off-site jail facility. This strategy, coupled with the purchase of ten data backup tapes, should not only allow for a daily offsite backup but also a weekly rotation of backup tapes to be kept in a secure location in the police department. As an additional layer of security, the Finance Department has also been saving a backup to one of its desktop computers on a weekly basis to use as an additional resource, if needed.

The oversight and control enacted and sustained through the above measures will provide stability and reduce the potential for systemic errors. While the City has been able to mitigate issues stemming from the above-noted deficiencies, their resolution will be paramount to ensure an effective accounting system.

Respectfully,

Rick A. Hohnbaum
City Manager