GENERAL NOTES

SCOPE OF WORK

THE SCOPE OF WORK INCLUDES CONSTRUCTING, FURNISHING, AND INSTALLING NEW FLOATING DOCKS WITH A PILE AND CHAIN ANCHOR SYSTEM, A SHEET PILE BULKHEAD, SAND BEACH AND SWIM AREA, LIGHTING IN THE UPLANDS, NAVIGATION LIGHTS ON THE SWAN LAKE AND KOTZEBUE SLOUGH BRIDGES, AND OTHER ITEMS.

APPLICABLE CODES AND STANDARDS

ALL FEDERAL STATE AND LOCAL CODES AND REGULATIONS PLUS THE FOLLOWING (LATEST VERSIONS) ARE PART OF THESE PLANS AND SPECIFICATIONS.

A. INTERNATIONAL BUILDING CODE
B. AWS D1.1 AND D1.2 STRUCTURAL WELDING CODE
C. ASTM STANDARDS AND SPECIFICATIONS

DESIGN CRITERIA

GENERAL
WIND: 145 MPH 3 SECOND GUST
SNOW LOAD: 60 PSF DISTRIBUTED

FLOAT SYSTEM
LIVE LOAD: 30 PSF DISTRIBUTED
POINT LOAD: 400 LB
VEHICLE LOAD: NONE - NOT DESIGNED FOR VEHICLES
ICE LOAD: NONE - NOT DESIGNED FOR ICE LOADS
UNLOADED FREEBOARD: 12" MIN, 18" MAX

TRANSITION RAMP
LIVE LOAD: 85 PSF DISTRIBUTED
VEHICLE LOAD: NONE - NOT DESIGNED FOR VEHICLES

HEAVY LOADOUT AREA
LIVE LOAD: 300 PSF DISTRIBUTED
VEHICLE LOAD: HS20

1

NOTES AND CONTRACT DOCUMENTS

THE NOTES PROVIDED ON THE DRAWINGS ARE INTENDED TO HIGHLIGHT CERTAIN REQUIREMENTS AS SPECIFIED IN THE CONTRACT DOCUMENTS AND SHOULD NOT BE RELIED ON SOLELY AS THE ENTIRE PROJECT REQUIREMENTS. IT IS THE CONTRACTOR'S RESPONSIBILITY TO BE FAMILIAR WITH ALL PARTS OF THE CONTRACT DOCUMENTS INCLUDING BUT NOT LIMITED TO THE CONTRACT, SPECIFICATIONS, DRAWINGS, AND SUPPLEMENTAL INFORMATION, SUCH THAT THEY ARE FAMILIAR WITH ALL DETAILS OF THE WORK. THE CONTRACTOR SHALL RESOLVE ANY CONFLICTS, DISCREPANCIES, OR MISUNDERSTANDINGS BEFORE THE START OF WORK.

EROSION CONTROL AND POLLUTION PREVENTION

THE CONTRACTOR SHALL BE RESPONSIBLE FOR PREPARING AN EROSION CONTROL AND POLLUTION PREVENTION PLAN AND SUBMITTING IT TO THE ENGINEER. THE PLAN SHALL INCLUDE DETAILS FOR THE PREVENTION FOR SPILLS, CONTAINMENT, CLEANUP, AND DISPOSAL OF HAZARDOUS WASTE MATERIAL PROTECTION FROM EROSION AND PREVENTION OF SILT INTRUSION INTO LOCAL WATER BODIES AND OTHER ITEMS AS OUTLINED IN THE SPECIFICATIONS. A COPY OF THIS PLAN SHALL BE KEPT ONSITE DURING CONSTRUCTION.

DRAWING SCALES

DRAWING SCALES ARE PROVIDED ON SOME DRAWING FOR CONVENIENCE, SCALES SHOWN ARE FOR FULL SIZED DRAWINGS, REDUCED SCALED DRAWINGS SHALL BE INTERPRETED ACCORDINGLY. DIMENSIONS AND NOTES SHALL TAKE PRECEDENCE OVER SCALES.

SURVEY AND CONTROL

A PROJECT SPECIFIC SURVEY WAS NOT COMPLETED FOR THIS WORK. CONTROL AND CONTOURS ARE BASED ON THE PUBLIC RECORD SURVEY CONDUCTED BY THE CORPS OF ENGINEERS DATED 2010. A COPY OF THIS SURVEY IS INCLUDED IN THE REFERENCE MATERIAL IN THE PROJECT SPECIFICATIONS AND IS AVAILABLE FROM THE ENGINEER. HORIZONTAL CONTROL IS ALASKA STATE PLANE, ZONE 7, NAD 83. VERTICAL CONTROL IS BASED ON MEAN LOW LOW WATER = ELEVATION 0.0.

THE CONTRACTOR SHALL PROVIDE CONSTRUCTION SURVEYING FOR THIS PROJECT. AN AS-BUILT SURVEY OF THE INSTALLED LOCATION OF THE DRIVEN PIPE PILE ANCHORS FOR THE FLOAT RESTRAINT SYSTEM SHALL BE PROVIDED.

FILL MATERIALS

BEACH SAND SHALL BE MATERIAL IMPORTED AND PLACED AT THE SITE AND SHALL HAVE NO LUMPS, ORGANIC MATTER, OR OTHER DELETERIOUS MATTER AND MEET THE FOLLOWING GRADATION*

SIEVE	PERCENT PASSING BY WEIGHT
3/8"	100
# 4	80-100
# 10	50-80
# 40	20-50
# 100	0-20
# 200	0-8

LEVELING COURSE SHALL BE FREE OF ANY DELETERIOUS MATERIAL AND SHALL MEET THE FOLLOWING GRADATION:

SIEVE	PERCENT PASSING BY WEIGHT
1-1/2"	100
3/4"	70-100
#4	35-65
#8	20-50
#50	8-30
#200	0-8

1

EXCAVATED MATERIAL MUST BE DE-WATERED BEFORE IT WILL BE SUITABLE FOR PLACEMENT AS BORROW. BERMING OR OTHER MEANS TO TEMPORARILY DEWATER THE SITE IN THESE AREAS SHALL BE PROVIDED PRIOR TO PLACING FILL BELOW THE NORMAL WATERLINE.

LEVELING COURSE SHALL BE PLACED AND COMPACTED TO THE LINES AND GRADES INDICATED ON THE PLANS. THE MATERIALS SHALL BE PLACED AND SPREAD UNIFORMLY IN LAYERS NOT EXCEEDING 12 INCHES IN IN LOOSE THICKNESS. WATER OR AERATE TO ENSURE EACH LAYER CAN BE COMPACTED TO FORM A DENSE MASS FREE OF PUMPING. EACH LAYER SHALL BE COMPACTED TO NOT LESS THAN 95% IN ACCORDANCE WITH ASTM D698.

1

GALVANIZED COATINGS

ALL STEEL MEMBERS INCLUDING FABRICATIONS AND HARDWARE SHALL BE HOT DIP GALVANIZED IN ACCORDANCE WITH ASTM A 123 AND ASTM A 153. ITEMS REQUIRING FABRICATION SHALL BE GALVANIZED AFTER FABRICATION.

DAMAGED AREAS OF COATING AND AREAS GROUND FREE OF COATING FOR WELDING SHALL BE REPAIRED WITH SPRAY METALIZING IN ACCORDANCE WITH THE SPECIFICATIONS.

1

WELDING - STEEL

WELDERS SHALL BE QUALIFIED FOR THE PARTICULAR PROCESS AND PROCEDURE THAT THE WELDER WILL PERFORM IN ACCORDANCE WITH AWS D1.1 AND D1.2.

GLUE LAMINATED TIMBER

DOUGLAS FIR, GRADE 24F-V8, DF/DF IN ACCORDANCE WITH AITC 117 SPECIFICATIONS AND CONFORMING TO THE LATEST STANDARD GRADING RULES FOR WEST COAST LUMBER PUBLISHED BY THE WCLIB. GLUE-LAMINATED MEMBERS SHALL BE PRODUCED IN CONFORMANCE WITH THE REQUIREMENTS OF U.S. COMMERCIAL STANDARD PS 56-73. LAMINATING ADHESIVES SHALL BE WATERPROOF. APPEARANCE OF GLUED-LAMINATED MEMBERS SHALL BE INDUSTRIAL GRADE OR BETTER. INSPECTION SHALL BE IN ACCORDANCE WITH AMERICAN INSTITUTE OF TIMBER CONSTRUCTION, AITC 200 INSPECTION MANUAL.

SAWN TIMBER

DOUG FIR, LARCH, GRADE NO. 1 OR BETTER, NO LOOSE KNOTS IN ACCORDANCE WITH WCLIB GRADING RULES NO. 17. SURFACED S4S OR AS OTHERWISE NOTED ON THE PLANS. COMMERCIAL INSPECTION WITH CERTIFICATION IS REQUIRED, MILL CERTIFICATES NOT ACCEPTABLE. NO EXPRESS GUARANTEE ATTACHED TO CERTIFICATE IF SUBSEQUENT INSPECTION REVEALS UNACCEPTABLE MATERIAL.

TIMBER DECKING

DOUG FIR LARCH, NO. 1 OR BETTER PER WCLIB GRADING RULES. SURFACING SHALL BE S1S2E, CHAMFERED AND MILLED AS NOTED ON THE PLANS. TIMBER DECKING MATERIALS SHALL BE OF THE HIGHEST QUALITY AND FREE FROM SPLITS, WARPS, CRACKS, EXCESSIVE KNOTS AND OTHER DEFECTS. COMMERCIAL INSPECTION WITH CERTIFICATION IS REQUIRED, MILL CERTIFICATES NOT ACCEPTABLE. NO EXPRESS GUARANTEE ATTACHED TO CERTIFICATE IF SUBSEQUENT INSPECTION REVEALS UNACCEPTABLE MATERIAL.

PLYWOOD

THE PLYWOOD DIAPHRAGM PLATE SHALL BE GRADE C-C EXTERIOR, GROUP 1 SPECIES, APA CUSTOM PRODUCT V-611, USING VENEER GRADED FOR SEVERE MOISTURE SERVICE LAID WITH EXTERIOR-RATED ADHESIVES. PLATES SHALL BEAR THE GRADE MARK OF THE AMERICAN PLYWOOD ASSOCIATION, CERTIFYING CONFORMANCE TO U.S. PRODUCT STANDARD PS 1-83 AND MARKED "APA C-C EXT".

PLYWOOD SHALL BE SUPPLIED IN SIZES SUCH THAT ALL BLOCK EDGES FALL ON FRAMING MEMBERS SUCH AS STRINGERS OR SILLS.

PLASTIC LUMBER

HIGH-DENSITY POLYETHYLENE (HDPE) LUMBER WILL BE USED FOR RUBBOARDS. HDPE SHALL BE A PURIFIED HIGH-DENSITY HDPE MATERIAL MADE FROM 100% RECYCLED PLASTIC, IN ACCORDANCE WITH ASTM D-6662. THE MATERIAL SHALL BE OF UNIFORM COLOR, SHALL BE COLOR STABILIZED, AND SHALL BE RESISTANT TO ULTRA-VIOLET DETERIORATION, MECHANICAL ABRASION, CHEMICAL ATTACK, DETERGENTS, AND ANIMALS. THE PLASTIC LUMBER MATERIAL SHALL BE PROCURED IN 8-FOOT LENGTHS, MINIMUM. THE MATERIAL SHALL ALSO BE SUITABLE FOR LONG-TERM EXTERIOR EXPOSURE. COLOR SHALL MATCH THE FURNISHED WOOD FLOAT MATERIAL OR AS APPROVED BY THE OWNER.

TIMBER PRESERVATIVE TREATMENT

TIMBER MEMBERS SHALL BE PRESSURE TREATED WITH PRESERVATIVE AS OUTLINED BELOW. ALL TIMBERS SHALL BE CUT TO LENGTH, DRILLED AND DAPPED PRIOR TO TREATMENT. ALL PRESSURE TREATMENT PROCESSES SHALL BE PERFORMED IN ACCORDANCE WITH BEST MANAGEMENT PRACTICES FOR THE SPECIFIED TREATMENT TYPE AS PUBLISHED BY THE WESTERN WOOD PRESERVERS INSTITUTE (WWPA), LATEST EDITION.

GLUE LAMINATED OR SAWN BULLRAILS

PRESSURE TREAT WITH ACZA (AMMONIACAL COPPER ZINC ARSENATE) TO 0.6 POUNDS PER CUBIC FOOT (PCF) NET DRY SALT RETENTION IN ACCORDANCE WITH AWPA USE CATEGORY 4B COMMODITY SPECIFICATION F.

GLUE LAMINATED STRINGERS

FOR GLUE LAMINATED STRINGERS BELOW THE DECKING TREAT WITH CREOSOTE IN ACCORDANCE WITH AWPA USE CATEGORY 5A COMMODITY SPECIFICATION F, PROVIDE MINIMUM 12 PCF.

PLYWOOD

SHALL BE PRESERVATIVE TREATED IN ACCORDANCE WITH AWPA U1-07 COMMODITY SPECIFICATION SECTION F, USE CATEGORY 4B AND AWPB SPECIFICATION LP22 WITH CCA OR ACZA TO 0.6 PCF.

SAWN TIMBERS INCLUDING DECKING.

SHALL BE PRESSURE TREATED WITH ACZA TO NOT LESS THAN 0.6 PCF NET DRY SALT RETENTION IN ACCORDANCE WITH AWPA U1-2007 USE CATEGORY 4B (SALT SPLASH ZONE).

SAWN TIMBERS BELOW DECKING

PRESSURE TREAT WITH CREOSOTE PRESERVATIVE, MINIMUM NET RETENTION OF 20 PCF IN ACCORDANCE WITH AWPA U1-2007 USE CATEGORY 5A FOR (MARINE USE).

SAWN TIMBER, PLYWOOD, AND GLUE-LAMINATED TIMBER SHALL BE CUT TO LENGTH, DRILLED, DAPPED, AND CHAMFERED PRIOR TO PRESSURE TREATMENT.

TREATED TIMBER SHALL BE HANDLED CAREFULLY WITHOUT DROPPING, BREAKING OF OUTER FIBERS, OR BRUISING OR PENETRATING THE SURFACE WITH TOOLS.

COATINGS

PAINT SHALL BE A MARINE GRADE EPOXY. COLOR TO BE APPROVED BY THE ENGINEER IF NOT INDICATED ON THE PLANS.

1

STATE OF ALASKA 49TH
Elizabeth Greer
No. C 13351
REGISTERED PROFESSIONAL ENGINEER

URS
700 G STREET, SUITE 500
ANCHORAGE, AK 99501
TEL: (907) 279-0543
FAX: (907) 276-7679

NO.	BY	DATE	REVISIONS DESCRIPTION
1	BG	1/23/2015	REVISE NOTES

CITY OF KOTZEBUE
SWAN LAKE HARBOR FACILITY IMPROVEMENTS
KOTZEBUE, AK
GENERAL NOTES (1 OF 2)

PROJECT NO	26221281
DATE	01/27/2015
DESIGNED	JD/EG
DRAWN BY	EK/BG
CHECKED BY	EG
SHEET	G1.2
PAGE	3 OF 31

REV. 3/2010

O:\PROJECTS\26221281 SWAN LAKE PHASE I IMPROVEMENTS\401 WORKING DRAWINGS\01_G1.3_GENERAL NOTES_REV1.DWG Revised 1/27/2015 4:32:33 PM

GENERAL NOTES (CONTINUED)

FIELD/REPAIR TREATMENT

ALL NICKS, CUTS, ABRASIONS AND FIELD DRILLED HOLES AND SAW CUTS OCCURRING AFTER PRESSURE TREATMENT SHALL BE CAREFULLY TRIMMED AND THOROUGHLY SATURATED IN THE FIELD.

CREOSOTE

BRUSH COATED WITH TWO APPLICATIONS OF A MIXTURE OF 60 PERCENT COPPER NAPTHENATE AND 40 PERCENT ROOFING PITCH OR SHALL BE BRUSH-COATED WITH AT LEAST THREE APPLICATIONS OF HOT CREOSOTE OIL (BETWEEN 150 ° F AND 200 ° F) AND COVERED WITH HOT ROOFING PITCH.

AZCA

IF ACZA IS THE BASIC TREATMENT, A COPPER NAPHTHENATE SOLUTION OF NOT LESS THAN 2% COPPER METAL SHALL BE USED IN THREE APPLICATIONS IN LIEU OF THE CREOSOTE AND PITCH. ANY UNFILLED HOLES BORED AFTER TREATMENT, AFTER BEING TREATED AS OUTLINED ABOVE, SHALL BE PLUGGED WITH CREOSOTE OR COPPER NAPHTHENATE SATURATED PLUGS.

FASTENERS AND CONNECTION HARDWARE

ALL TIMBER CONNECTION BOLTS AND LAGS SHALL BE ASTM A307 GRADE C MIN. ALL BOLTS, NUTS AND WASHERS SHALL BE HOT DIPPED GALVANIZED IN ACCORDANCE WITH ASTM A153. ALL BOLTS IN CONTACT WITH WOOD MEMBERS SHALL HAVE ECONOMY HEADS AND/OR MALLEABLE IRON WASHERS UNLESS OTHERWISE NOTED. HINGE CONNECTION BOLTS SHALL BE ASTM A325.

ALL NAILS SHALL BE HOT DIP GALVANIZED AFTER BEING FORMED. NAILS ARE NOT TO BE PRODUCED FROM PRE-GALVANIZED WIRE.

PILOT HOLES FOR NAILS SHALL BE PRE DRILLED AT ALL LOCATIONS WHERE EDGE OR END SPLITTING COULD OCCUR.

PILOT HOLES FOR LAG SCREWS SHALL BE USED AT ALL LOCATIONS.

POLYSTYRENE FLOATATION

FLOATATION PLANKS SHALL BE CONSTRUCTED FROM CLOSED CELL EXPANDED POLYSTYRENE AS PER ASTM D-1621. THE POLYSTYRENE SHALL HAVE A MINIMUM DENSITY OF 0.9 PCF AND A MAXIMUM WATER ABSORPTION OF 4% BY VOLUME IN ACCORDANCE WITH ASTM C-272.

EACH PLANK SHALL BE CUT, DRILLED AND NOTCHED TO THE DIMENSIONS SHOWN. USE A HOT WIRE OR OTHER SUITABLE METHOD TO PRODUCE CLEAN AND PRECISE CUTS. AFTER THE PLANKS ARE CUT TO THE PRECISE SHAPE THEY SHALL BE COATED WITH A MINIMUM OF 50 MILS OF HEAVY DUTY POLYUREA OR POLYURETHANE EPOXY.

FLOAT ASSEMBLY NOTES

PRE-DRILL DECKING AS REQUIRED TO PREVENT SPLITTING. SPLIT DECKING WILL BE REJECTED. THE PLYWOOD DIAPHRAGM PANELS SHALL BE INSTALLED SO THAT ALL EDGES LAND ON FRAMING MEMBERS (FULLY BLOCKED) NAIL AT ALL ENDS, EDGES, AND ALL FRAMING MEMBERS IN THE FIELD OF THE SHEET AS SHOWN. FLOAT FABRICATION SEQUENCE SHALL INCLUDE PROVISIONS TO FULLY NAIL PLYWOOD TO STRINGERS AND SILLS.

CONCRETE

SUBMIT A CONCRETE MIX DESIGN TO THE ENGINEER FOR APPROVAL. THE CONCRETE MIX SHALL INCLUDE THE FOLLOWING MINIMUM PROVISIONS:

1. MINIMUM 28 DAY COMPRESSIVE STRENGTH 5,000 PSI
2. MAXIMUM AGGREGATE SIZE ¾ INCH
3. MINIMUM AIR ENTRAINMENT 6%
4. MAXIMUM WATER TO CEMENT RATIO 0.4

HANDLE ALL PREFABRICATED CONCRETE ITEMS WITH CARE. LIFT AND PLACE USING SPREADER BARS, MULTIPLE SLINGS AND OTHER MEANS TO ENSURE THAT THERE IS NO DAMAGE. STORE AND STACK ON DUNAGE WITH PROPER SUPPORT.

ALL STEEL REINFORCING, STEEL LINKAGE AND STEEL LIFTING MEMBERS CAST INTO THE CONCRETE SHALL BE HOT DIP GALVANIZED.

ALUMINUM

6061 T6 U.O.N.

NON-SLIP COATING: SLIP-NOT GRADE 2.

PILES AND PILE DRIVING

PILES - ASTM A53 GRADE B, ASTM A500 GRADE B OR B/C, OR ASTM A252 DUAL CERTIFIED TO MEET ASTM A500 GRADE B (OR B/C). LONGITUDINAL OR SPIRAL SEAM WELD IS ACCEPTABLE. SHOP SPLICE ONLY USING FULL PENETRATION WELD CONDUCTED BY CERTIFIED WELDERS. LENGTH OF LONGITUDINAL SECTIONS BTWN SPLICES SHALL NOT BE LESS THAN 10 FEET. HOT DIP GALVANIZE AFTER FABRICATION.

PILE DRIVING - SUBMIT A PILE DRIVING PLAN FOR APPROVAL. INCLUDE THE FOLLOWING ITEMS AT A MINIMUM.

1. A DETAILED DESCRIPTION OF THE PLANNED INSTALLATION METHOD INCLUDING TYPES OF EQUIPMENT AND METHODOLOGY.
2. A DESCRIPTION OF THE TEMPLATE AND OTHER METHODS USED TO ENSURE PROPER LOCATION AND ALIGNMENT OF THE PILING.
3. A SCHEDULE OF ACTIVITIES.
4. AN INSTALLATION MONITORING PLAN INCLUDING A MEANS TO LOG THE PILING.
5. CRITERIA TO ACCEPT OR REJECT PILING.
6. MEANS AND METHODS TO DEAL WITH OBSTRUCTIONS.
7. THE PILE HAMMER SHALL HAVE AN ENERGY RATING OF BETWEEN 20 AND 90 KIP FEET. A VIBRATORY HAMMER MAY BE USED IF IT CAN BE DEMONSTRATED TO HAVE NO ADVERSE EFFECTS ON NEARBY SLOPES. IF A VIBRATORY HAMMER HAS AN ADVERSE EFFECT ON NEARBY SLOPES THE CONTRACTOR IS RESPONSIBLE TO REPAIR AND RESTORE THE SLOPE AND TO SWITCH TO A SUITABLE IMPACT HAMMER AT NO COST TO THE OWNER.
8. TOP OF PILES SHALL BE WITHIN 2" RADIUS OF DESIGN HORIZONTAL AND VERTICAL LOCATION.
9. SURVEY PILE TOPS AFTER DRIVING.

CHAIN

ALIGN CHAIN CONNECTION PLATES TO BE WITHIN 5 DEGREES OF DESIGN CHAIN ALIGNMENT, SEE DETAIL E/S1.3.

GALVANIZED STUD LINK CHAIN, GRADE 2, WITH ABS CERTIFICATES. (PROOF LOAD = 23,745 LBS, BREAKING LOAD = 33,220 LBS.)

E.O.R. WILL USE SUBMITTED PILE TOP SURVEY TO DETERMINE FINAL CHAIN CUTTING LENGTHS. DO NOT CUT CHAIN TO LENGTH UNTIL E.O.R. PROVIDES FINAL CUTTING LENGTHS.

CUT CHAIN TO LENGTH WITH ABRASIVE DISC CUT-OFF SAW - DO NOT USE TORCH TO BURN THRU CHAIN. HOLD CHAIN IN VISE WHILE CUTTING. DO NOT DAMAGE GALVANIZING ON ADJACENT LINK.

SHACKLES

HOT DIP GALVANIZED BOLT-TYPE CHAIN SHACKLES WITH STAINLESS STEEL COTTER PIN. ULTIMATE STRENGTH TO EQUAL OR EXCEED CHAIN BREAKING LOAD. PROJECT DIMENSIONS ARE BASED ON CROSBY G-2150 5/8" SHACKLE. SUBMIT ABS CERTIFICATES.

UHMW

ULTRA HIGH MOLECULAR WEIGHT POLYETHYLENE (UHMW PE) SHALL BE PRODUCED IN ACCORDANCE WITH ASTM 4020-81. THE MATERIAL SHALL BE A MIXTURE OF VIRGIN UHMW PE RESIN (CONFORMING TO ASTM D-4020) AND RECYCLED UHMW CHIPS (20% MAX BY WEIGHT). THE UHMW MIX SHALL BE CHEMICALLY CROSS-LINKED ULTRA VIOLET LIGHT STABILIZED AND SUITABLE FOR LONG TERM EXTERIOR EXPOSURE. UHMW PE USED FOR PILE COLLARS AND FLOAT MODULE SKIDS SHALL BE BLACK.

UHMW PE SKIDS AND PILE COLLAR LINING SHALL BE BENT TO THE ROUNDED GEOMETRY SHOWN ON THE DRAWINGS USING HEAT TO BRING THE MATERIAL TO A PLASTIC CONDITION. BENDING BY CUTTING KERFS SHALL NOT BE ALLOWED.

RIGID INSULATION BOARD

THE INSULATION BOARD SHALL HAVE A MINIMUM FULL BOARD SIZE OF TWO FOOT BY EIGHT FOOT, HAVE THE SPECIFIED R-VALUE OR BETTER, AND SHALL CONFORM TO THE REQUIREMENTS OF AASHTO M230, EXCEPT THAT EXTRUSION IS NOT REQUIRED. R-VALUE OF INSULATION SHALL BE BASED ON MANUFACTURER'S WARRANTED R-VALUE. THE INSULATION BOARD SHALL BE RIGID, HOMOGENEOUS, AND CONFORM TO THE TESTS LISTED IN THE SPECIFICATIONS.

CONTRACTOR SHALL INSTALL THE INSULATION BOARD WITH STAGGERED JOINTS. LAYERING OF INSULATION TO OBTAIN THE SPECIFIED R-VALUE IS ALLOWED AS LONG AS JOINTS ARE OVERLAPPED AT LEAST ONE FOOT.

OPERATIONS AND MAINTENANCE

SEASONAL USE

THE FLOATS ARE NOT INTENDED FOR USE IN ICE CONDITIONS AND MUST BE REMOVED FROM THE HARBOR IN THE WINTER. EVERY FALL PRIOR TO FREEZE-UP REMOVE, AND CAREFULLY HANDLE AND STOCKPILE FLOATS IN A SECURE UPLAND LOCATION, UNTIL REINSTALLATION IN THE SPRING. FLOATS HAVE BEEN DESIGNED FOR REMOVAL AND "TOWING" ACROSS THE GRAVEL UPLANDS USING THE CITY'S LOADER, AND ANCHOR CHAINS HAVE BEEN DESIGNED FOR REATTACHMENT TO FLOAT MODULES FROM A SKIFF, CHAINS TO BE MARKED USING BUOYS OR FLOATING ROPE. LEAVING FLOATS IN SWAN LAKE OF THE WINTER MONTHS COULD DRAMATICALLY SHORTEN THE LIFE OF THE SYSTEM.

THE FLOAT SYSTEM IS DESIGNED FOR PEDESTRIAN LOADS ONLY. A HEAVY LOAD DOCK (BULKHEAD) HAS BEEN DESIGNED FOR DRIVE-UP LOADING AND UNLOADING OF VESSELS. THE FLOATS HAVE NOT BEEN DESIGNED FOR STABILITY OR BUOYANCY UNDER VEHICULAR LOADS. FOUR-WHEELER OR OTHER VEHICULAR TRAFFIC SHOULD NOT BE PERMITTED ON THE FLOATS.

FLOAT MODULE MOVING, STACKING AND STORAGE

FLOATS MAY BE SKIDDED ON SMOOTH EVEN GROUND. PREPARE A SUITABLE PATHWAY TO OR FROM THE STORAGE AREA PRIOR TO MOVING THE FLOATS. THIS MAY REQUIRE GRADING THE SURFACE. ATTACH A TOWING BRIDLE TO THE SHACKLES ON THE CHAIN PLATE AT THE END OF THE MODULE. PULL AND SKID IN THE DIRECTION OF THE LONG AXIS OF THE FLOAT AND SKIDS. DO NOT DRAG OR PUSH THE FLOAT SIDEWAYS. DO NOT DRAG THE FLOAT OVER ROUGH OR UNEVEN GROUND.

FLOATS MAY BE LIFTED USING A 4 POINT BASKET SLING OR WITH A LARGE FORKLIFT. IF A FORKLIFT IS USED ENSURE THAT THE FORKS ARE COMPLETELY UNDER THE ENTIRE MODULE, CENTERED IN THE GAPS IN THE SKIDS, AND EVENLY BEARING ON THE SIDE STRINGERS. TAKE CARE WHEN INSERTING THE FORKS TO ENSURE THE FORKS DO NOT DAMAGE THE SKIDS OR THE PLYWOOD. DRIVE THE FORKLIFT SLOWLY WITH THE FLOAT AND DO NOT BOUNCE THE MODULES. THE BASKET SLING REQUIRES 2 SPREADER BARS AND 2 NYLON STRAPS. DO NOT USE LINE OR WIRE ROPE TO LIFT THE FLOATS. DO NOT LIFT THE FLOATS WITHOUT SPREADER BARS.

STORE FLOATS ON LEVEL GROUND, WITH UNIFORM BEARING ON THE SKIDS. STACK NO MORE THAN THREE UNITS HIGH. PROVIDE 6X6 (OR LARGER) DUNNAGE UNDER THE SIDE STRINGERS ONLY AT APPROXIMATELY THREE FEET ON-CENTER THROUGHOUT THE LENGTH OF THE BOTTOM MODULE - DO NOT PLACE DUNNAGE UNDER CENTER STRINGER.

INSPECT SKID SHOE WHERE IN CONTACT WITH FLOAT LANDING PAD. REPLACE AS REQUIRED WITH SUPPLIED REPLACEMENT PIECES AS REQUIRED. 1

CHAINS

THE ANCHOR CHAINS MUST BE CONNECTED AS SHOWN IN THE DRAWINGS. THIS INCLUDES USING THE SPECIFIED LENGTHS AND FITTINGS SHOWN. THE SAFETY CHAINS AND CHAIN PLATE MUST BE INSTALLED AS SHOWN. USING NON SPECIFIED LENGTHS OF CHAIN, OTHER FITTINGS, OR NOT USING THE SAFETY CHAINS AND PLATES WILL RESULT IN A FLOAT THAT IS NOT STABLE IN ADVERSE WEATHER CONDITIONS.

THE ANCHOR CHAINS AND FITTINGS INCLUDING SHACKLES WILL WEAR OVER TIME AND MUST BE PERIODICALLY INSPECTED AND REPLACED. FIVE YEARS AFTER INSTALLATION REMOVE ALL CHAINS AND FITTINGS, INSPECT FOR WEAR, REPLACE EXCESSIVELY WORN COMPONENTS AND SWAP CHAIN END-FOR-END. AFTER 10 YEARS IT IS RECOMMENDED TO REPLACE ALL CHAIN AND FITTINGS.

THE ANCHOR CHAINS WILL BE RELEASED FROM THE FLOATS IN THE FALL EACH YEAR WHEN THE FLOATS ARE REMOVED FOR THE WINTER AND RETRIEVED IN THE SPRING WHEN THEY ARE REINSTALLED. IT IS RECOMMENDED THAT A SHORT SECTION OF ½ INCH DIAMETER POLYPROPYLENE LINE BE ATTACHED TO THE END OF EACH CHAIN IN THE PAIR FOR EACH ANCHORED FLOAT MODULE. THIS LINE WILL THEN FORM A SHORT FLOATING LOOP CONNECTING THE 2 CHAIN ENDS. THE LENGTH OF THE LINE SHOULD BE SET TO KEEP THE FLOATING LOOP GENERALLY UNDERWATER BUT VISIBLE FOR EASE OF RETRIEVAL WITH A BOAT HOOK OR SIMILAR DEVICE IN THE SPRING. THE CHAINS MUST BE CROSSED AS SHOWN IN THE DRAWINGS WHEN ATTACHED.

THE CHAIN ANCHOR SYSTEM HAS BEEN DESIGNED TO PERMIT HARBOR OPERATIONS (I.E., BERTHING AND MOORING OF VESSELS; PEDESTRIAN ACCESS ALONG THE FLOATS) DURING NORMAL WIND AND WATER LEVELS, AND TO PROVIDE MOORAGE DURING HISTORICAL EXTREME WINDS AND WATER LEVELS. FLOATS MAY ROTATE AND LIST UNDER SEVERE WINDS AND CHAIN CLEARANCE TO LOWER UNITS OF MOORED VESSELS MAY BE LIMITED DURING EXTREME HIGH OR LOW WATER LEVELS. CAUTION MUST BE EXERCISED WHEN ENTERING OR LEAVING THE HARBOR DURING PERIODS OF HIGH OR LOW WATER, AND PEDESTRIAN TRAFFIC SHOULD BE PROHIBITED UNDER EXTREME WIND CONDITIONS.

MISCELLANEOUS 1

THE HINGE PINS AND RUBBER BUSHINGS FOR THE FLOAT MODULE CONNECTIONS WILL WEAR OVER TIME AND MUST BE PERIODICALLY INSPECTED AND REPLACED. INSPECT THE HINGE PINS AND RUBBER BUSHINGS EACH YEAR WHEN THE FLOATS ARE REMOVED FOR THE WINTER. REPLACE ALL WORN, CRACKED, TORN, OR DEFORMED COMPONENTS.

THE TRANSITION RAMP IS DESIGNED TO FUNCTION IN NORMAL FLOAT OPERATING CONDITIONS. AT WATER LEVELS ABOVE +2', THE END OF THE RAMP MAY BECOME SUBMERGED, MAKING ACCESS DIFFICULT. ADDITIONALLY, HIGH WINDS BLOWING THE FLOATS AWAY FROM SHORE WILL HAVE A SIMILAR EFFECT. 1

STATE OF ALASKA 49TH Elizabeth Greer No. C 13351 REGISTERED PROFESSIONAL ENGINEER

URS
700 G STREET, SUITE 500
ANCHORAGE, AK 99501
TEL: (907) 279-0543
FAX: (907) 276-7679

REVISIONS

NO.	BY	DATE	DESCRIPTION
1	BG	1/23/2015	REVISE MISCELLANEOUS NOTES

CITY OF KOTZEBUE
SWAN LAKE HARBOR FACILITY IMPROVEMENTS
KOTZEBUE, AK
GENERAL NOTES (2 OF 2)

PROJECT NO	26221281
DATE	01/27/2015
DESIGNED	JD/EG
DRAWN BY	EK/BG
CHECKED BY	EG
SHEET	G1.3
PAGE	4 OF 31

REV. 3/2010

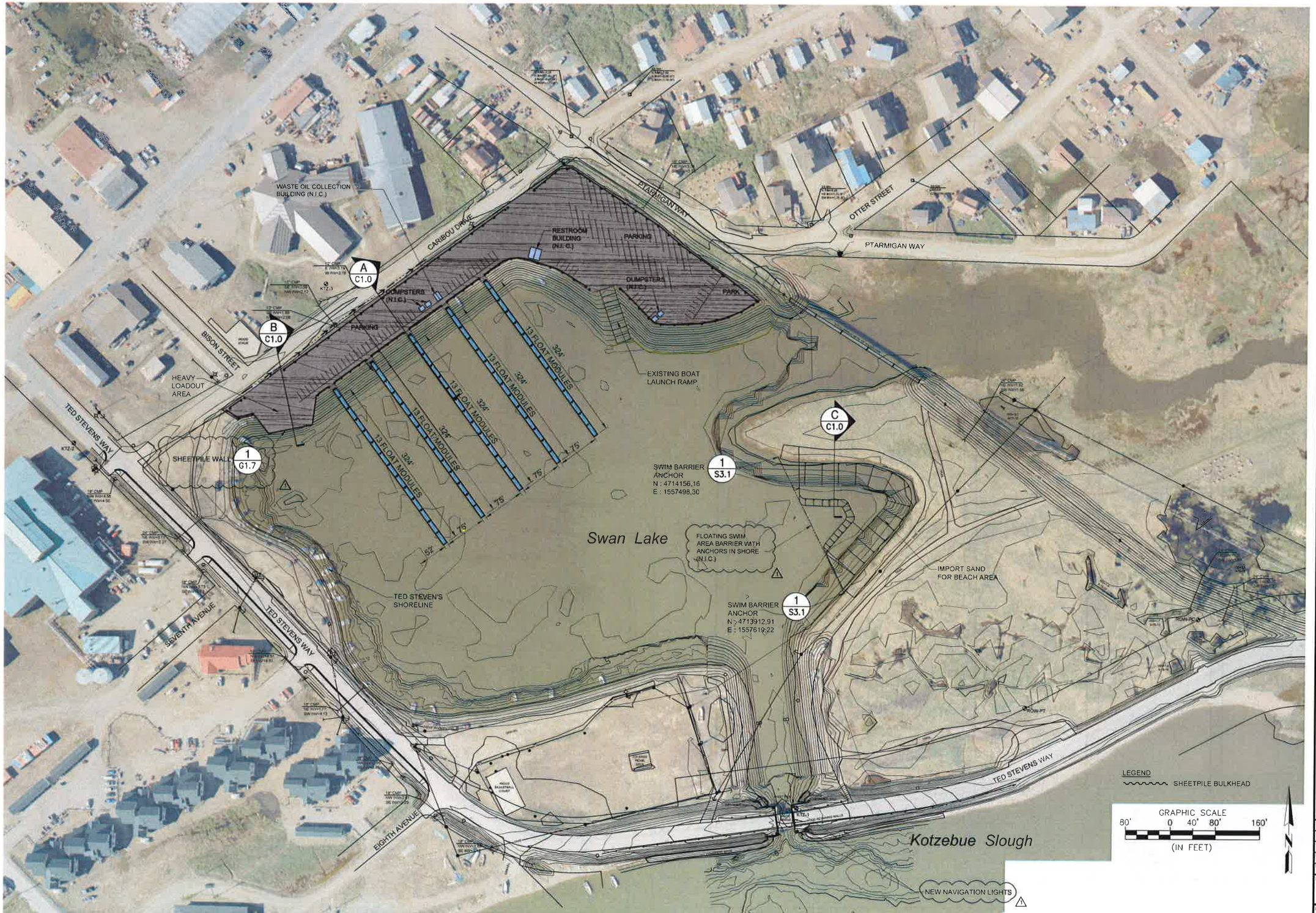

STATE OF ALASKA 49TH
Elizabeth Greer
No. C 13351
REGISTERED PROFESSIONAL ENGINEER

URS
700 G STREET, SUITE 500
ANCHORAGE, AK 99501
TEL: (907) 279-0543
FAX: (907) 276-7679

CITY OF KOTZEBUE

REVISIONS

NO.	BY	DATE	DESCRIPTION
1	BG	1/22/2015	REVISE CALL OUT NOTES

CITY OF KOTZEBUE

SWAN LAKE HARBOR FACILITY IMPROVEMENTS

KOTZEBUE, AK

PROPOSED IMPROVEMENTS

PROJECT No.	26221281
DATE	01/27/2015
DESIGNED	JD/EG
DRAWN BY	EK/BG
CHECKED BY	EG
SHEET	G1.5
PAGE	6 OF 31

REV. 3/2010

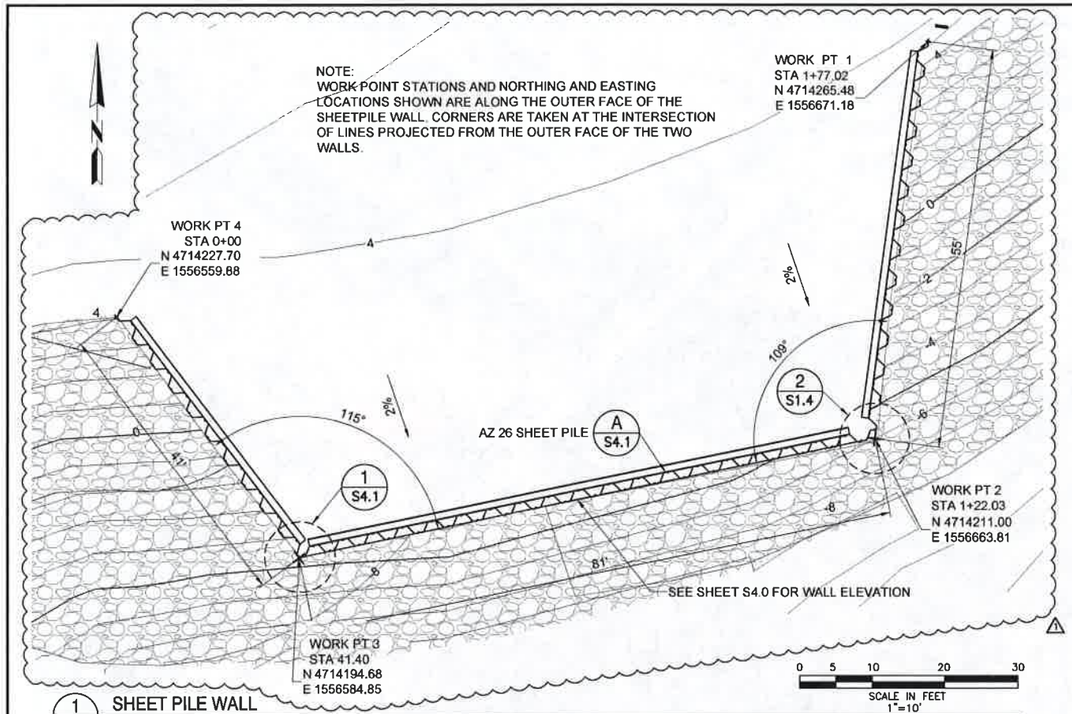

1 G1.7 SHEET PILE WALL
SCALE: 1' = 10'

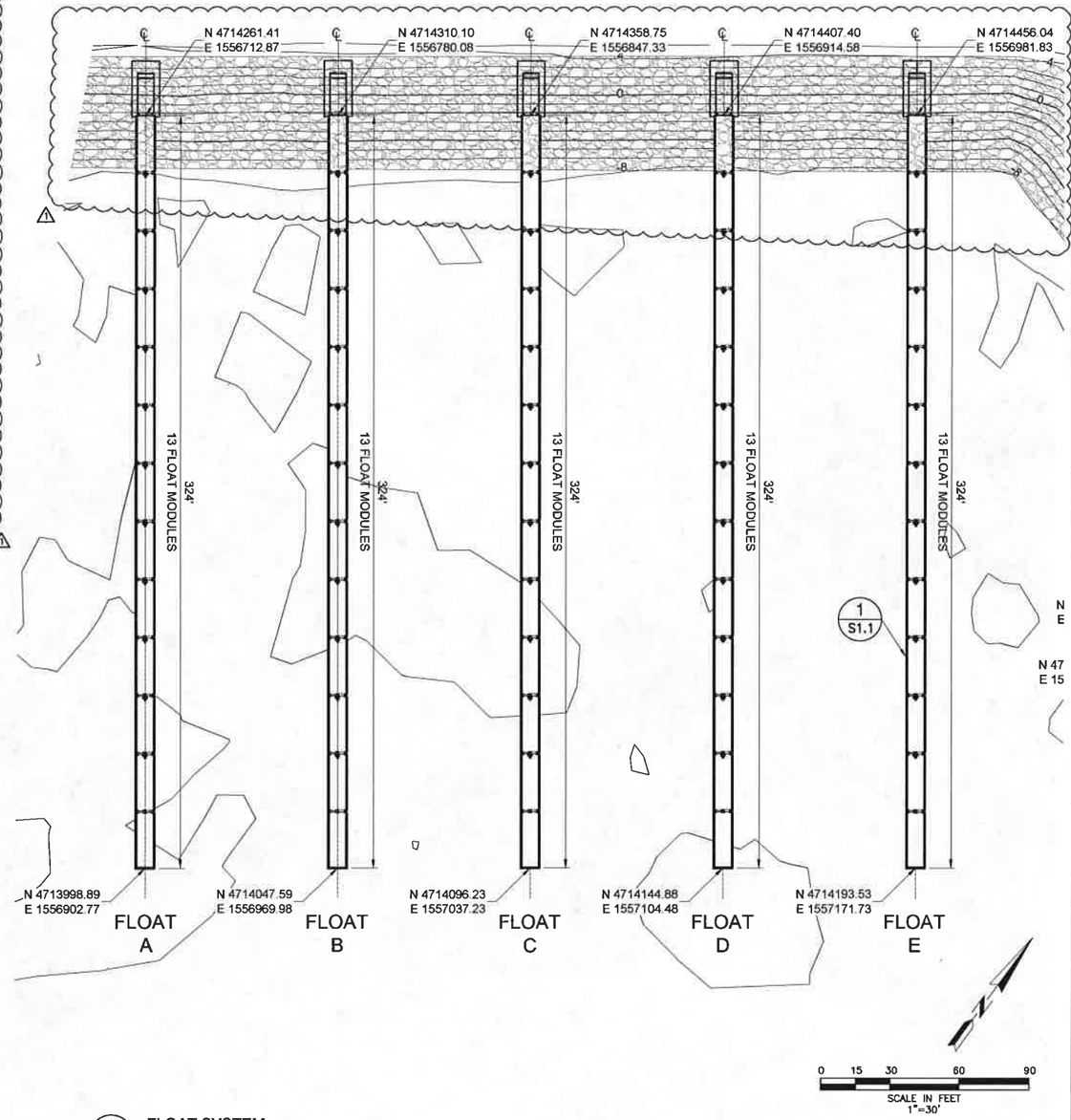

2 G1.7 FLOAT SYSTEM
SCALE: 1" = 30'

STATE OF ALASKA
49TH
Elizabeth Greer
No. C 13351
REGISTERED PROFESSIONAL ENGINEER

URS
700 G STREET, SUITE 500
ANCHORAGE, AK 99501
TEL: (907) 279-0543
FAX: (907) 276-7679

CITY OF KOTZEBUE

NO.	BY	DATE	DESCRIPTION
1	BG	1/27/2015	REVISE HATCHING OF ARMOR ROCK

REVISIONS

CITY OF KOTZEBUE
SWAN LAKE HARBOR FACILITY IMPROVEMENTS
KOTZEBUE, AK

FLOAT SYSTEM AND SHEET PILE WALL

PROJECT NO.	26221281
DATE	01/27/2015
DESIGNED:	JD/EG
DRAWN BY:	CB/BG
CHECKED BY:	EG
SHEET	G1.7
PAGE	8 OF 31

REV. 3/2010

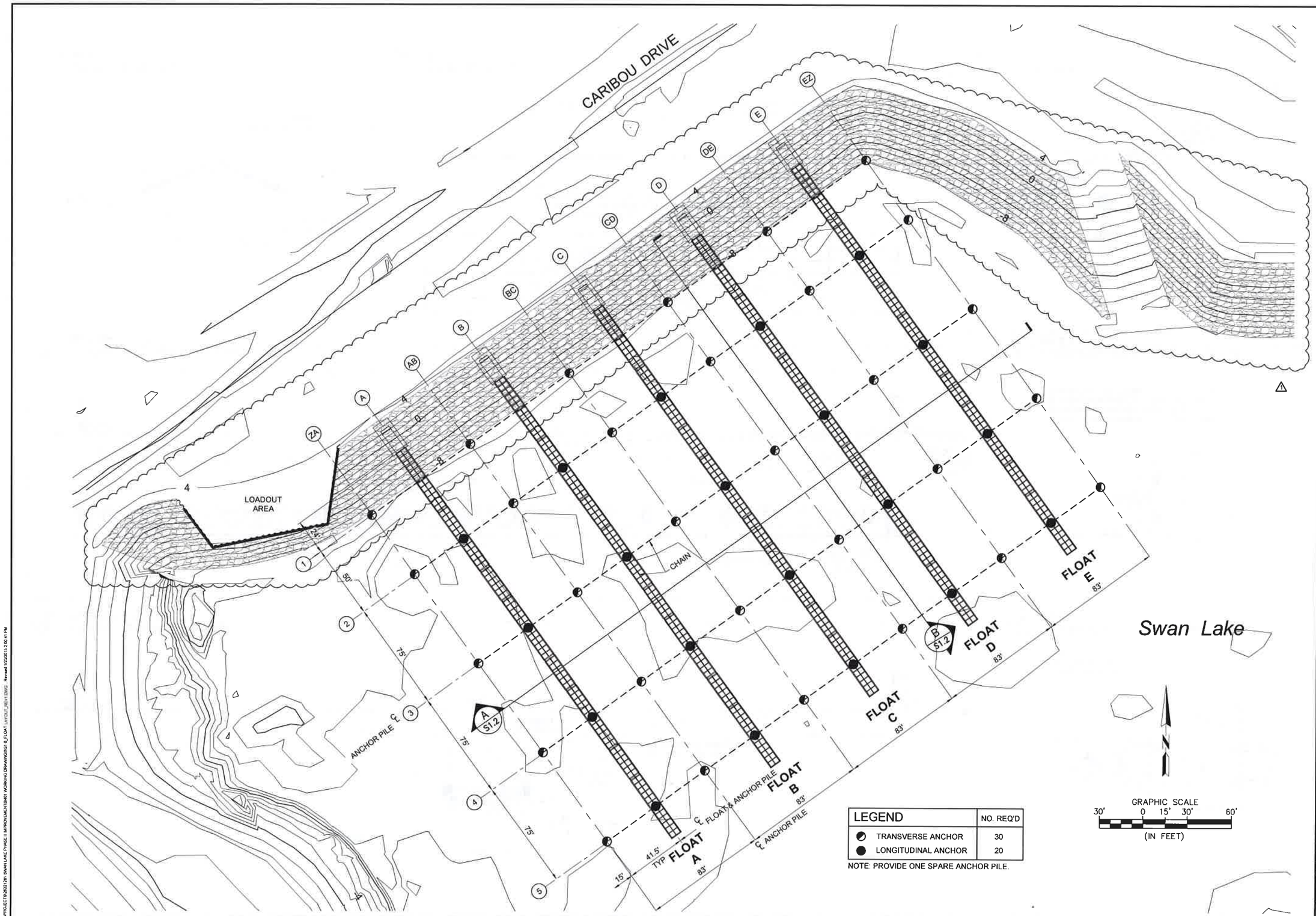

LEGEND	NO. REQ'D
TRANSVERSE ANCHOR	30
LONGITUDINAL ANCHOR	20

NOTE: PROVIDE ONE SPARE ANCHOR PILE.

STATE OF ALASKA 49TH
Elizabeth Greer
No. C 13351
REGISTERED PROFESSIONAL ENGINEER

URS
700 G STREET, SUITE 500
ANCHORAGE, AK 99501
TEL: (907) 279-0543
FAX: (907) 276-7679

REVISIONS

NO.	BY	DATE	DESCRIPTION
1	BG	1/22/2015	REVISE HATCHING OF ARMOR ROCK

CITY OF KOTZEBUE
SWAN LAKE HARBOR FACILITY IMPROVEMENTS
KOTZEBUE, AK

FLOAT ANCHOR LAYOUT

PROJECT NO	26221281
DATE	01/27/2015
DESIGNED	JD/EG
DRAWN BY	CB/BG
CHECKED BY	EG
SHEET	S1.0
PAGE	9 OF 31

REV. 3/2010

G:\PROJECTS\26221281 SWAN LAKE PHASE II IMPROVEMENTS\04\01 WORKING DRAWINGS\S_FLOAT LAYOUT_REV1.DWG - Revised 1/23/2015 2:02:41 PM

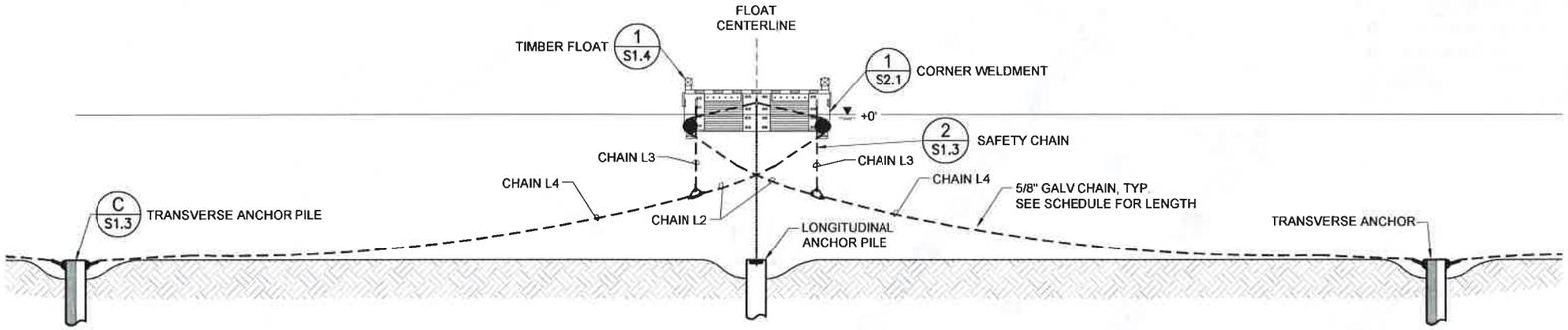

A S1.3 TYPICAL TRANSVERSE SECTION
SCALE: 1/4" = 1'-0

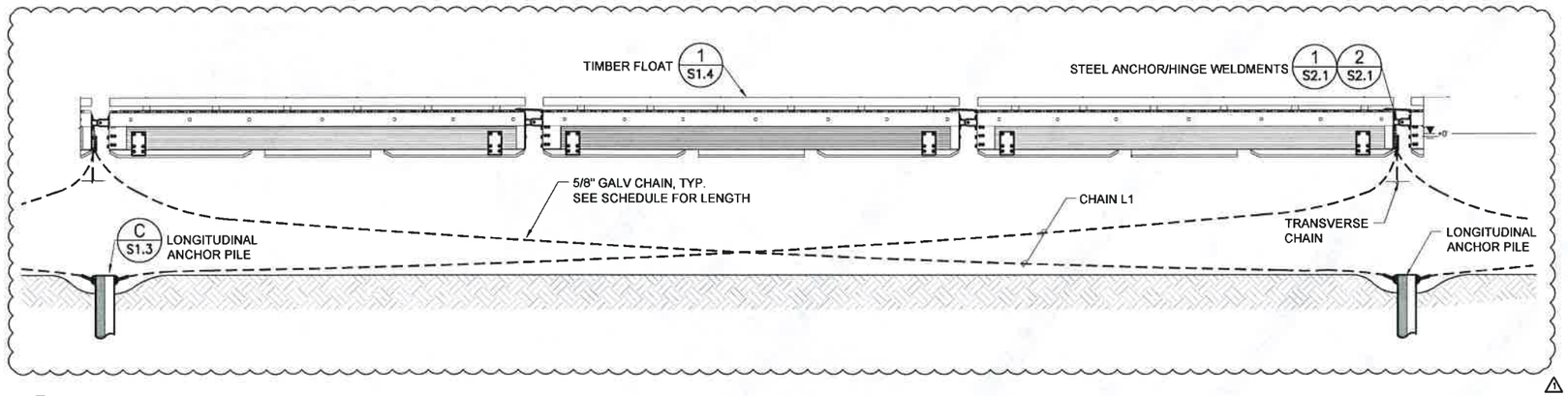

B S1.3 TYPICAL LONGITUDINAL SECTION
SCALE: 1/4" = 1'-0"

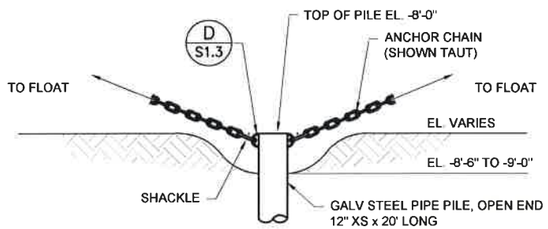

C S1.3 DRIVEN ANCHOR PILE
SCALE: N.T.S. = 1'-0"

CHAIN LENGTH SCHEDULE					
LOCATION		LENGTH			
		L1	L2	L3	L4
FLOATS A-E	TRANSVERSE	-	11.66'	3.53'	40.20'
	LONGITUDINAL	78.5'	-	-	-
		-			

NOTE:
CHAIN LENGTHS L1 AND L4 ARE APPROXIMATE. SEE GENERAL NOTES FOR FINAL CUTTING LENGTHS. PROVIDE AT LEAST TWO PERCENT MORE CHAIN THAN SCHEDULED TO ALLOW FOR VARIATIONS.

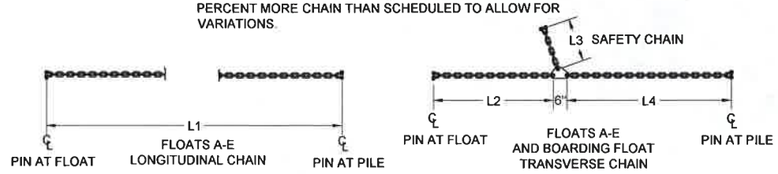

1 S1.3 CHAIN SCHEDULE
SCALE: N.T.S.

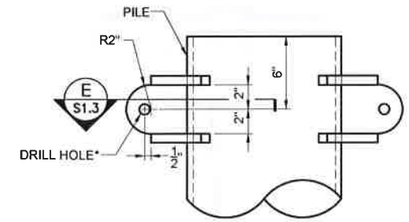

* HOLE SIZE TO BE COORDINATED WITH SHACKLE

D S1.3 CONNECTION AT TOP OF ANCHOR PILE
SCALE: 2 = 1'-0"

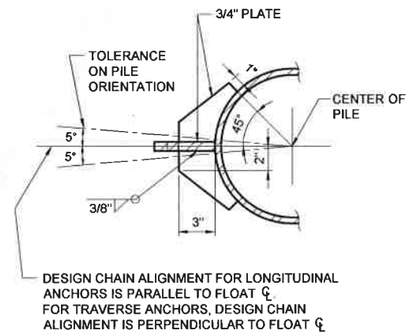

E S1.3 CONNECTION AT TOP OF ANCHOR PILE
SCALE: 2 = 1'-0"

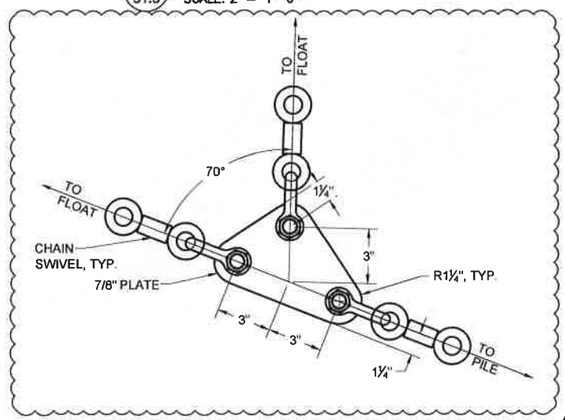

2 S1.3 SAFETY CHAIN PLATE
SCALE: N.T.S.

STATE OF ALASKA 49TH Elizabeth Greer No C 13351 REGISTERED PROFESSIONAL ENGINEER

URS
700 G STREET, SUITE 500
ANCHORAGE, AK 99501
TEL: (907) 279-0543
FAX: (907) 276-7679

CITY OF KOTZEBUE

NO.	BY	DATE	REVISIONS DESCRIPTION
1	BG	1/22/2015	ADDED SKID CONNECTION PLATE

CITY OF KOTZEBUE
SWAN LAKE HARBOR FACILITY IMPROVEMENTS
KOTZEBUE, AK
FLOAT ANCHOR SECTIONS AND DETAILS

PROJECT No: 26221281
DATE: 01/27/2015
DESIGNED: JD/EG
DRAWN BY: CB/BG
CHECKED BY: EG
SHEET: S1.3
PAGE 12 OF 31

REV: 3/2010

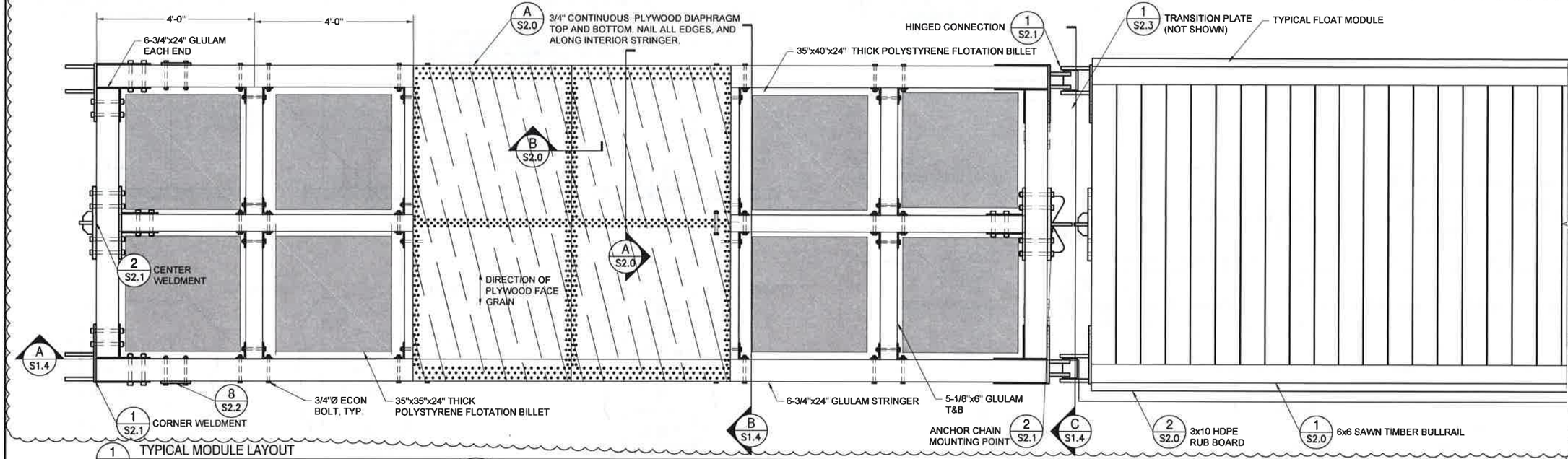

1 S1.4 TYPICAL MODULE LAYOUT
SCALE: 3/4" = 1'-0"

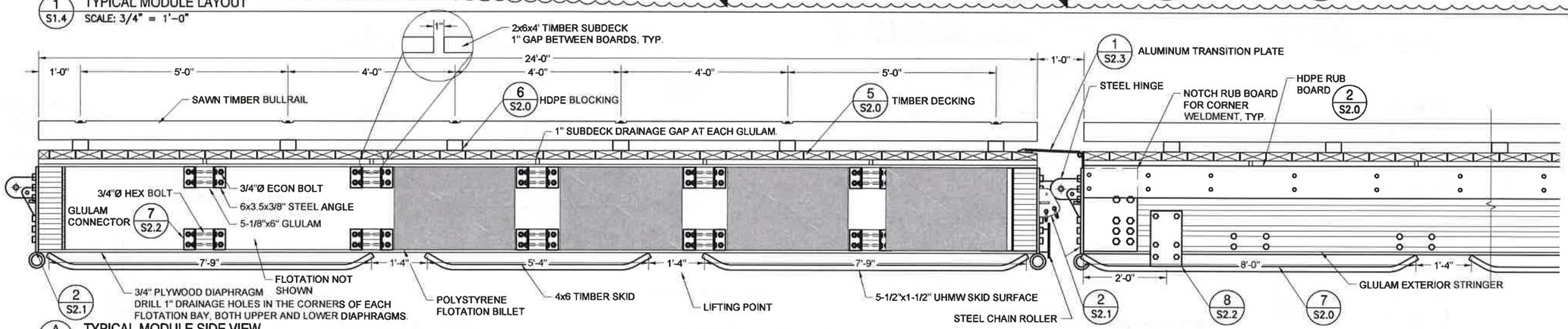

A S1.4 TYPICAL MODULE SIDE VIEW
SCALE: 3/4" = 1'-0"

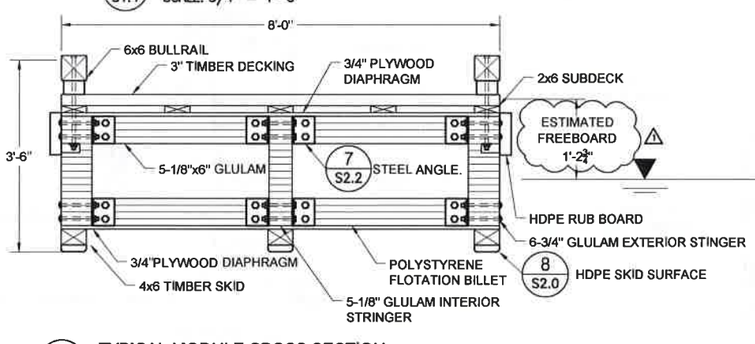

B S1.4 TYPICAL MODULE CROSS SECTION
SCALE: 3/4" = 1'-0"

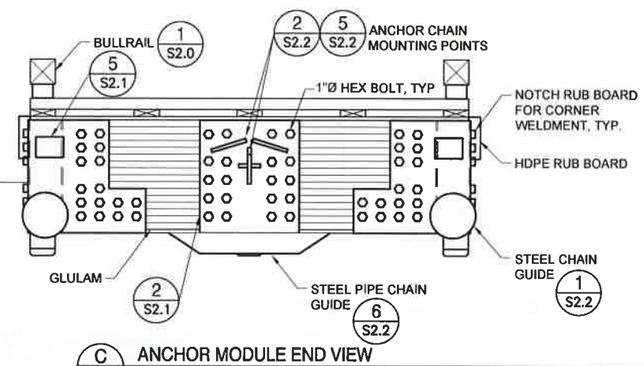

C S1.4 ANCHOR MODULE END VIEW
SCALE: 3/4" = 1'-0"

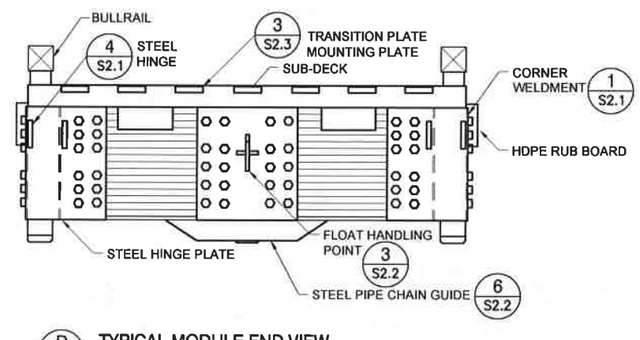

D S1.4 TYPICAL MODULE END VIEW
SCALE: 3/4" = 1'-0"

STATE OF ALASKA 49TH
Elizabeth Greer
No. C 13351
REGISTERED PROFESSIONAL ENGINEER

URS
700 G STREET, SUITE 500
ANCHORAGE, AK 99501
TEL: (907) 279-0543
FAX: (907) 276-7979

CITY OF KOTZEBUE

REVISIONS

NO.	BY	DATE	DESCRIPTION
1	BG	1/27/2015	ADD SECTION CUT CALLOUT
			ADD CONNECTION PLATE

CITY OF KOTZEBUE
SWAN LAKE HARBOR FACILITY IMPROVEMENTS
KOTZEBUE, AK

TYPICAL FLOAT LAYOUT

PROJECT NO 26221281
DATE 01/27/2015
DESIGNED JD/EG
DRAWN BY CB/BG
CHECKED BY EG
SHEET S1.4

REV. 3/2010

G:\PROJECT\26221281 SWAN LAKE PHASE II IMPROVEMENT\TASK\ WORKING DRAWINGS\B1 4-1_TYPICAL FLOAT MODULE_REV1.DWG , Revised 1/27/2015 3:38:18 PM

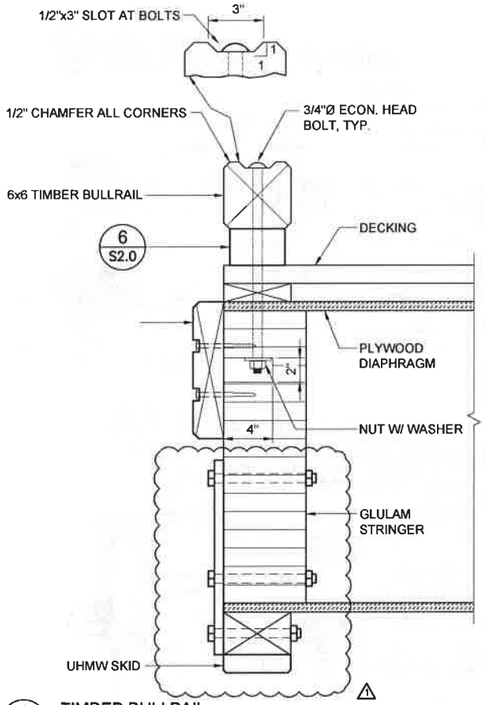

1 S2.0 TIMBER BULLRAIL
SCALE: 2" = 1'-0"

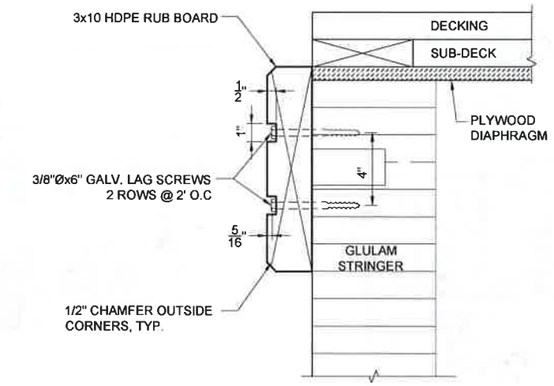

2 S2.0 HDPE BUMPER BOARD
SCALE: 3" = 1'-0"

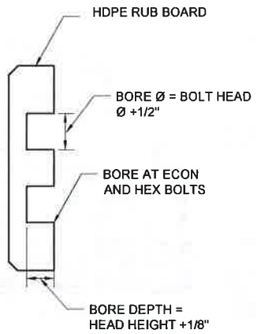

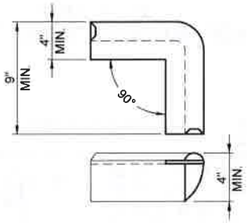

NOTE:
FLOAT CORNER BUMPERS SHALL BE HEAVY DUTY, MARINE GRADE VINYL, RESISTANT TO UV DECAY, AND SECURED TO RUB BOARD WITH GALVANIZED SCREWS OR LAG BOLTS.

4 S2.0 CORNER BUMPER BOARD
SCALE: NTS

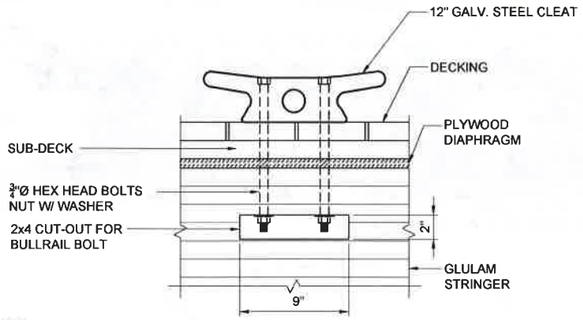

3 S2.0 BOARDING FLOAT CLEAT
SCALE: 2" = 1'-0"

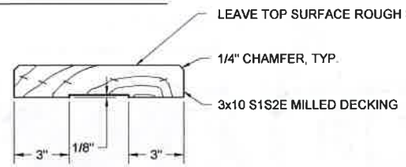

NOTES:

1. MILL S1S2E ROUGH SIDE UP. MILLED SIDE SHALL BE TOWARDS THE CENTER OF THE TREE.
2. DECKING SHALL BE SPACED 1/4" APART AND SECURED WITH WITH 3 EA. 60d 0.200" Øx6" L GALVANIZED SPIRAL NAILS AT EACH STRINGER. PREDRILL TYP.
3. FLOATS HAVE AN ANGLED DECK BOARD ON ONE END TO ACCOMMODATE THE TRANSITION PLATE. SEE DETAIL 5/S2.3

5 S2.0 TYPICAL TIMBER DECKING
SCALE: 3" = 1'-0"

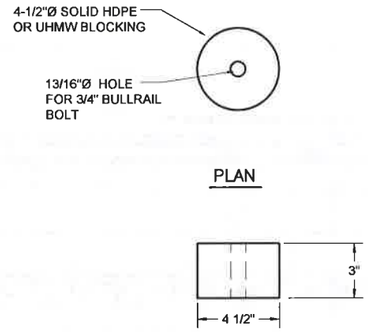

6 S2.0 BULLRAIL BLOCKING
SCALE: 3" = 1'-0"

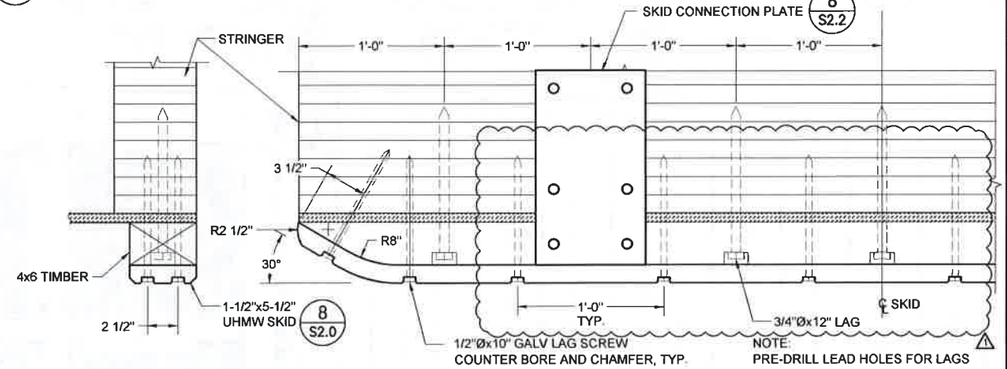

7 S2.0 TIMBER SKID DETAIL
SCALE: 2" = 1'-0"

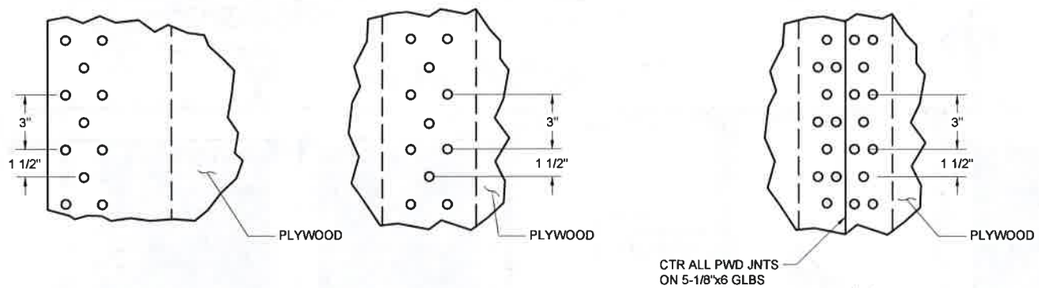

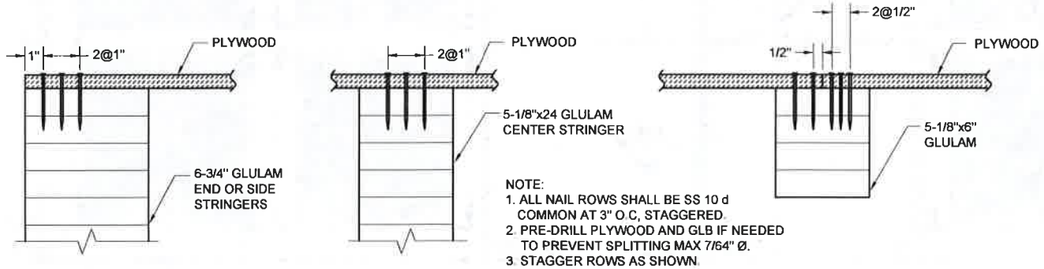

NOTE:
1. ALL NAIL ROWS SHALL BE SS 10 d COMMON AT 3" O.C, STAGGERED.
2. PRE-DRILL PLYWOOD AND GLB IF NEEDED TO PREVENT SPLITTING MAX 7/64" Ø.
3. STAGGER ROWS AS SHOWN.
4. USE THREE ROWS(SHOWN) AT ALL GLULAMS EXCEPT USE FOUR ROWS AT END GLULAMS AND WITHIN FOUR FEET OF ENDS OF SIDE AND CENTER STRINGERS.

A S2.0 PLYWOOD NAILING
SCALE: 3" = 1'-0"

B S2.0 PLYWOOD NAILING AT JOINT
SCALE: 3" = 1'-0"

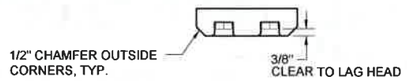

8 S2.0 UHMW SKID DETAIL
SCALE: 2" = 1'-0"

STATE OF ALASKA 49TH Elizabeth Greer No C 13351 REGISTERED PROFESSIONAL ENGINEER

URS
700 G STREET, SUITE 500
ANCHORAGE, AK 99501
TEL: (907) 279-0543
FAX: (907) 276-7679

CITY OF KOTZEBUE

REVISIONS

NO.	BY	DATE	DESCRIPTION
1	BG	1/22/2015	ADD SKID CONNECTION PLATE, DET 1
			CENTER LAG SCREWS ON
			CONNECTION PLATE, DET 7

CITY OF KOTZEBUE
SWAN LAKE HARBOR FACILITY IMPROVEMENTS
KOTZEBUE, AK
FLOAT DETAILS

PROJECT NO 26221281
DATE 01/27/2015
DESIGNED JD/EG
DRAWN BY CB/BG
CHECKED BY EG
SHEET S2.0
PAGE 15 OF 31

REV. 3/2010

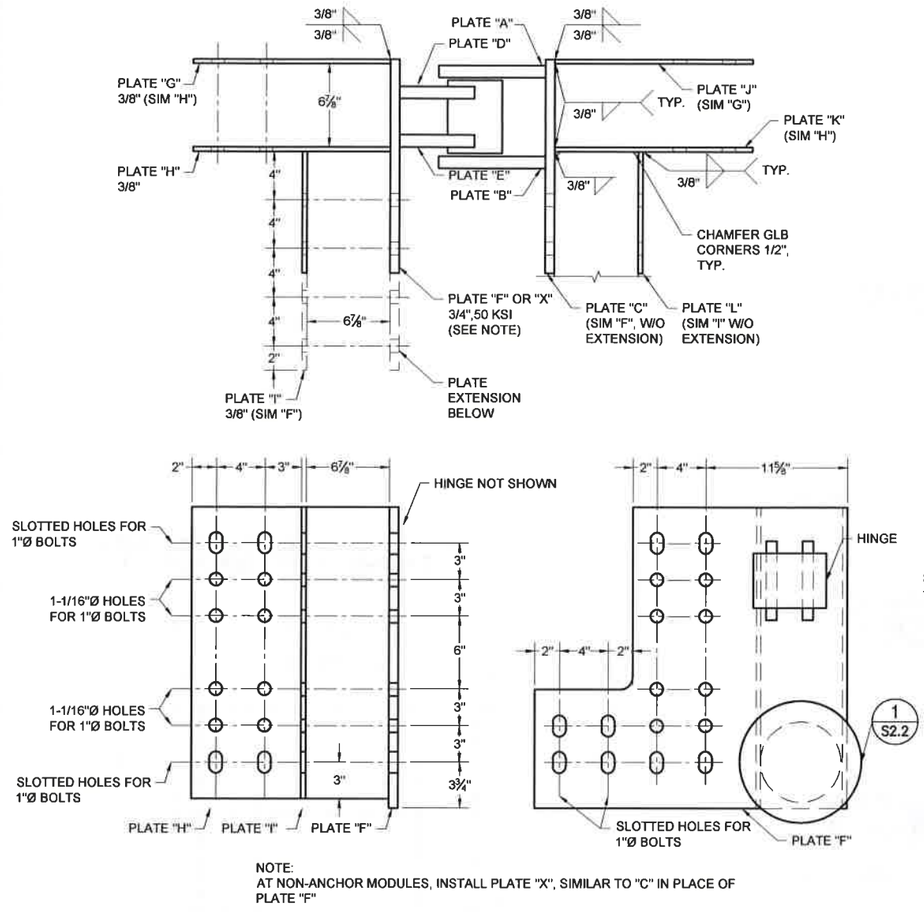

1 S2.1 CORNER WELDMENT ASSEMBLIES
SCALE: 2" = 1'-0"

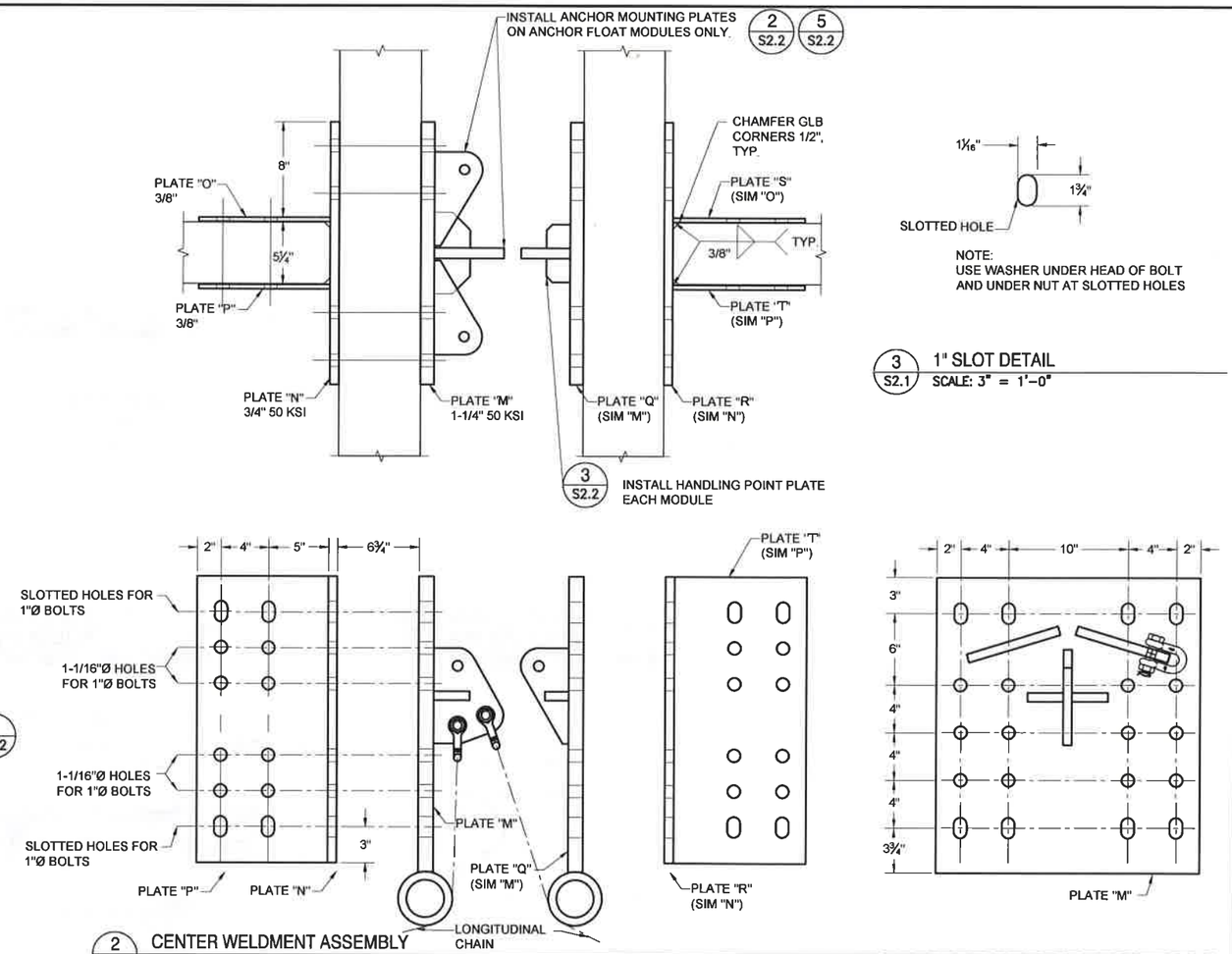

2 S2.1 CENTER WELDMENT ASSEMBLY
SCALE: 2" = 1'-0"

NOTE:
USE WASHER UNDER HEAD OF BOLT
AND UNDER NUT AT SLOTTED HOLES

3 S2.1 1" SLOT DETAIL
SCALE: 3" = 1'-0"

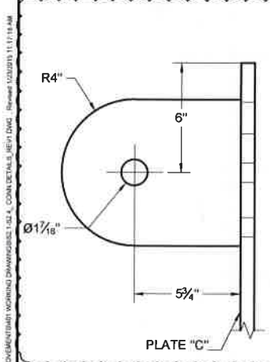

4 S2.1 HINGE PLATES A AND B
SCALE: 3" = 1'-0"

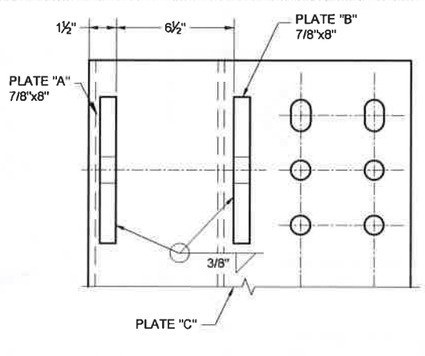

5 S2.1 HINGE PLATES E AND D
SCALE: 3" = 1'-0"

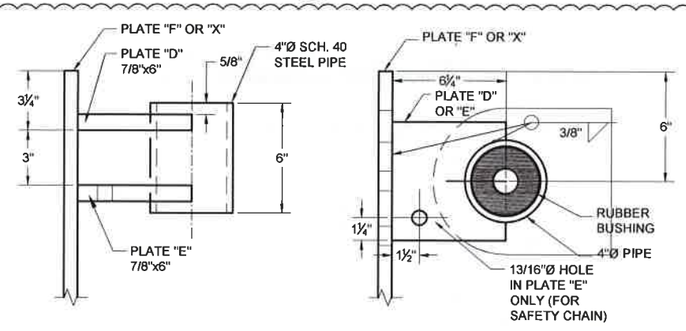

6 S2.1 HINGE ASSEMBLY
SCALE: 3" = 1'-0"

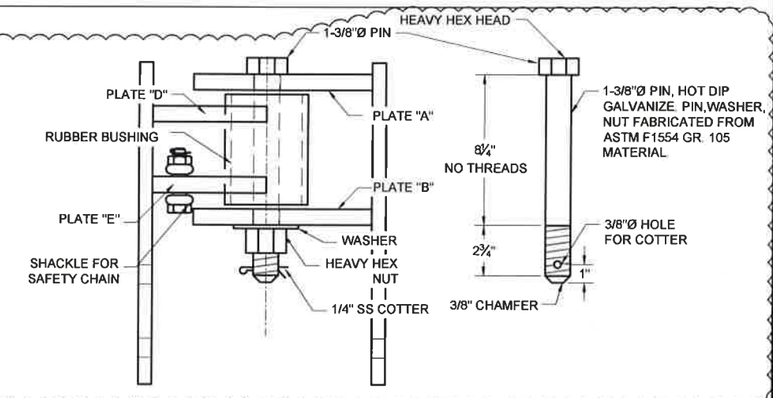

STATE OF ALASKA 49TH
Elizabeth Greer
No. C 13351
REGISTERED PROFESSIONAL ENGINEER

URS
700 G STREET, SUITE 500
ANCHORAGE, AK 99501
TEL: (907) 274-4543
FAX: (907) 276-7679

CITY OF KOTZEBUE

NO.	BY	DATE	REVISIONS DESCRIPTION
1	BG	1/23/2015	REVISE DETAILS

CITY OF KOTZEBUE
SWAN LAKE HARBOR FACILITY IMPROVEMENTS
KOTZEBUE, AK

FLOAT CONNECTION DETAILS (1 OF 3)

PROJECT NO.	26221281
DATE	01/27/2015
DESIGNED	JD/EG
DRAWN BY	CB/BG
CHECKED BY	EG
SHEET	S2.1
PAGE	16 OF 31

REV. 3/2010

G:\PROJECT\26221281 SWAN LAKE PHASE II IMPROVEMENT\DAILY WORKING DRAWINGS\S2.1-S2.4_CONN DETAILS_REV1.DWG - Revised 1/23/2015 11:17:19 AM

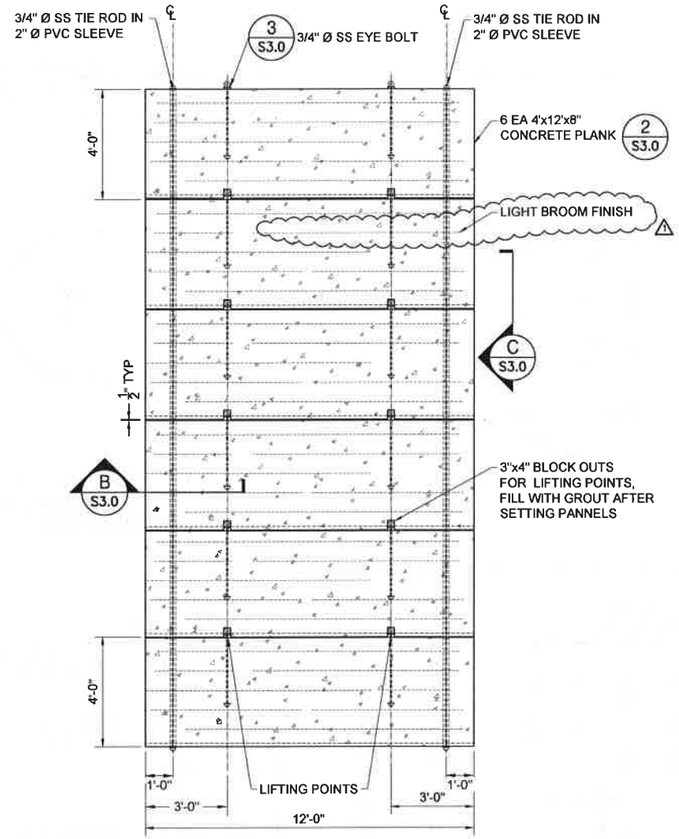

1 S3.0 CONCRETE FLOAT LANDING PAD
SCALE: 3/8" = 1'-0"

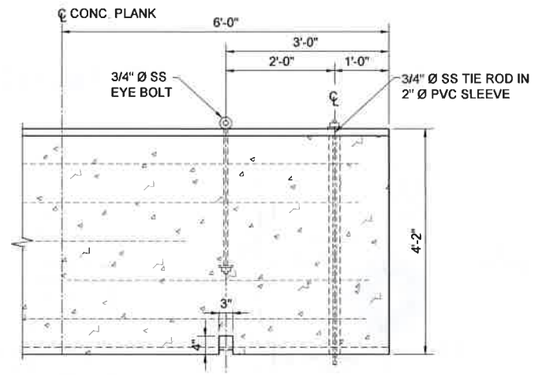

2 S3.0 CONCRETE FLOAT LANDING PAD PLANK PLAN
SCALE: 3/4" = 1'-0"

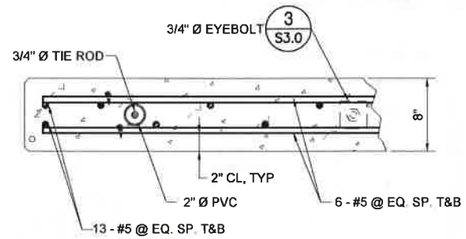

B S3.0 CONCRETE FLOAT LANDING PAD SECTION
SCALE: 1-1/2" = 1'-0"

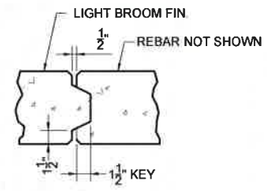

C S3.0 CONCRETE FLOAT LANDING PAD ELEVATION
SCALE: 1-1/2" = 1'-0"

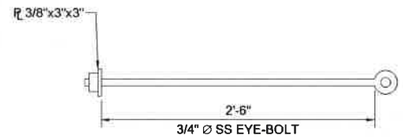

3 S3.0 LANDING PAD EYEBOLT
SCALE: 1-1/2" = 1'-0"

STATE OF ALASKA
49TH
Elizabeth Greer
No. C 13351
REGISTERED PROFESSIONAL ENGINEER

URS
700 G STREET, SUITE 500
ANCHORAGE, AK 99501
TEL: (907) 279-0543
FAX: (907) 276-7679

CITY OF KOTZEBUE

REVISIONS

NO.	BY	DATE	DESCRIPTION
1	BG	1/23/2015	ADDED CONCRETE FINISH

CITY OF KOTZEBUE
SWAN LAKE HARBOR FACILITY IMPROVEMENTS
KOTZEBUE, AK
CONCRETE LANDING PAD

PROJECT No.	26221281
DATE	01/27/2015
DESIGNED	JD/EG
DRAWN BY	BG
CHECKED BY	EG
SHEET	S3.0
PAGE	19 OF 31

REV. 3/2010

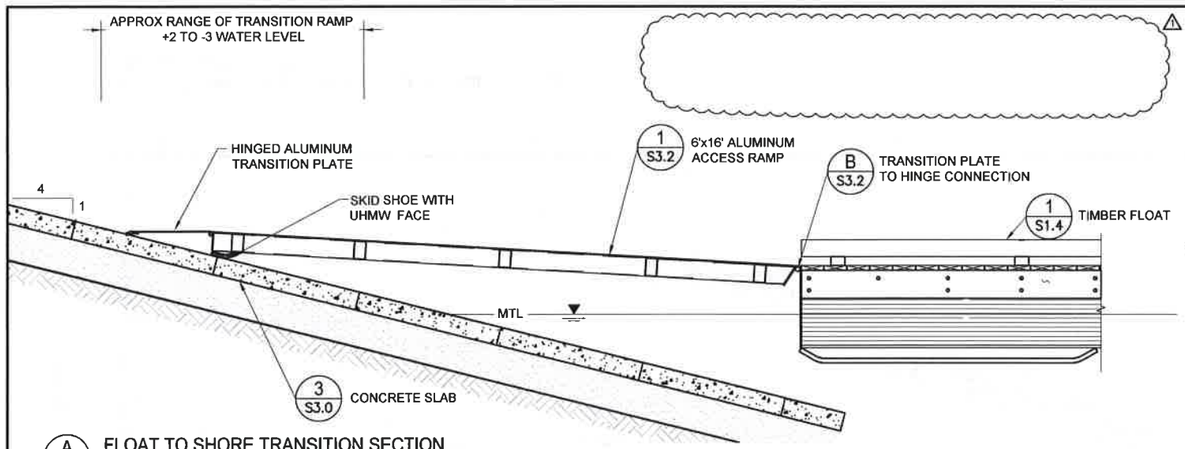

A S3.2 FLOAT TO SHORE TRANSITION SECTION
SCALE: 1/2" = 1'-0"

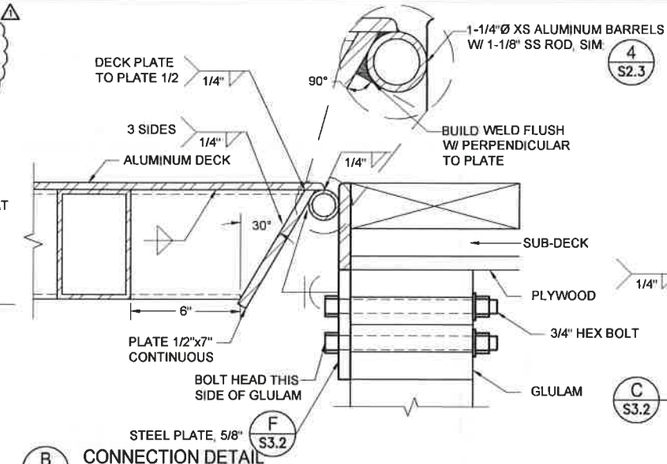

B S3.2 CONNECTION DETAIL
SCALE: 3" = 1'-0"

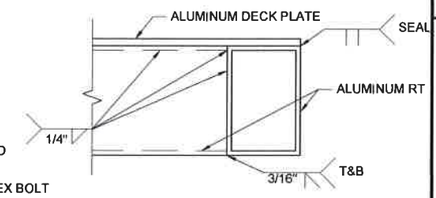

C S3.2 SECTION AT EDGE
SCALE: 3" = 1'-0"

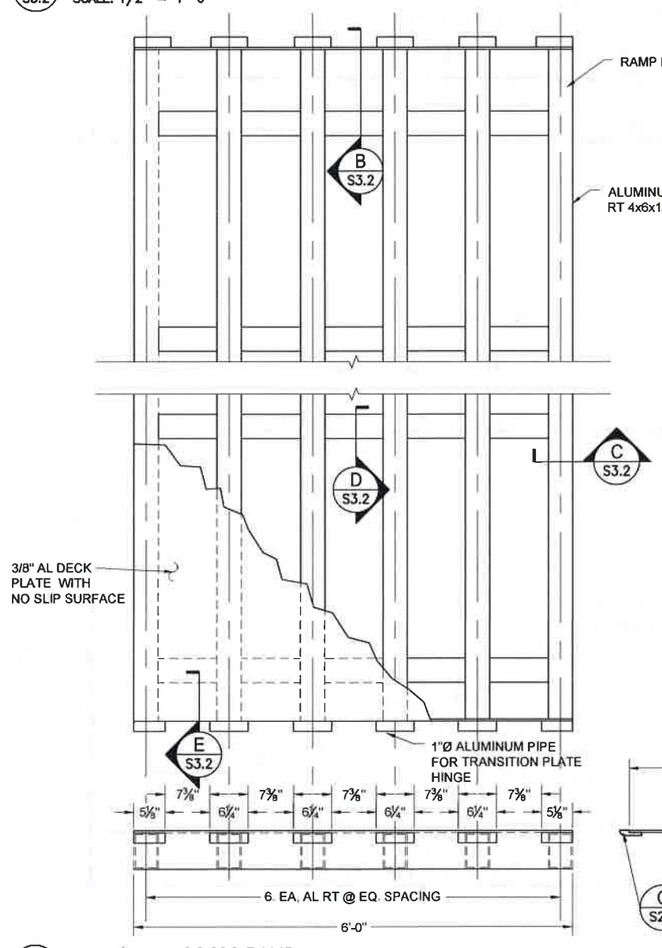

1 S3.2 ALUMINUM ACCESS RAMP
SCALE: 1" = 1'-0"

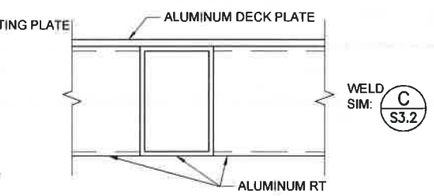

D S3.2 SECTION @ CROSS BRACE
SCALE: 3" = 1'-0"

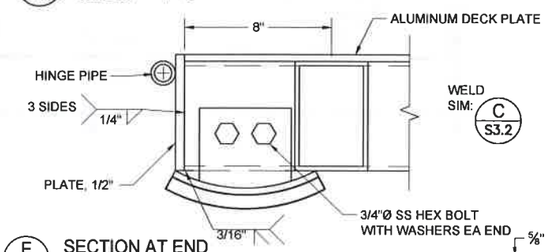

E S3.2 SECTION AT END
SCALE: 3" = 1'-0"

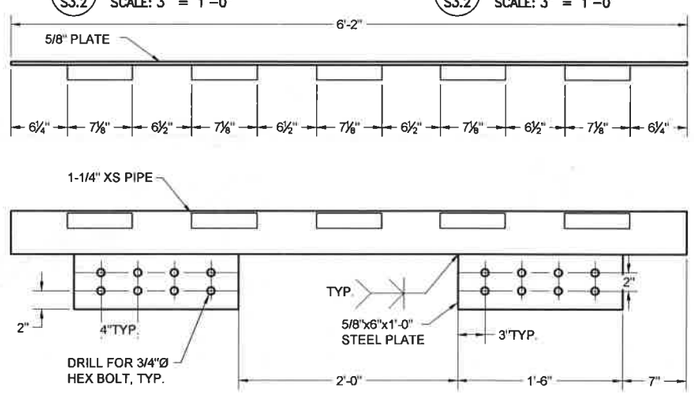

F S3.2 HINGE PLATE
SCALE: 3" = 1'-0"

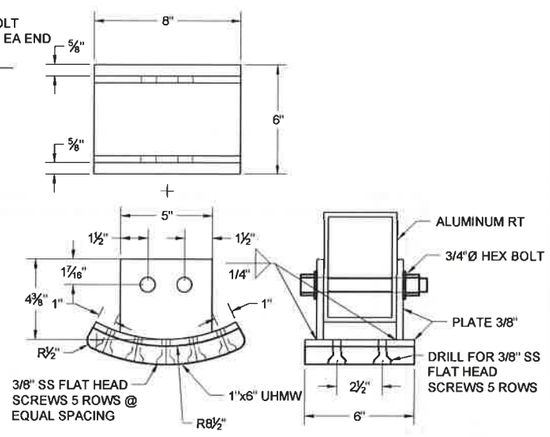

G S3.2 SKID SHOE
SCALE: 3" = 1'-0"

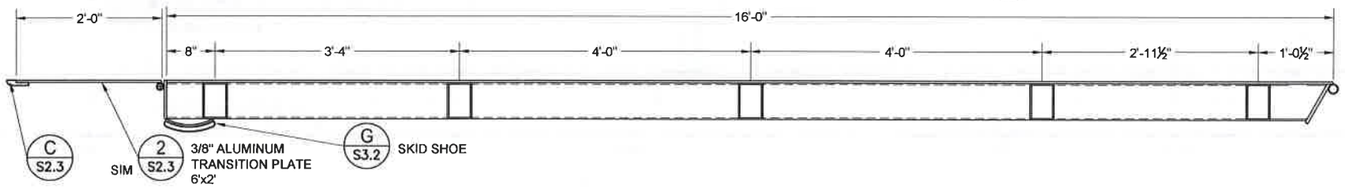

STATE OF ALASKA 49TH Elizabeth Greer No. C 13351 PROFESSIONAL ENGINEER

URS
700 G STREET, SUITE 500
ANCHORAGE, AK 99501
TEL: (907) 279-0543
FAX: (907) 276-7679

CITY OF KOTZEBUE

NO.	BY	DATE	REVISIONS DESCRIPTION
1	BG	1/23/2015	RELOCATED NOTE TO SHEET G1.3

CITY OF KOTZEBUE
SWAN LAKE HARBOR FACILITY IMPROVEMENTS
KOTZEBUE, AK

ACCESS RAMP SECTION AND DETAILS

PROJECT NO	26221281
DATE	01/27/2015
DESIGNED	JD/EG
DRAWN BY	CB/BG
CHECKED BY	EG
SHEET	S3.2
PAGE	21 OF 31

REV. 3/2010

G:\PROJECTS\26221281 SWAN LAKE PHASE II IMPROVEMENTS\01 WORKING DRAWINGS\S3.2_TRANSITION PLATE DETAILS_REV1.DWG Revised 1/23/2015 10:43:36 AM

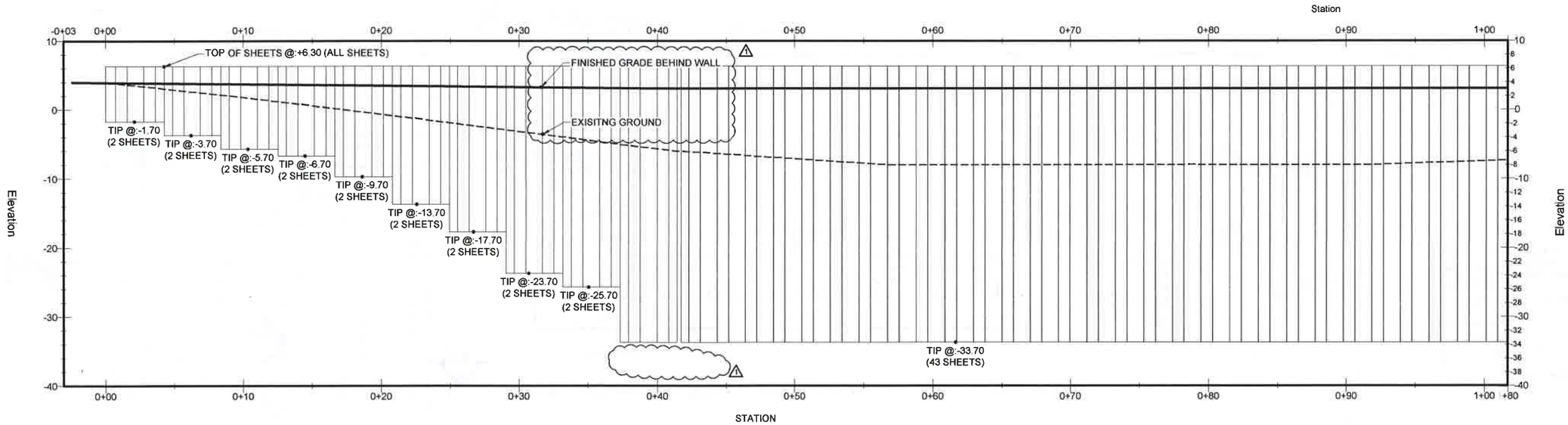

1 / S4.0 SHEETPILE WALL ELEVATION, STA 0+00 - 1+00
SCALE: 3/4" = 1'-0"

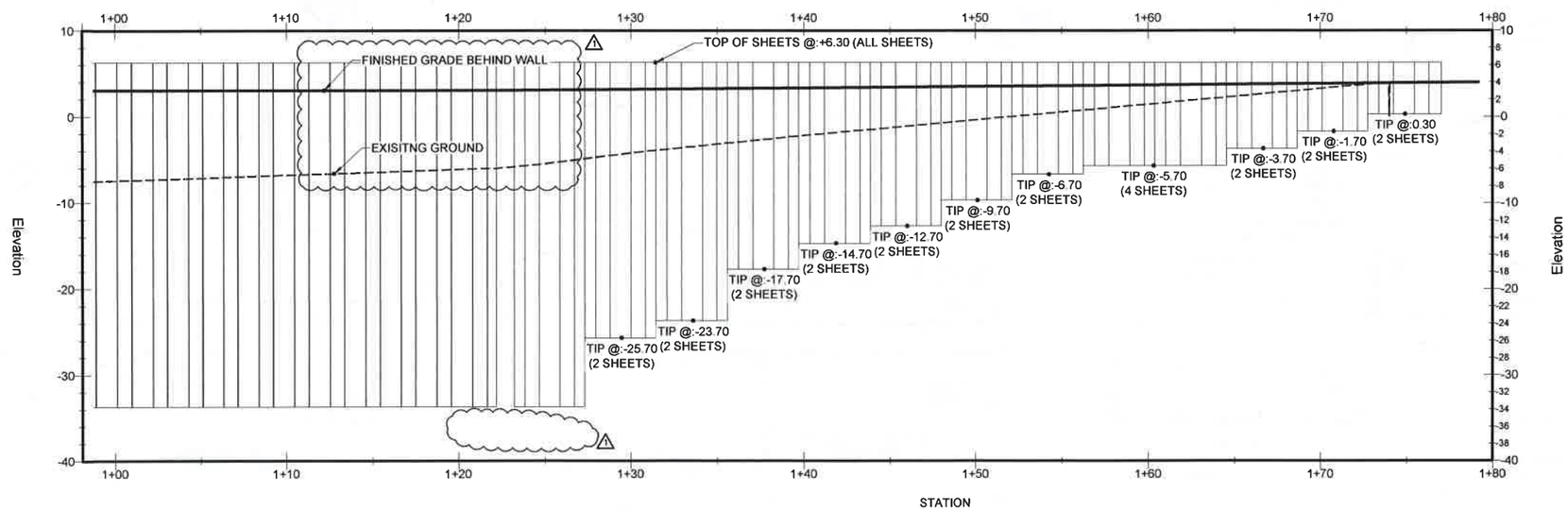

2 / S4.0 SHEETPILE WALL ELEVATION, STA 1+00 - 1+77.02
SCALE: 3/4" = 1'-0"

NOTE:
PROFILE TAKEN ALONG OUTER FACE OF SHEETPILE WALL.

STATE OF ALASKA 49TH. Elizabeth Greer No. C 13351 REGISTERED PROFESSIONAL ENGINEER

URS
700 G STREET, SUITE 500
ANCHORAGE, AK 99501
TEL: (907) 279-0543
FAX: (907) 276-7679

CITY OF KOTZEBUE

NO.	BY	DATE	REVISIONS DESCRIPTION
1	BG	1/23/2015	DELETED NOTATIONS

CITY OF KOTZEBUE
SWAN LAKE HARBOR FACILITY IMPROVEMENTS
KOTZEBUE, AK
SHEET PILE WALL PROFILE

URS JOB CT NO	26221281
DATE	01/27/2015
DESIGNED	JD/EG
DRAWN BY	CB/BG
CHECKED BY	EG
SHEET	S4.0
PAGE	22 OF 31

REV. 3/2010

G:\PROJECTS\26221281 SWAN LAKE PHASE 3 IMPROVEMENTS\BAD\ WORKING DRAWINGS\S4.0 SHEETPILE SECTION.MEDIT.DWG Revised 12/27/2015 3:44:03 PM

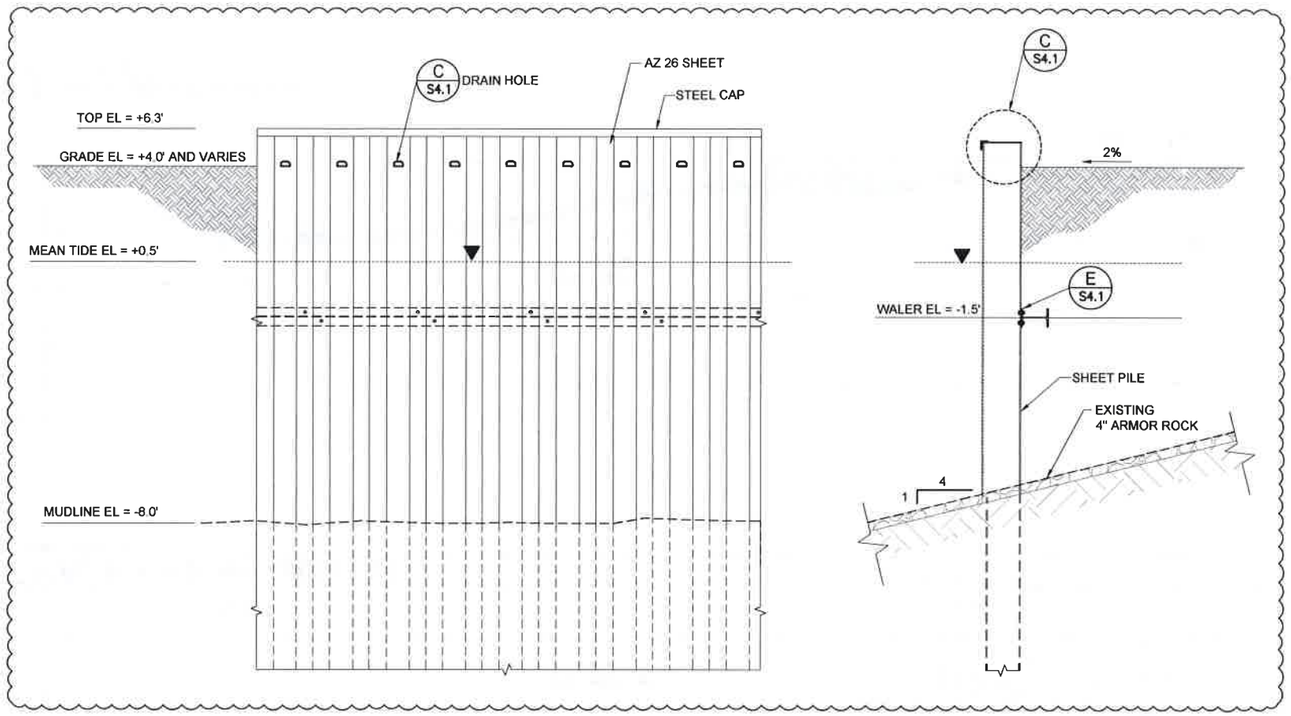

A S4.1 SHEET PILE WALL
SCALE: 3/8" = 1'-0"

B S4.1 SHEET PILE WALL
SCALE: N.T.S.

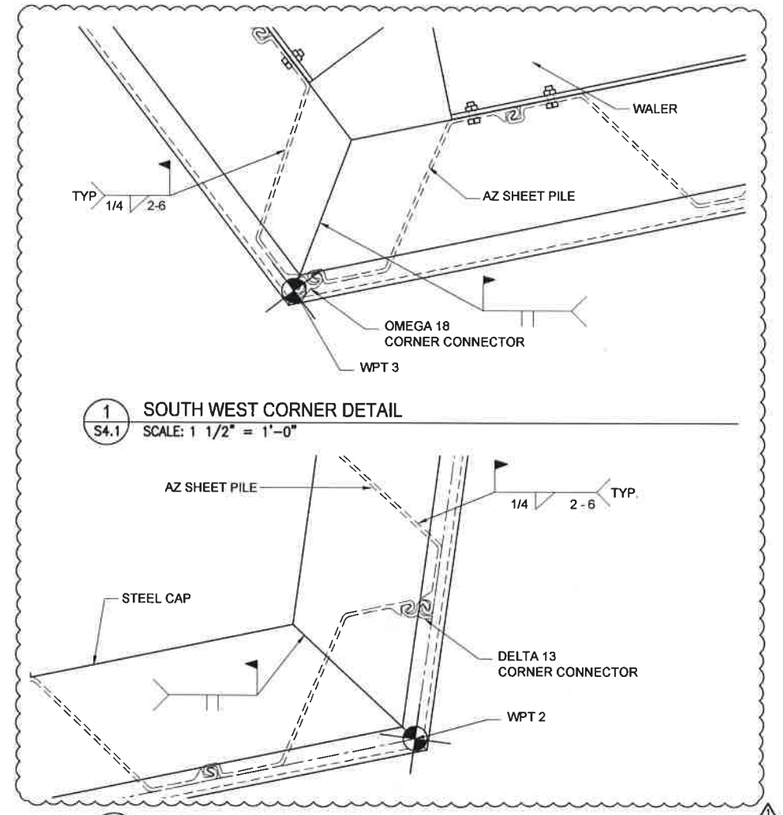

1 S4.1 SOUTH WEST CORNER DETAIL
SCALE: 1 1/2" = 1'-0"

2 S4.1 EAST CORNER DETAIL
SCALE: 1 1/2" = 1'-0"

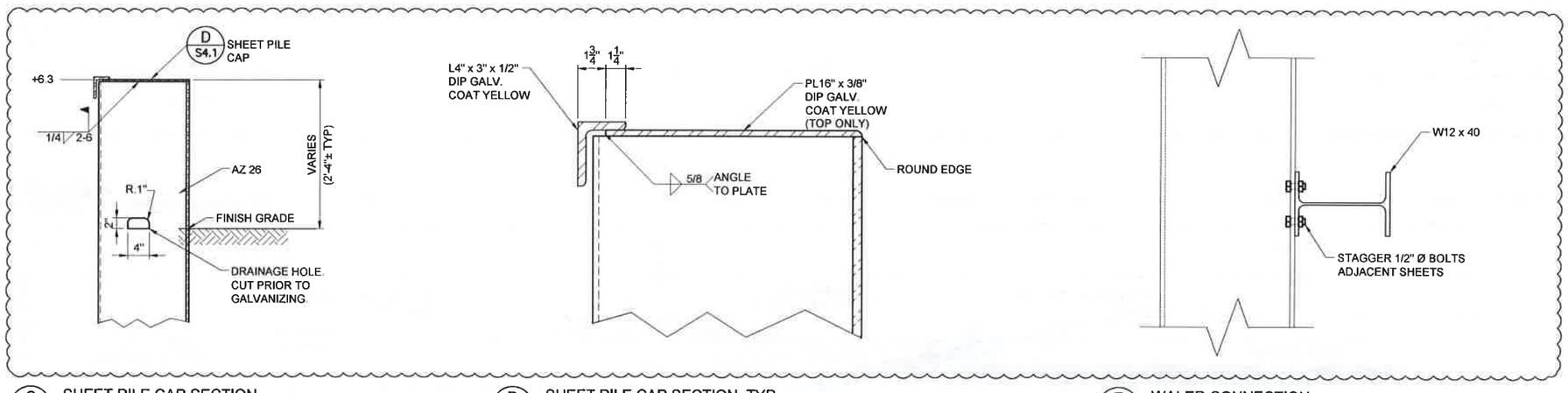

C S4.1 SHEET PILE CAP SECTION
SCALE: 1" = 1'-0"

D S4.1 SHEET PILE CAP SECTION, TYP.
SCALE: 3" = 1'=0"

E S4.1 WALER CONNECTION
SCALE: 3" = 1'=0"

STATE OF ALASKA 49TH Elizabeth Greer No. C 13351 REGISTERED PROFESSIONAL ENGINEER

URS
700 G STREET, SUITE 500
ANCHORAGE, AK 99501
TEL: (907) 279-0543
FAX: (907) 276-7679

CITY OF KOTZEBUE

REVISIONS

NO.	BY	DATE	DESCRIPTION
1	BG	1/27/2015	EDIT MISC NOTES & DIMENSIONS

CITY OF KOTZEBUE
SWAN LAKE HARBOR FACILITY IMPROVEMENTS
KOTZEBUE, AK

SHEET PILE WALL DETAILS

PROJECT No	26221281
DATE	01/27/2015
DESIGNED	JD/EG
DRAWN BY	CB/BG
CHECKED BY	EG
SHEET	S4.1
PAGE	23 OF 31

REV. 3/2010

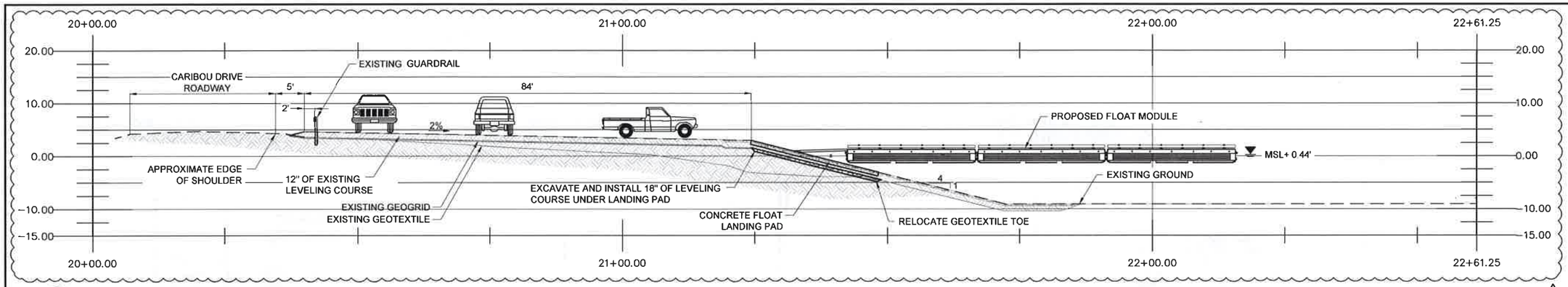

A C1.0 PROFILE OF UPLANDS AND FLOAT
SCALE: 1"=10'-0"

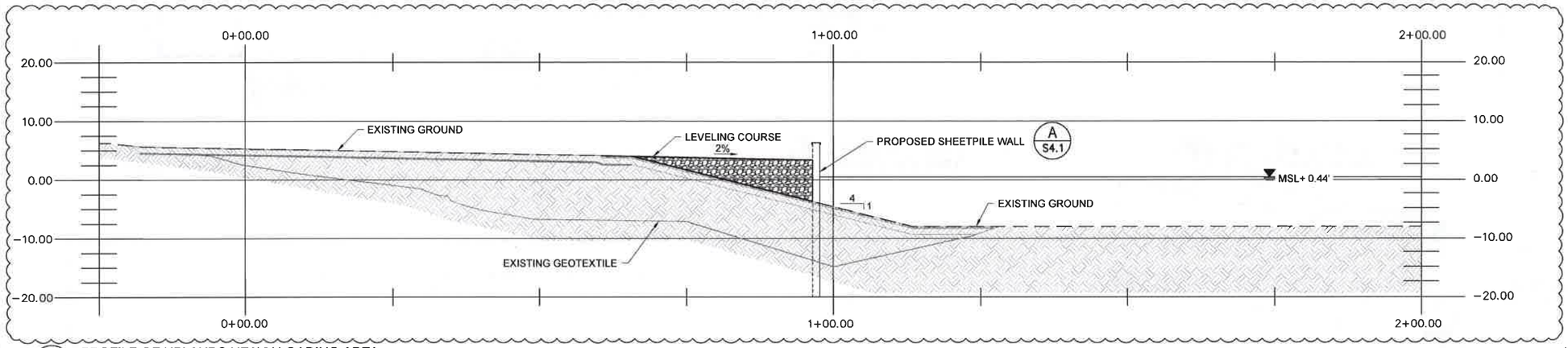

B C1.0 PROFILE OF UPLANDS HEAVY LOADING AREA
SCALE: 1"=10'-0"

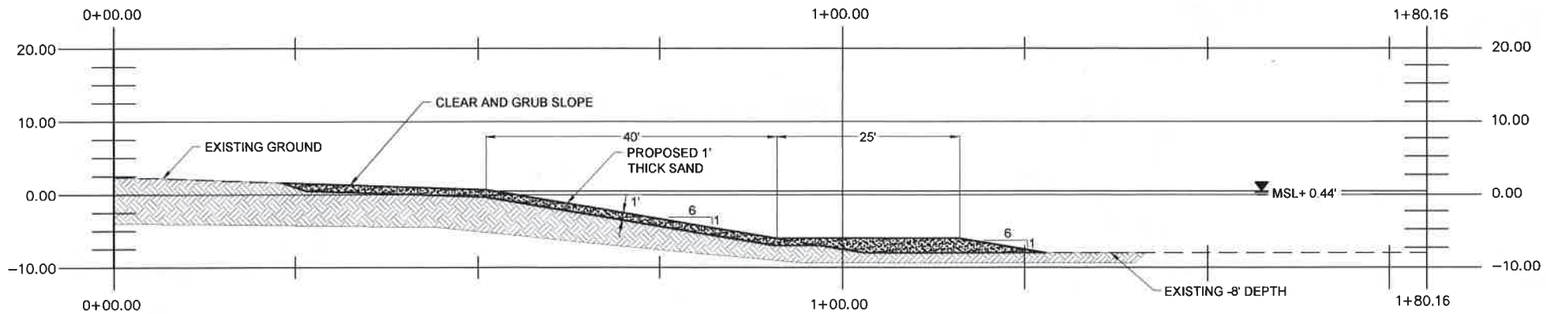

C C1.0 PROFILE OF SLOPE AT SWIM AREA
SCALE: 1"=10'-0"

STATE OF ALASKA 49TH Elizabeth Greer No. C 13351 REGISTERED PROFESSIONAL ENGINEER

URS
700 G STREET, SUITE 500
ANCHORAGE, AK 99501
TEL: (907) 279-0543
FAX: (907) 276-7679

CITY OF KOTZEBUE

REVISIONS

NO.	BY	DATE	DESCRIPTION
1	BG	1/23/2015	REVISE HATCHING AND NOTES

CITY OF KOTZEBUE
SWAN LAKE HARBOR FACILITY IMPROVEMENTS
KOTZEBUE, AK

TYPICAL FLOAT LANDING PAD SECTION

PROJECT NO	26221281
DATE	01/27/2015
DESIGNED	JD/EG
DRAWN BY	BG
CHECKED BY	EG
SHEET	C1.0
PAGE	24 OF 31

REV. 3/2010

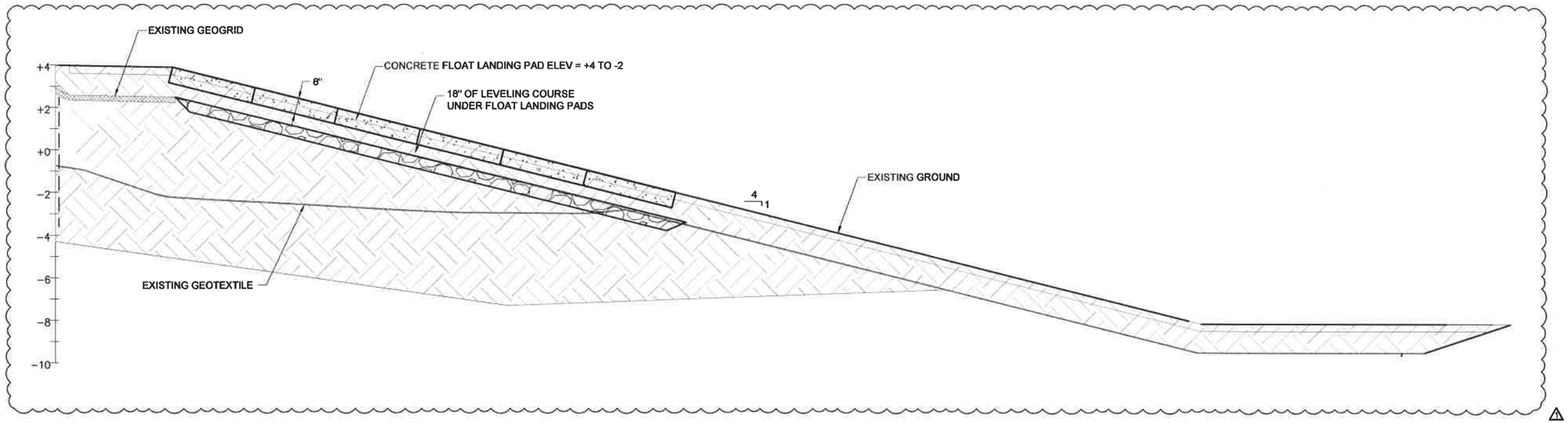

1 C2.0 CONCRETE FLOAT LANDING PAD DETAIL
SCALE: N.T.S.

STATE OF ALASKA 49TH Elizabeth Greer No. C 13351 REGISTERED PROFESSIONAL ENGINEER

URS
700 G STREET, SUITE 500
ANCHORAGE, AK 99501
TEL: (907) 279-0543
FAX: (907) 276-7679

CITY OF KOTZEBUE

REVISIONS

NO.	BY	DATE	DESCRIPTION
1	BG	1/22/2015	REVISE HATCHING AND NOTES

CITY OF KOTZEBUE
SWAN LAKE HARBOR FACILITY IMPROVEMENTS
KOTZEBUE, AK

FLOAT LANDING PAD DETAIL

PROJECT NO. 26221281
DATE: 01/27/2015
DESIGNED: JD/EG
DRAWN BY: BG
CHECKED BY: EG
SHEET: C2.0
PAGE: 25 OF 31
REV. 3/2010