Appendix B –
Geotechnical Report

Geotechnical Investigation Report
Swan Lake Facility Improvements
Kotzebue, Alaska

Prepared for

City of Kotzebue

June 2011

Prepared by

URS Corporation
URS Job #26220926

June 14, 2011

Mr. Derek J. Martin
Capital Projects Manager
City of Kotzebue
PO Box 46
258 Third Avenue
Kotzebue, AK 99752

Re: Geotechnical Investigation Report
Swan Lake Facility Improvement
City of Kotzebue
Kotzebue, Alaska
URS Job No: 26220926

Dear Mr. Martin:

URS is pleased to submit our Geotechnical Investigation Report for the proposed Swan Lake Facility Improvement project located in Kotzebue, Alaska. We performed our work in general accordance with URS' Proposal for Geotechnical Engineering Services, dated February 11, 2011. Written authorization for our services was provided on February 17, 2011.

We appreciate the opportunity to work with you on this project. Please contact us if you have any questions regarding this report.

Respectfully submitted,
URS Corporation

STATE OF ALASKA
49TH
James O. Dabkowski
No. 12208
REGISTERED PROFESSIONAL ENGINEER
EXP 12/31/11

James O. Dabkowski, PE, GE
Senior Geotechnical Engineer
503.948.7232 Direct
jim_dabkowski@urscorp.com

William M. Weyrauch, PE, GE, MBA
Principal Geotechnical Engineer
503.243.3114 Direct
bill_weyrauch@urscorp.com

URS Corporation
111 SW Columbia, Suite 1500
Portland, OR 97201-5850
Tel: 503-222-7200
Fax: 503-222-4292

TABLE OF CONTENTS

Page

TABLE OF CONTENTS I

LIST OF TABLES III

LIST OF FIGURES III

LIST OF APPENDICES III

1.0 INTRODUCTION 1-1
- 1.1 PROJECT INFORMATION 1-1
- 1.2 SCOPE OF WORK 1-2

2.0 SITE DESCRIPTION 2-1
- 2.1 SITE GEOLOGY 2-1
- 2.2 SITE SURFACE CONDITIONS 2-1
- 2.3 SITE SUBSURFACE CONDITIONS 2-2
  - 2.3.1 URS Subsurface Exploration 2-2
  - 2.3.2 Subsurface Investigations by Others 2-4
  - 2.3.3 Subsurface Materials 2-4
  - 2.3.4 Groundwater 2-5
  - 2.3.5 Frozen Ground and Permafrost 2-5

3.0 SEISMIC DESIGN 3-1
- 3.1 SEISMICITY AND GROUND MOTION ANALYSIS 3-1
- 3.2 SLOPE INSTABILITY 3-1
- 3.3 LIQUEFACTION 3-3
  - 3.3.1 General Description and Guidance Criteria 3-3
  - 3.3.2 Potential Liquefaction Induced Settlement 3-4
  - 3.3.3 Differential Settlement 3-5
- 3.4 SURFACE RUPTURE 3-5
- 3.5 LATERAL SPREAD 3-6
- 3.6 SEISMICALLY INDUCED LATERAL EARTH PRESSURES 3-6
- 3.7 IBC DESIGN CRITERIA 3-6

4.0 CONCLUSIONS AND RECOMMENDATIONS 4-1
- 4.1 DREDGED AND CUT SLOPES 4-1
  - 4.1.1 Slope Erosion 4-1
  - 4.1.2 Slope Stabilization Alternatives 4-1

4.2 SHEET PILE RETAINING WALLS 4-5
4.2.1 Geotechnical Parameters 4-5
4.2.2 Seasonal Adfreeze in Retained Soils 4-6
4.3 ANCHOR PILES 4-7
4.3.1 Float Module Anchors 4-7
4.3.2 Timber Boarding Float Anchor Pile 4-10
4.4 PILE DRIVING CRITERIA AND HAMMER SIZING 4-13
4.5 SUPPORT FOR SMALL STRUCTURES 4-14
4.6 GRAVEL PARKING AREAS 4-14
4.6.1 Acceptable Subgrade Soils 4-15
4.6.2 Subgrade Evaluation During Construction 4-16
4.6.3 Materials 4-16
4.7 UTILITY AND CULVERTS TRENCHES 4-16
4.7.1 Trench Excavation 4-16
4.7.2 Trench Backfill Material 4-17
4.8 ADDITIONAL DRAINAGE CONSIDERATIONS 4-18

5.0 EARTHWORK AND CONSTRUCTION RECOMMENDATIONS 5-1
5.1 STRIPPING / OVEREXCAVATION 5-1
5.2 SUBGRADE PREPARATION 5-1
5.3 DREDGING 5-2
5.3.1 Hydraulic Dredging 5-2
5.3.2 Clamshell Dredging 5-2
5.3.3 Conventional Excavation 5-3
5.3.4 Placement Location of Dredged Materials 5-3
5.4 EROSION CONTROL DURING CONSTRUCTION 5-3
5.5 SELECT BACKFILL 5-4
5.5.1 On-site Soils 5-4
5.5.2 Imported Granular Fill 5-5
5.5.3 Fill Placed in Water 5-6
5.6 WET WEATHER CONSIDERATIONS 5-6
5.6.1 General Considerations 5-6
5.6.2 Equipment Haul Roads & Staging Areas 5-7

6.0 CONSTRUCTION OBSERVATION 6-1

7.0 LIMITATIONS 7-1

LIST OF TABLES

Table 3-1: Observed Peat Layer 3-2
Table 3-2: Summary of Post-Liquefaction Settlements 3-5
Table 3-3: IBC Spectral Response Acceleration Parameters (2009) 3-7
Table 4-1: Slope Stabilization Alternatives 4-2
Table 4-2: Sheet Pile Retaining Wall Geotechnical Parameters 4-5
Table 4-3: Summary of Float Anchor Lateral Loads and Deflections (30-foot Piles) 4-8
Table 4-4: Summary of Float Anchor Lateral Loads and Deflections (20 and 25-foot Piles) 4-8
Table 4-5: Estimated Ultimate Vertical Capacity (30-foot Piles) 4-9
Table 4-6: Estimated Ultimate Vertical Capacity (25-foot Piles) 4-9
Table 4-7: Estimated Ultimate Vertical Capacity (20-foot Piles) 4-9
Table 4-8: Timber Boarding Float Anchor Pile Lateral Load / Deflection Evaluation 4-10
Table 4-9: Estimated Seasonal Adfreeze Uplift Loads (16-inch Diameter Sleeve Pile) 4-11
Table 4-10: Estimated Ultimate Vertical Capacities (16-inch Diameter Sleeve Pile) 4-11

LIST OF FIGURES

1 Location and Vicinity Map
2 Site Plan
3 Upland Sections
4 Soil Classification Criteria and Terminology

LIST OF APPENDICES

A Exploration Logs
B Laboratory Test Results
C USGS Seismic Parameters
D Liquefaction Calculation and Reports
E Slope Stability Parameters and Results
F Anchor Pile Evaluation Results

1.0 INTRODUCTION

The proposed Swan Lake Facility Improvement project (project) is located within Swan Lake situated in Kotzebue, Alaska. The location of the site is shown on Figure 1 - Location and Vicinity Map. This project is being administered by the City of Kotzebue (City) and includes development of the lake into a small boat harbor with floats, upland parking, and storage for approximately 350 side-tie spaces to moor boats.

1.1 PROJECT INFORMATION

The City of Kotzebue is located approximately 30 miles north of the Arctic Circle in northwestern Alaska. The project site is located on the Baldwin Peninsula in Kotzebue Sound approximately 550 miles northwest of Anchorage and northeast of the Bering Strait. The City desires to develop Swan Lake, a natural basin that is crowded and heavily impacted in summer months by informal launching and mooring around its perimeter, into a small boat harbor with floats and upland parking and storage for boats up to 32-feet in length. These are shallow draft vessels, restricted by river channel depths.

The fleet comprises subsistence fishing and hunting vessels for residents of Kotzebue and the Northwest Arctic Borough (NWAB) communities of Noatak, Noorvik, Kiana and Selawik. The recent completion of a bulkhead by the Alaska Department of Transportation and Public Facilities (ADOT&PF) along historic Shore Avenue has exacerbated the need for moorage in Swan Lake, as approximately 100 boats formerly mooring along the Shore Avenue beach have been displaced. The proposed work includes dredging a deeper channel and marine basin for the installation of floating docks, re-grade shoreline side slopes, increase gravel parking areas, adding additional storage capacity, adding a formal boat launch area, and providing better access and security.

Water access to Swan Lake is made via a narrow channel connecting the southern end of the lake to Kotzebue Lagoon. The channel flows under a low and narrow overpass along Ted Stevens Way. From the lagoon, the ocean is reached via a channel located on the northeastern end of the lagoon. Swan Lake is bound on the west and south by Ted Stevens Way, northwest by Caribou Drive, and northeast by Ptarmigan Way.

1.2 SCOPE OF WORK

The purpose of our work was to explore subsurface conditions at the site in order to provide geotechnical engineering recommendations for design and construction of the small boat harbor and upland storage areas. The upland storage areas are being considered for dredge fill placement and winter storage for boats. Our report includes recommendations for minimum dredged slope gradients, harbor-side slope gradients, and preliminary recommendations for earth retention systems. Our scope of field investigation, laboratory testing, analysis, and reporting included the following:

1. Performing a review of geologic maps and existing geotechnical files for subsurface exploration information at or nearby the site to augment data obtained in the field exploration phase of the project.
2. Preparing a work plan for the field work, including a project-specific Health and Safety Plan (HASP).
3. A field exploration program using drilled borings under the technical direction of a URS representative. Representative samples from the borings were returned to the URS laboratory in Portland, Oregon, for further examination and testing. The locations of these explorations relative to existing site features are shown on Figure 2 – Boring Location and Site Plan.
4. Completing a laboratory test program to assess the pertinent engineering characteristics of the site soils.
5. Developing a soil profile for the boat launch and parking area, and for the channel access between Swan Lake and Kotzebue Lagoon using the subsurface information from nearby previous investigations and the URS' investigation.
6. Performing a slope stability analysis of the channel and ramp slopes to support the dredging and ramp construction.
7. Preparing slope protection recommendations for the channel and lake shore area adjacent to the proposed ramp.
8. Providing an aggregate base pavement design thicknesses for the proposed parking area based on assumed traffic loading and subgrades encountered.
9. Preparing a geotechnical thermal analysis for the proposed ramp and parking area. This analysis includes estimates of long term thaw depths given the proposed development.
10. Preparing mitigation recommendations to prevent damage to the permafrost due to the proposed ramp and parking area development.
11. Evaluating float module anchor piles for resistance to lateral loads and a single timber boarding float anchor pile for both lateral loads and loads due to adfreeze jacking in the active freeze zone.

12. Determining appropriate seismic design parameters base on the 2009 International Building Code (IBC) requirements. These parameters were also used in developing design values for liquefaction evaluation and estimating lateral loads on retaining walls due to seismic forces.
13. Developing recommendations pertaining to earthwork at the site. This includes recommendations for site preparation, dredging, overexcavation requirements, construction sequencing, wet weather and cold weather earthwork, temporary excavations, and drainage control, as applicable.
14. Developing recommendations for suitability of on-site soils for use as structural fill and compaction criteria.
15. Preparing a geotechnical report which summarizes the field observations and data, presents laboratory test results, and discusses the foundation and earthwork recommendations outlined above. The report is stamped by a Professional Engineer registered in the State of Alaska.
16. Submitting three copies of the draft geotechnical report to the City.

2.0 SITE DESCRIPTION

2.1 SITE GEOLOGY

Available geological mapping of the area[1] indicates that the surficial geology of the Upper Baldwin Peninsula is comprised of variable marine, estuarine, glaciomarine and glacial sediments (Hamilton, 1994; and Krause, 1985), over mid to late Tertiary sandstone, conglomerate and shale, early Tertiary volcanic rock, and Pre-Tertiary metamorphic rock (Decker et al., 1988; and Kirschner, 1994). The depth of unconsolidated surficial deposits is unknown but may extend to several hundred feet. The surficial geology of the Upper Baldwin Peninsula can be generalized as ice-rich, eolian and reworked silt or organic-rich lacustrine silt deposits, overlying variable glacio-fluvial materials, overlying a terminal moraine deposit (till) formed of marine sediments pushed up by glaciers that had advanced from the east (Hamilton, 1994; and Huston et al., 1990)[2].

2.2 SITE SURFACE CONDITIONS

Swan Lake is located on the eastern side of Kotzebue. An existing bridge crosses the channel south of Swan Lake separating it from Kotzebue Lagoon. The banks along the channel and lake are gently sloped at gradients of 6 horizontal to 1 vertical (6H:1V) or flatter in most areas. During our field investigation 1.5 to 8.5 feet of snow and ice covered the area. The site photos below show the site conditions during the time of our exploration.

---

[1] Stern, R.O., 1982, Cultural resources survey of the Kotzebue Third Avenue street project, Kotzebue: Alaska Division of Geological & Geophysical Surveys Public Data File 84-36, 73 p.

[2] Krause, K.J., 1985, Resource information - northwest Alaska area land-use plan, engineering geology: Alaska Division of Geological & Geophysical Surveys Public Data File 85-42A, 8 p., 25 sheets, scale 1:63,360.

Photo 1. Looking West	**Photo 2.** Looking Southwest

Photo 3. Looking South	**Photo 4.** Looking East

2.3 SITE SUBSURFACE CONDITIONS

2.3.1 URS Subsurface Exploration

Ten borings were advanced to assess the subsurface site conditions. The locations of these borings are shown on Figure 2. The explorations were approximately located in the field by marking off distances from existing site features shown on the Site Plan and located using a hand-held GPS device to obtain the approximate latitude and longitude.

The field work for this investigation was performed between March 28 and April 1, 2011. A member of URS' staff visually logged and classified the subsurface materials encountered within the borings in general accordance with the Unified Soil Classification System (USCS), and collected representative samples of the materials encountered. We have provided an explanation of the USCS - Soil Classification Criteria and Terminology, Figure 3. Samples were collected in quart-size sealed bags, and labeled indicating location, date, and depth of sample. URS' laboratory staff visually examined all samples returned to our laboratory in order to refine the field classifications. Logs of the borings are presented in Appendix A. Results of the moisture content tests are shown on the logs. Results of other laboratory tests are included in Appendix B. The following subsections describe specific exploration procedures used.

Ten Standard Penetration Test (SPT) soil borings (URS-01-11 through URS-10-11) were advanced at the site from March 28, 2011 through April 1, 2011 by hollow-stem method to depths ranging from 8 feet to 70 feet below ground surface (bgs). The site was snow-covered and the lake was frozen during our field explorations. Snow and ice thicknesses ranged from 0 to 8.5 feet thick. Soil samples were taken from the boreholes at 2.5-foot intervals to a depth of approximately 10 feet bgs. Subsequently the soil samples were taken every 5 feet. The borings were performed using a Dietrich D40 skid rig provided and operated by personnel from Denali Drilling Inc. with a 4¼-inch hollow stem auger in 5-foot sections. Upon completion, the SPT boreholes were backfilled with soil cuttings.

The SPT is performed by driving a 2-inch, outside-diameter, split-spoon sampler into the undisturbed formation located at the bottom of the advanced probe with repeated blows of a 140-pound, pin-guided, manual hammer falling a vertical distance of 30 inches. The number of blows, N-Value, required to drive the sampler 1-foot, the last 12 inches of an 18-inch sample interval, is used for unfrozen soils to measure the soil consistency (cohesive soil), or relative density (non-cohesive soils).

Frozen soils were encountered to varying depths in the borings taken on land. The SPT N-Values obtained when sampling frozen soils are not considered representative of the thawed density or consistency of the materials encountered. Caution should be used in evaluating the soils encountered, giving particular consideration to indications of frozen materials.

2.3.2 Subsurface Investigations by Others

A subsurface investigation for the raw water pipeline bridge which crosses the slough entering the eastern end of Swan Lake was completed by Crowther Associates in February 1995. Five borings (1 through 5) were advanced between the southern and northern edges of the slough at approximately the locations as shown on Figure 2. Borings were advanced to between 7 and 20 feet bgs using a Texoma highway auger rig with an 18-inch diameter bit. Borings were advanced until sloughing occurred and the hole collapsed. Soils encountered in those borings consisted mainly of silt, with ice observed above the silts in borings 2 through 4. Boring logs can be found in Appendix A.

An additional investigation was performed by the Larson Consulting Group in 2008 for the replacement of the raw water pipeline from Vortac Lake to the WTP building. Eleven borings were completed from Vortac Lake to the pipeline bridge, three of which are shown on Figure 2. Boring logs and descriptions for these investigations can be found in Appendix A. Laboratory testing results can be found in Appendix B.

2.3.3 Subsurface Materials

Marine, lacustrine, and alluvial silt and fine sand deposits were encountered below the snow and ice in all borings. Limited thicknesses of gravel were encountered at the ground surface in several boring locations, and gravel was noted within the finer-grained sand and silt in some areas. Although gravel was observed, the site is not characterized as having significant gravel deposits. From a geotechnical perspective, it is primarily characterized as consisting of deposits of silt, fine sand, and mixtures thereof.

Of geotechnical significance from a slope stability perspective, distinct layers of peat, ranging from about 4 inches thick (URS-01-11 and URS-05-11) to as much as 5 feet thick (URS-09-11) were also encountered in several of the borings. Frozen soils were not encountered at all locations but were encountered to depths of up to about 49 feet bgs at boring URS-08-11. Soils within and immediately adjacent to the lake were observed to contain minimal, if any, frozen material, indicating that the thaw bulb of the lake has restricted the seasonal freezing of these soils. Based on previous soil investigations conducted in the Kotzebue area URS believes that frozen soils deposits may extend to a minimum of 100 feet bgs and perhaps even deeper.

The subsurface materials are described in detail on the attached boring logs in Appendix A.

2.3.4 Groundwater

To determine approximate regional groundwater levels in the area, we researched well logs available at the Alaska Department of Natural Resources[3] website for wells located within Section 3, Township 17 North, and Range 18 West of the Kateel River meridian. However, this source did not provide any well logs associated with the Kotzebue area.

Previous geotechnical investigations by others encountered groundwater between 3 and 5.5 feet bgs. The surface elevation of the lake is considered a good indicator of groundwater levels in the immediate area. It should be recognized that the groundwater surface (phreatic surface) is expected to rise away from the lake, generally following surface topography. Based on previous reports by others and our understanding of the site surface conditions surrounding the lake, we recommend that groundwater be considered at a depth of not more than 4 feet from the surface in the vicinity of the lake. Groundwater levels should also be expected to fluctuate due to seasonal and annual variations in precipitation, changes in site utilization, tidal influences, and other factors. Storm surge water levels have been estimated to be 6 to 8 above MLLW. Due to frozen ground conditions during our investigation, accurate groundwater levels within the land-based borings could not be determined.

2.3.5 Frozen Ground and Permafrost

Although the lake bottom was not observed to be frozen when the borings were completed, and the depth of frozen soils was limited in borings immediate adjacent to the lake, frozen soils were noted to substantial depths in the borings located in the potential upland storage areas. Due to the silty nature of the soils generally encountered on this site and the peat layers observed, site soils, when thawed, are considered highly frost susceptible.

Although the depth of permafrost varies across the state and regionally, permafrost depths upwards of 2,000 feet are known to exist. Based on the results of our explorations and the presence of the Swan Lake, we interpret the frozen soils encountered in the immediate vicinity of the lake to be discontinuous areas of permafrost. We estimate the seasonal active layer to be between 5 and 10 feet bgs, depending on the seasonal temperatures and soil conditions. Soils below that depth likely remain frozen most years, however during extended periods of warmer weather, inundation with surface water, or deeper seasonal freezing and thawing may occur.

[3] Water well log information obtained from the Alaska Department of Natural Resources website, http://www.navmaps.alaska.gov/welts

The non-frozen soils below and immediately adjacent to Swan Lake are likely influenced by a thaw bulb created by Swan Lake. Thaw bulbs occur when warmer surface conditions exist above frozen soils for extended periods of time, inhibiting the refreezing of the soils. Lakes, especially ones that do not freeze completely, and manmade structures are typical causes for thaw bulbs.

3.0 SEISMIC DESIGN

This section of the report discusses the potential for, and design considerations resulting from, specific seismic hazards such as slope instability, liquefaction, settlement, surface displacement, and seismically induced lateral earth pressures in accordance with the 2009 IBC, Sections 1803.5.11 and 1803.5.12.

3.1 SEISMICITY AND GROUND MOTION ANALYSIS

There are no regularly occupied buildings or bridge structures planned for this project. Accordingly, a seismic event recurrence potential of 10 percent in 50 years (recurrence interval of 475 years) was used to determine the event magnitudes for our evaluation[4]. For this recurrence potential, a mean seismic event magnitude M5.9 was indicated. A peak seismic event magnitude of M7.3 was indicated for this recurrence interval. Longer recurrence intervals and greater magnitude events can be evaluated if requested.

Analysis of the soil types and average soil consistencies encountered in the borings indicate that the site should be defined as a 2009 IBC Site Class D. IBC seismic site coefficients and design parameters are defined and provided in Section 3.7 below. Quantitative liquefaction evaluation, as described in Section 3.3.2, considers the site-specific soil profile, the design level Peak Ground Acceleration (PGA), and the seismic event magnitude. The PGA is determined from the short period (0.2 second) design spectral response acceleration (S_{DS}). Please refer to the following sections and Appendix C for additional details.

3.2 SLOPE INSTABILITY

Due to the relatively limited planned changes in site grades and the anticipated relatively gentle gradients of cut slopes (4H:1V to 6H:1V), the risk of seismically induced slope instability at the site is considered negligible except in areas underlain by near surface by peat soils, and then only during warmer weather periods when the peat soils have thawed.

[4] United States Geological Survey, 2008. 2009 IBC Design Parameters determined using:, "Seismic Design Values for Buildings - Ground Motion Parameter Calculator - Version 5.1.0," from the USGS website

The seismic stability was analyzed by a pseudo-static approach, in which the effect of seismic loading was represented by constant horizontal and vertical seismic coefficients. The seismic coefficients were selected as a fraction of the peak ground accelerations corresponding to the seismic hazard to represent the inertial forces resulting from horizontal and vertical accelerations caused by the design earthquake.

The prevailing practice for pseudo-static stability analyses is based on studies that show that earth dams with a pseudo-static factor of safety (FS) greater than 1.0, obtained by using a seismic lateral force with 50% of the PGA, will not develop large deformations (Hynes-Griffin et. al, 1984; Kramer, 1996).

Based on the standard of practice for pseudo-static stability analysis, the seismic coefficient for the existing embankment seismic analysis was taken as 50% of the surface PGA value. For this analysis, static strength was used.

Due to the generally low strength and earthquake sensitivity of peat when it is not frozen, overlying soils may settle and/or move laterally on sloping ground. This is a potential concern for slopes in the area of the channel. Near-surface peat layers about 1-foot thick were noted in borings URS-06-11, URS-07-11, and URS-09-11 as shown in Table 3-1.

Table 3-1: Observed Peat Layer

Borehole	Elevation (MSL)
URS-06-11	-5½ to -6½
URS-07-11	-14 to -14½
URS-09-11	-1½ to -2½

Since a continuous layer of peat was not encountered at the same elevation in all the borings in this area, the peat is considered discontinuous. The apparent discontinuity tends to reduce the potential for large scale slope instability in the immediate area. Although peat was seen mixed with some of the cuttings returned from elevations -5 to -7 MSL in boring URS-02-11, a distinct peat layer was not observed. Peat may be encountered as part of the planned dredging operations.

3.3 LIQUEFACTION

3.3.1 General Description and Guidance Criteria

In general, liquefaction occurs when deposits of unfrozen, loose, saturated soils, generally sands, sand-silt mixtures, and soft to medium stiff, non-plastic silts, are subjected to strong earthquake shaking. If these deposits cannot drain rapidly, there will be an increase in the pore water pressure. With increasing oscillation, the pore water pressure can increase to the value of the overburden pressure. The shear strength of a cohesionless soil is directly proportional to the effective stress, which is equal to the difference between the overburden pressure and the pore water pressure. When the pore water pressure increases to the value of the overburden pressure, the shear strength of the soil reduces to zero, and the soil deposit turns into a liquefied state. However, soil shear strength decreases in proportion to the buildup of excess pore pressures so that soil instability, particularly on or near sloping ground, can occur without complete liquefaction. Generation of excess pore pressures and liquefaction does not occur in frozen soils.

The following parameters were used in our analyses to designate non-liquefiable, fine-grained soils (in accordance with Bray and Sancio, 2006):

- Plasticity index greater than 18 percent.
- Water content less than 80 percent of the liquid limit.

The susceptibility of sands, gravels, and sand-gravel mixtures to liquefaction is typically assessed based on relative density. Due to the non-plastic nature of the silts encountered, they are considered susceptible to liquefaction depending on their consistency as indicated by the SPT N-values.

3.3.2 Potential Liquefaction Induced Settlement

Based on the soils and groundwater levels encountered, the site is considered susceptible to varying magnitudes of potential liquefaction induced settlement. Using the commercially available analysis software program LiquefyPro by CivilTech Software, we analyzed the potential liquefaction induced settlement at the site. For the bulk of our analysis we assumed a groundwater depth of ½-foot below the profiled ground surface. A limited analysis was also completed with inundation of the ground surface to elevation 6 MSL. Using the assumed groundwater depth, results of laboratory tests for fines content, and design level Peak Ground Acceleration (PGA) of 0.167[5], we assessed the potential liquefaction induced settlement for two earthquake magnitudes. A magnitude M6 event, slightly larger than the M5.9 mean event value for the 10 percent in 50 years recurrence potential, was used to represent a moderate level earthquake. A magnitude M7.5, slightly larger than the maximum event value of M7.3, was used to represent a severe earthquake. Estimated total liquefaction induced settlement was calculated based on two soil profiles.

The first profile used soil data from boring URS-03-11 which does not indicate the presence of peat soils. The second profile consisted of an idealized composite of soils encountered in borings URS-05-11, URS-06-11, URS-07-11, URS-09-11, and URS-10-11 in and/or near the channel, some of which indicated the presence of peat. These soil profiles were evaluated using two analytical methods[6]. Of necessity, due to frozen soil conditions at the time of our exploration, assumptions were made regarding the relative density, consistency, and unit weight of frozen soils in order to evaluate the potential for liquefaction induced settlement under thawed conditions. The details of the parameters used in the analysis and a graphical representation of the results are included in Appendix D. The results of our calculations are summarized in Table 3-2.

[5] For our analysis, PGA = (S_{DS} / 2.5), where S_{DS} is defined as the design short period spectral acceleration. For this site, S_{DS} = 0.416 as indicated in Section 3.7 below.

[6] Ishihara/Yoshmine (92) and Tokimatsu/Seed (87)

Table 3-2: Summary of Post-Liquefaction Settlements

Boring	Boring Location	Post-Liquefaction Settlement (inches)			
		2005 ASCE 7 Standard (M6, 0.16g)		2005 ASCE 7 Standard (M7.5, 0.16g)	
		Ishihara/ Yoshmine (92)	Tokimatsu/ Seed (87)	Ishihara/ Yoshmine (92)	Tokimatsu/ Seed (87)
URS-03-11	Northwest portion of site	0.05”	0.15” (1.12”)[1]	0.97”	0.15”
Composite[2]	Channel	0.90”	1.80” (2.71”)[1]	3.21”	1.80”

[1] higher value calculated based on storm surge water level of 6 feet above MLLW
[2] composite of borings URS-05-11,URS-06-11, URS-07-11, URS-09-11, and URS-10-11 reflects presence of peat soils

3.3.3 Differential Settlement

Differential settlement over relatively short distances (e.g., 30 to 50 feet), due to liquefaction may be considered to be 50 percent to 75 percent of the indicated total settlement shown in Table 3-2 above. Due to the nature of the planned facility improvements, which do not include large occupied structures, large paved areas, or bridges, differential settlement is not considered a significant issue for this site development.

3.4 SURFACE RUPTURE

Although the site is situated in a region of the country known for seismic activity, no known faults exist on or immediately adjacent to the site[7]. Therefore, the risk of surface rupture at the site due to faulting or lateral spread is considered low.

[7] Neotectonic Map of Alaska: G. Plafker, L.M. Gilpin, and J.C. Lahr - U.S. Geological Survey National Atlas, 1970

3.5 LATERAL SPREAD

Another form of surface rupture termed lateral spread can occur on sites where near-surface liquefaction occurs consistently across a large area adjacent to a vertical free-face, or when the ground surface of this large area is gently sloping. Such site conditions frequently occur along waterfront facilities adjacent to river channels or open bodies of water. These conditions exist at this site. Accordingly, the risk of lateral spread due to seismic activity at the site is considered moderate to high. Typical mitigation measures consist of making the liquefiable soils denser through dynamic compaction, or performing ground improvement such as installing geopiers™ or stone columns. Although the risk of lateral spread is moderate to high, the high cost to mitigate the site is not warranted.

3.6 SEISMICALLY INDUCED LATERAL EARTH PRESSURES

Based on the planned development of sheet pile walls in the northwest portion of the site, seismically induced lateral earth pressure coefficients for the soils retained by the sheet pile walls are presented in Table 4-2 of this report.

3.7 IBC DESIGN CRITERIA

Based on the results of our subsurface explorations and analyses, we have assumed a Site Class D for the subsurface conditions encountered. Detailed information determined using the 2009 IBC design criteria and the United States Geological Survey (USGS) Seismic Design Values for Buildings - Ground Motion Parameter Calculator[8] is included in Appendix C. The following parameters are recommended:

[8] United States Geological Survey, 2008. 2009 IBC Design Parameters determined using:, "Seismic Design Values for Buildings - Ground Motion Parameter Calculator - Version 5.1.0," from the USGS website *http://earthquake.usgs.gov*.

Table 3-3: IBC Spectral Response Acceleration Parameters (2009)

IBC Parameter Description	IBC Parameter Symbol	IBC Parameter Value
0.2-second (short period) spectral response acceleration	S_S	0.428
1-second spectral response acceleration	S_1	0.129
Short period site coefficient based on defined site class	F_a	1.458
1-second period site coefficient based on defined site class	F_v	2.284
Maximum considered spectral response acceleration for short periods	S_{MS}	0.623
Maximum considered spectral response acceleration for 1-second periods	S_{M1}	0.294
Design spectral response acceleration for short periods	S_{DS}	0.416
Design spectral response acceleration for 1-second periods	S_{D1}	0.196
Defined Site Class	Site Class	D

Notes:
1. Design Peak Ground Acceleration (PGA) is taken as SDS/2.5.
2. For a recurrance potential of 10% in 50 years, mean and maximum earthquake magnitudes of M5.7 and M7.3 were determined for this site.

4.0 CONCLUSIONS AND RECOMMENDATIONS

Based on the results of our field explorations and analyses, the site may be developed as described in Section 1.1 Project Information provided the considerations and recommendations contained in this report are incorporated into the design and development.

4.1 DREDGED AND CUT SLOPES

Stability analysis indicates that the mineral soils (silt, sands, and scattered gravels) encountered may be dredged or graded to slopes with maximum gradients of 4H:1V with appropriate factors of safety for both static and dynamic (seismic) conditions. Acceptable factors of safety are indicated provided highly organic soil layers (e.g. peat) are not present in the cut slope or for a depth of about "H" below the toe of the slope, where "H" is the height of the slope. Peat layers (up to about 1-foot thick encountered in borings near the channel) represent soft and weak zones that result in substantially reduced and generally unacceptable factors of safety against slope instability. The risk of slope instability where peat soils are encountered may be mitigated by overexcavation to remove them and either backfilling with appropriate granular fill or by adjusting the slope profile. Recommendations for slope stabilization alternatives around the entire lake will be provided on the design drawings. Channel stabilization alternatives are recommended below in Section 4.1.1.

4.1.1 Slope Erosion

Storm surges within the basin are estimated to be 6 to 8 feet above MLLW. Additionally, wave action from boats and wind will likely cause erosion of unprotected banks. Slopes shallower than 6H:1V were observed within the basin, with some areas approaching 10H:1V were erosion was evident. Literature depicting curves plotted using material grain size versus the angle of repose of this material in an ocean beach environment showed slopes of 15H:1V to 20H:1V for the materials encountered in the borings. Given the more protected nature of this basin and the seasonal use of it, URS estimates that unprotected slopes may approach 10H:1V over time due to erosion. To increase the slope angles within the basin, mitigation measures as discussed in Table 4.1 are recommended.

4.1.2 Slope Stabilization Alternatives

Construction of the cut slopes within the channel separating Swan Lake from Kotzebue Lagoon will require reinforcement to maintain long-term stability. Tidal flow and boat wake over time

will erode the slopes and require regular channel maintenance to maintain the required freeboard depths. Several alternatives are discussed in Table 4-1.

Table 4-1: Slope Stabilization Alternatives

Alternative	Pros	Cons
Steel Sheet Pile – install sheet pile using excavator-mounted equipment to nominal depths. http://www.cmiengineer.com/product-engineering.php	• Holds up well to freeze/thaw, wave action, and boat impacts. • No excavation required to install sheets. • Can be installed with excavator-mounted equipment. • Limited impact to existing shoreline. • Can maximize upland area use.	• Material costs and costs to import sheet pile. • Mobilization of excavator-mounted equipment. • If dense soils are encountered, heavier installation equipment and heavier gauge sheet pile may be required.
Geosynthetic Wrapped Face MSE Wall – install imported geosynthetic using on-site sand material as backfill. Anchor geotextile back into slope.	• Can be installed with local backfill materials. • Lowest cost of imported materials. • Can be installed with local labor.	• Requires large area behind edge of channel to install geosynthetic. • Can be damaged by boat impacts. • Typically vegetated or buffered with riprap for impact protection. • Cost to import geosynthetic material.
EcoTube/GeoTube – roll out EcoTube product onto prepared soil bench. Fill EcoTube with dredged soils. Water will exit tube via permeable walls until equilibrium is reached. http://www.usfabricsinc.com/products/ecotube-sludge-dewatering-tubes http://www.tencate.com/8129/TenCate/TenCate-Industrial-Fabrics/Region-Europe/en/en-Industrial-Fabrics/Markets--Products/Marine-Structures/TenCate-Geotube-Geocontainment-Technology	• Use dredge material to fill tubes. • Filled tubes form large, stable mass that provides slope protection. • Easy to install. • Additional tubes can be stacked on top or adjacent to existing tubes. • Flexible. • Suitable for freeze/thaw environment. • Can be strapped together.	• Can be damaged by boat impacts. Additional layer of polyester protection recommended for impact, UV, and ice protection. • May be difficult to construct first lift if below water surface elevation. • Material cost and cost to import. • Additional scour protection may be required depending on elevation of first lift. • May require large equipment to position

		tubes (e.g. crane with a spreader bar).
Concrete Bags – Premanufactured bags placed and filled with a pumped, flowable concrete to create a battered slope or wall. http://www.fabriform1.com/images/FabriformBagsBrochure.pdf	• Easy to install. • Custom sizing. • Can be placed by hand or with small equipment. • Can be staked and/or reinforced in place to provide additional stability. • Provides stable erosion control. • May match existing slope protection of bridge abutments.	• Cost of importing and pumping (placement) of concrete.
Modular Block Wall – Imported, stackable concrete blocks. http://www.ultrablock.com/	• Stackable. • Premanufactured. • Concrete is resistant to freeze/thaw.	• High costs to import blocks. • May need to be tied back for stability (with geogrid). • Ice within block joints may cause instability.
Cellular Confinement System – Honeycomb geosynthetic product installed with native materials, gravel, or concrete within open cells. http://www.geogrid.com/	• Easy to install. • Can backfill with native materials. • Can be placed horizontally and stepped or on top of some slopes.	• Import cost and cost of geosynthetic material. • Wave/tidal/scour impacts may require additional erosion protection of material placed within cells (e.g., use of concrete or aggregate). • Additional costs for aggregate or concrete for erosion protection.
Surficial Slope Stabilization – Grade existing slopes to 6H:1V, place geotextile and armor with riprap or prefabricated erosion protection devices (e.g., articulated concrete blocks) .	• Conventional design approach. • Can use local contractors/equipment/ labor. • Provides protected and stabilized slope. • Slopes of up to 6H:1V possible.	• High cost of importing riprap and geotextile.

Graded Slope – Grade existing slopes to 6H:1V . Provide regular maintenance.	• No imported material required. • Can use local contractors/equipment/ labor. • Low construction cost.	• Requires large area to lay back slopes. • If not sufficient City-owned land, additional cost of land purchase may be required. • Impacts existing upland infrastructure. • Wave erosion a concern. • Does not limit transient boat parking. • May need to provide maintenance dredging of channel to maintain passage.
No Stabilization – Dredge channel but do not lay back slopes.	• Cheapest initial cost.	• Frequent maintenance dredging of channel required to maintain passage. • Inability to dredge may limit boat passage.

The public workshops have identified the frequent use of small boats with large motors producing significant wakes when traveling in and out of the basin. Also of concern were the continued use of the banks around the ball field and other sections of the basin for boat storage which may continue to degrade the conditions of this slope. Given our observations of the near shore and lake sediments, the need to widen and maintain access through the narrow opening under the bridge and through the channel, and the steep slopes that may be constructed, a mechanically stabilized bank is recommended.

4.2 SHEET PILE RETAINING WALLS

At this time, we anticipate a sheet pile retaining wall will be placed in the Heavy Load-out Area, near boring URS-03-11. Preliminary sheet pile recommendations specify a cantilevered AZ 28 section steel sheet pile (SSP) wall approximately 36 feet in length extending 23 feet below the mudline. Based on subsurface materials encountered at this boring location, we expect that the SSP will be driven into, and receive their support from, unfrozen soils below the seasonal frost depth. Based on the subsurface conditions encountered, the sheet pile wall may be constructed using conventional materials and installation methods. Due to the local climate and frost susceptible nature of most of the materials encountered on the site, mitigation of seasonal adfreeze pile jacking loads will be important, and is addressed below in Section 4.2.2.

4.2.1 Geotechnical Parameters

The following geotechnical parameters are provided for design.

Table 4-2: Sheet Pile Retaining Wall Geotechnical Parameters[1]

Depth (feet)	Soil (USCS)	Average SPT N-Value	Moist Unit Weight (pcf)	Saturated Unit Weight (pcf)	Phi[2]	k_{ah}[3]	k_{ph}[4]	k_{AE}[5]
0-8	GP-GM	15[6]	130	135	36	0.25	3.85	0.26
8-20	SM	22	120	125	32	0.25	3.25	0.27
20-30	ML[7]	11	110	115	28	0.36	2.77	n/a
30-41.5	ML[7]	28	115	120	28	0.36	2.77	n/a

[1] based on boring URS-03-11
[2] internal friction angle (degrees)
[3] horizontal component of active lateral earth pressure coefficient
[4] horizontal component of passive lateral earth pressure coefficient
[5] active lateral earthquake pressure coefficient (FHWA "Design Guidance: Geotechnical Earthquake Engineering for Highways, Volume I - Design Principles")
[6] assumed value, soil layer frozen when sampled
[7] the silt soils encountered onsite are considered non-plastic. Accordingly, we recommend cohesion C = 0

4.2.2 Seasonal Adfreeze in Retained Soils

In addition to lateral soil loads, the SSP wall will also be subjected to vertical uplift forces associated with seasonal adfreeze of the retained soils. The silts and silty sand soils encountered on this site are considered highly frost-susceptible. Frozen soils were noted to a depth of 10.5 feet bgs at boring URS-03-11 which was located away from the shoreline. Seasonal freeze depths vary by location and seasonal weather conditions but should be expected to be on the order of 5 feet in silty materials, and up to 10 feet in granular materials. In order to limit seasonal adfreeze jacking loads on the sheet piles: the frost heave susceptibility of the soils in contact with the sheet piles may be reduced by removing and replacing the silty soils with NFS soils; a bond breaker may be applied to limit adherence of freezing materials to the piles; or a combination thereof. These approaches are discussed in the following paragraphs and in Section 4.3.2.2, below.

At a minimum, we recommend that NFS fill be placed behind the wall. Suitable NFS materials include coarse, granular materials such as gravel or coarse sand having less than 5 percent material passing the U.S. Standard No. 200 Sieve and preferably having less than 10 percent passing the U.S. Standard No. 40 Sieve. The intent is that the material be very free-draining and contain sufficient voids to accept freezing water with limited or no volume expansion. The NFS material should be well-compacted, should extend a minimum distance of 3 feet behind the wall, and should extend below the seasonal freeze depth. A minimum depth of 10 feet below finished grade is recommended. In order to limit migration of fine-particles into the NFS material voids, a geotextile separation fabric should be placed between the existing soils and the newly placed NFS material.

To further reduce the potential for seasonal adfreeze jacking, the bond between the sheet pile and the retained soils may be broken using a variety of materials. In essence, a low adhesion agent is applied to the sheet pile, and then a protective cover (e.g. sheeting) is placed between the low adhesion agent and the NFS material. Alternatively, the embedment depth of the sheet pile can be sufficiently extended to resist frost jacking loads. Pile embedment depths of three to four times the thickness of the frost-susceptible soils are typically recommended, although this may not be the most cost-effective solution.

Adfreeze characteristics of soils may be estimated based on the soil type and normal winter temperature. Based on the soils encountered, without mitigation, adfreeze jacking stress is

estimated at 50 psi[9]. Depending on the type of bond breaker and NSF material employed, using both approaches to mitigation, adfreeze jacking stress may be reduced to about 10 psi.

4.3 ANCHOR PILES

We understand that the float modules and the timber boarding float will be anchored with driven steel pipe piles. Piles can be vibrated to depth using conventional equipment. Analysis for each type of anchor is provided below.

4.3.1 Float Module Anchors

Pipe piles (12.75-inch and 14-inch diameter) driven 30 feet into the lake bed are planned at this time for the float module anchors. Pipe pile wall thicknesses of 0.172-inch, 0.375-inch and 0.500-inch were evaluated.

Lateral loads are expected to vary from 6 to 12 kips, and will be applied through chains attached to the top of the anchor piles. Lateral loads may be applied at angles ranging from 0 to 20 degrees from the horizontal. Free head conditions were assumed for the application of lateral load 1-foot above the mudline. Using the commercially available analysis software program AllPile v7.2d by CivilTech Software, pile capacities and lateral deflections were estimated. For our analysis, we assumed soil conditions as encountered at boring URS-10-11, and evaluated the full range of indicated loads on 30-foot long piles driven to 29 feet below the mudline. Based on the results of our lateral load analysis of the 30-foot long piles, we evaluated 25-foot and 20-foot long piles driven to leave 1-foot above the mudline. Identical lateral deflections were indicated for the shorter pile lengths and these were essentially identical to the deflections estimated for the 30-foot long pile. Based on our evaluation, the estimated lateral deflection is dependent on the structural properties of the pile and soil properties adjacent to the upper 10 to 12 feet of the pile. Due to the inherent uncertainty and variability of soils at the surface of the lake bed we do not recommend use of anchor piles less than 20 feet long. Details of our evaluation are presented in Appendix F and are summarized in Tables 4-3 and Table 4-4 below.

[9] Sanger, F., "Foundations of Structures in Cold Regions", U.S. Army Cold Regions Research and Engineering Laboratory Monograph, III-C4, Hanover, N.H. 1969, [Cold Regions Engineering – University of Washington]

Table 4-3: Summary of Float Anchor Lateral Loads and Deflections[1] (30-foot Piles)

Chain Load (kips)	Degree[2]	14" x 30' 0.172" wall ΔY"[3] (horizontal)	14" x 30' 0.375" wall ΔY"[3] (horizontal)	14" x 30' 0.500" wall ΔY"[3] (horizontal)	12.75" x 30' 0.375" wall ΔY"[3] (horizontal)	12.75' x 30' 0.500" wall ΔY"[3] (horizontal)
12	0	1.22	0.55	0.43	0.67	0.55
12	20	1.11	0.5	0.4	0.62	0.51
10	0	0.93	0.42	0.33	0.52	0.43
10	20	0.85	0.38	0.30	0.48	0.39
8	0	0.67	0.30	0.24	0.38	0.31
8	20	0.61	0.27	0.22	0.34	0.28
6	0	0.43	0.19	0.15	0.25	0.20
6	20	0.39	0.18	0.14	0.22	0.18

[1] 1-inch is the default maximum allowable lateral deflection in the AllPile software. Other software (e.g. LPile) has default values up to 100-inches. Actual maximum allowable lateral deflections are project-specific and/or structure-specific and depend on design and performance aspects beyond the pile and soil materials.
[2] Angle of load application measured from the horizontal.
[3] Lateral mudline deflections, in inches.

Table 4-4: Summary of Float Anchor Lateral Loads and Deflections[1] (20 and 25-foot Piles)

Chain Load (kips)	Degree[2]	14" x 20'& 25' 0.375" wall ΔY"[3] (horizontal)	14" x 20'& 25' 0.500" wall ΔY"[3] (horizontal)	12.75"x20'&25' 0.375" wall ΔY"[3] (horizontal)	12.75' x20'&25' 0.500" wall ΔY"[3] (horizontal)
12	0	0.55	0.44	0.68	0.55
12	20	0.50	0.40	0.62	0.51

[1] A maximum allowable lateral deflection of 1-inch is the software default. The actual tolerance is project specific and depends on other design and performance requirements.
[2] Angle of load application measured from the horizontal.
[3] Lateral mudline deflections, in inches.

Although vertical loads on these anchors are expected to be minimal, ultimate vertical pile capacities were estimated for the various pile sizes and lengths. Estimated ultimate downward and upward capacities of the piles are summarized in Tables 4-5 through Table 4-7 below.

Table 4-5: Estimated Ultimate Vertical Capacity (30-foot Piles)

Direction	14"x 30' 0.172" wall	14"x 30' 0.375" wall	14"x 30' 0.500" wall	12.75” x 30' 0.375" wall	12.75" x 30' 0.500" wall
Downward (kips)	64	79	82	69	71
Upward (kips)	30	35	36	31	32

Table 4-6: Estimated Ultimate Vertical Capacity (25-foot Piles)

Direction	14"x 25' 0.375" wall	14"x 25' 0.500" wall	12.75” x 25' 0.375" wall	12.75" x 25' 0.500" wall
Downward (kips)	58	61	52	54
Upward (kips)	25	26	23	23

Table 4-7: Estimated Ultimate Vertical Capacity (20-foot Piles)

Direction	14"x 20' 0.375" wall	14"x 20' 0.500" wall	12.75” x 20' 0.375" wall	12.75" x 20' 0.500" wall
Downward (kips)	38	41	34	37
Upward (kips)	16	16	14	15

4.3.2 Timber Boarding Float Anchor Pile

The Timber Boarding Float anchor pile will accommodate fluctuating water levels in the lake. The current design includes a single 35-foot long, 16-inch diameter, 0.500 inch wall thickness, closed-end pipe pile with a top elevation flush with the top of the concrete launch ramp. For our analysis, we assumed a top elevation of 0 MLLW for this "sleeve" pile. The 16-inch pile is considered a sleeve pile because a 12-inch diameter, extra strong, galvanized pipe, with a conical end, (the "inner" pile) will be inserted into it and will extend from the bottom of the sleeve pile to 12 feet above the top of the ramp. We evaluated this pile based on soil conditions consistent with boring URS-02-11. We also evaluated this pile based on the implementation of the minimum recommended adfreeze jacking mitigation approaches as described in Section 4.3.2.2 below.

4.3.2.1 *Lateral Loads*

Two sets of lateral loads were evaluated, each applied to the extended portion of the inner pile above the sleeve pile. Each load set, consisting of one shear load parallel to the 12 percent downslope direction and one shear load perpendicular (transverse) to the downslope direction, was applied at 2 feet above the top of the sleeve pile and at 10 feet above the top of the sleeve pile. Each set of lateral loads was resolved into an equivalent single load, applied in the direction determined from the magnitudes of the contributing loads. Free head conditions were assumed for the application of the equivalent lateral load. Using the commercially available analysis software program AllPile v7.2d by CivilTech Software, pile capacity and lateral deflections were estimated. Details of our evaluation are presented in Appendix F and are summarized in Table 4-8 below.

Table 4-8: Timber Boarding Float Anchor Pile Lateral Load / Deflection Evaluation

Load Set:	3kip transverse + 6kip downslope		4kip transverse + 8kip downslope	
Application At:	**2' above sleeve**	**10' above sleeve**	**2' above sleeve**	**10' above sleeve**
Top deflection with 35' sleeve (existing soils)[1]	Less than 0.25"	Less than 0.25"	Less than 0.25"	0.28"
Top deflection with 35' sleeve (mitigated soils)	Less than 0.25"	0.25"	0.28"	0.37"

[1] Based on existing soil conditions, no adfreeze mitigation measures.
[2] Based on minimum adfreeze mitigation; poly-sheeting wrap and pea-rock backfill around pile to 10-foot depth.

4.3.2.2 *Adfreeze Jacking Loads*

The upper portion of the pile will be subject to seasonal freezing conditions. Accordingly, uplift forces due to adfreeze pile jacking should be considered as generally described in Section 4.2.2 above. Adfreeze pile jacking stresses in the existing soils could approach 50 psi if they are not mitigated. With appropriate mitigation, adfreeze stresses may be reduced to about 10 psi. Based on the 16-inch diameter pile, adfreeze jacking loads for active freeze zone depths of 5-feet and 10-feet are summarized in Table 4-9.

Table 4-9: Estimated Seasonal Adfreeze Uplift Loads (16-inch Diameter Sleeve Pile)

Soil Condition	5-foot freeze depth (load in kips)	10-foot freeze depth (load in kips)
Existing[1]	151	302
Mitigated[2]	30	60

[1] Based on existing soil conditions, no adfreeze mitigation measures, assumes 50 psi adfreeze stress.
[2] Based on minimum adfreeze mitigation; poly-sheeting wrap and pea-rock backfill around pile to 10-foot depth, assumes 10 psi adfreeze stress.

There are no downward axial loads on this pile to resist the estimated uplift load except for the weight of the sleeve pile and the weight of the inner pile. Neglecting the weight of the inner pile since it will likely be remove during cold weather, the uplift due to adfreeze jacking in the active zone must be resisted by the weight of the sleeve pile and the frictional characteristics of the thawed soils supporting the sleeve pile. For our analysis, we assumed no frictional resistance against uplift was provided in the upper 10 feet of the sleeve pile, regardless of whether or not adfreeze mitigation measures were implemented. Estimated capacities for a 35-foot, 40-foot, and 45-foot piles are summarized in Table 4-10.

Table 4-10: Estimated Ultimate Vertical Capacities (16-inch Diameter Sleeve Pile)

Direction	Soil Conditions	35-foot Pile Capacity (kips)	40-foot Pile Capacity (kips)	45-foot Pile Capacity (kips)
Downward	Existing[1]	140	173	205
Upward	Existing[1]	57	81	106
Downward	Mitigated[2]	134	165	197
Upward	Mitigated[2]	54	78	102

[1] Based on existing soil conditions, no adfreeze mitigation measures, assumes 50 psi adfreeze stress.
[2] Based on minimum adfreeze mitigation; poly-sheeting wrap and pea-rock backfill around pile to 10-foot depth, assumes 10 psi adfreeze stress.

4.3.2.3 *Adfreeze Mitigation*

The actual adfreeze jacking forces will depend on the depth of seasonal freeze, soil temperatures at the pile surface, and soil/pile bond characteristics. In order to limit adfreeze jacking forces, we recommend the following mitigation measures be considered.

1. Pre-drill or pre-excavate the area around the sleeve pile to accommodate placing a minimum of 12 inches of NFS material laterally around the pile. The NSF material should be placed to a depth of 10 feet below the planned top of subgrade at the pile location. Studies have shown that placement of NSF material over frost-susceptible materials that subsequently freeze can result in greater frost heave than if no NFS materials were used at all[10]. Due to the potential for seepage and sloughing of surrounding materials, casing or shoring to maintain the integrity of the surrounding soils should be expected. The NSF material for this application should consist of uniformly-sized, rounded gravel (e.g. pea-gravel or drain-rock) that can be readily placed around the pile. Such material achieves relatively good compaction with limited compaction effort. In order to limit migration of fine-particles into the NFS material voids, a geotextile separation fabric should be placed between the existing soils and the newly placed NFS material.
2. In conjunction with pre-drilling or pre-excavating, the upper 10 feet of the sleeve pile should be wrapped with a minimum of 2 layers of a sheet polymer. Typical installations use minimum 10-mil thick polyethylene (e.g. Visqueen®) although greater resistance to gravel puncture and toughness is provided by polyolefin sheeting (e.g. Stego Wrap®). The polymer sheeting should be placed full depth, with a maximum of one sealed, vertical closure seam per layer. The top and bottom of the sheeting should be sealed around the pile circumference. Sealants, tapes, and mastics should be appropriate for the polymer sheeting used.

[10] Nidowicz, B., and Shur, Y., (1998) "Russian and North American Approaches to Pile Design in Relation to Frost Action", PERMAFROST – 7th International Conference (Proceedings), Yellowknife (Canada), Collection Nordicana No 55, 1998

4. As an additional measure to reduce the potential bond between the surrounding soils and the pile, silicon grease can be applied to the surface of the pile prior to it being wrapped with poly-sheeting. Silicon grease is recommended as a low-adhesion agent since it is not petroleum based, it is considered none-reactive to polyethylene and polyolefin, it is not water soluble, and it performs well over the range of temperatures anticipated for the top of the sleeve pile.
5. If the inner pile is removed during cold weather, it may be possible to minimize the depth of the seasonal freeze zone by taking advantage of convection currents within the pipe pile and the normal thermal conductivity of steel. Accordingly, if the inner pile is removed, we recommend that the top of the sleeve pile receive an insulated cap during cold weather conditions.

4.4 PILE DRIVING CRITERIA AND HAMMER SIZING

Piles must be driven to the minimum depths as shown on the project drawings. URS estimates that a vibratory hammer will be suitable for installing the steel sheet piles and pipe piles to the required depth. If an impact hammer is selected for use, the following is recommended.

Ultimate capacities for various length and wall thickness pipe piles are presented in Tables 4-5 through 4-7 above. A factor of safety of 2.0 can be used to calculate allowable pile loads if a final drivability analysis using GRLWEAP is conducted upon the selection of the pile driving system. Without a GRLWEAP drivability analysis, static compression factors of safety of 3.0 are required. Factors of safety can be further reduced by performing a dynamic testing program during pile driving or by load tests.

URS estimates that an impact hammer with energy rating of no less than 20 kip-feet and no greater than 90 kip-feet will be suitable for installing the piles. If a hammer with less energy is used, it may not be capable of installing the pile to the required depth; if a hammer with more energy is used, damage may occur to the pile. Once a hammer and driving systems has been selected, a drivability analysis should be performed prior to pile installation to verify that the proposed hammer is suitable for installing the piles. Pile compressive stresses during driving should be limited to 85 percent of the yield strength of the piles.

4.5 SUPPORT FOR SMALL STRUCTURES

It is our understanding that a restroom building, waste oil collection building and dumpster pads may be constructed in the future parking area, but are not part of the current scope of work. Heated structures in contact with the ground will thaw underlying permafrost over time, which leads to long-term settlement problems. Seasonal thawing may range up to 10 feet in areas of granular soil and 5 feet in fine fine-grained soils. These depths become much deeper if a heated structure is placed in ground contact. Also, design of small structures will need to accommodate storm surges up to 6 to 8 feet above MLLW. URS recommends that when design of the structures is required that a case-specific evaluation and design be performed once load, building types, and configures are known.

4.6 GRAVEL PARKING AREAS

Performance of the gravel parking areas depends on how well the underlying subgrade is prepared and insulated to resist impacts from freeze/thaw. A nominal thickness of gravel (~1-foot) placed on a compacted dredged material will require frequent maintenance to grade out the humps and fill in the potholes that should be anticipated to form each year. By better insulating the subgrade with additional gravel, insulation, or cement treating the subgrade soils, less maintenance and a better performing parking area can be realized.

Thaw penetration was calculated for two conditions: (1) 1-foot of gravel placed on a subgrade separation geotextile over compacted, dredged material; and (2) 1-foot of gravel placed on top of 4 inches of Styrofoam insulation on compacted, dredged materials. Using a design thaw index of 3,000 deg-F days, thaw penetration for the first scenario was calculated at up to 5 feet, while for the second scenario it was less than 1-foot. Condition 1 will yield a very poor performance pavement. Condition 2 could yield a reasonably acceptable pavement performance provided the insulation remains intact, which it might not because of poor subgrade support from the thawed silt. Thaw penetration could be kept out of the subgrade with a thicker gravel section or more insulation, or a combination of both.

The following three alternatives could be used at this location:

1. Minimum of 12 inches of crushed gravel over the compacted dredge fill with a subgrade separation geotextile between the gravel and dredged material to help limit the rock from being forced down into a thawed subgrade. A subgrade geotextile by itself does not however increase the strength of the gravel pavement section. A geogrid placed on top of the geotextile will increase the strength of the gravel pavement section and limit localized deleterious effects of spring thaw on pavement performance (ruts and pot holes). This alternative may be least capital cost but would likely require the greatest degree of ongoing maintenance.
2. Minimum of 6 inches of crushed gravel over 12 to 18 inches of cement treated dredge fill to create a 12- to 18-inch thick cement treated base (CTB) to support the gravel. About 10 percent cement is a good preliminary estimate, 12 percent would provide for a margin of error in the absence of a formal testing program. Good construction control would be required for the CTB. This approach could result in the least amount of ongoing maintenance.
3. Minimum of 12 inches of crushed gravel over 4 inches of high-strength polystyrene (e.g. Styrofoam®) insulation. This solution would minimize thaw penetration into the compacted dredge subgrade and would work best for light wheel loads.

All alternatives would require positive surface drainage control to limit run-on and maximize run-off in a controlled manner. Dredged materials should be properly moisture conditioned and placed in accordance with Section 5.5 of this report.

4.6.1 Acceptable Subgrade Soils

Variable subgrade soils were encountered at and near the surface on this site. Gravel-surfaced parking areas may be developed as stated in Section 4.6 above. Gravel pavement subgrades in areas of organic soils or unstable soft silt and loose silty sand that can’t be properly moisture conditioned and recompacted should be overexcavated and subsequently backfilled with on-site materials as outlined in Section 5.5.

The recommended gravel layer provided anticipates that construction will occur during and after a period of dry weather, and otherwise unstable soils at finished subgrade will be removed and/or stabilized based on observations by a qualified representative.

4.6.2 Subgrade Evaluation During Construction

Once the parking areas are stripped and cut to design subgrade elevation, they should be proof-rolled utilizing a fully-loaded water truck or dump truck prior to placement of roadway materials. If construction occurs during wet weather, proof-rolling may not be appropriate and subgrades may be evaluated by hand probes or other methods. Areas that exhibit excessive deflection or soft areas under the proof-roll should be removed and replaced with on-site materials as outlined in Section 5.5.

4.6.3 Materials

Typically, aggregate surface course material and placement should conform to the most current State of Alaska, Standard Specifications for Highway Construction. However, given the remote site location and the resources available, a more locally available gravel material should be appropriate. Gravel should conform to the project specifications and drawings for the specified material. Compact aggregate base course to not less than 95 percent of the material's maximum dry density as determined in general accordance with AASHTO T-180. Regular maintenance of the gravel-surfaced parking and drive lanes should be planned. Depending on site utilization and gravel pavement alternative selected, regrading and refreshing the gravel surface may be required on an annual basis.

4.7 UTILITY AND CULVERTS TRENCHES

Trenches for dock and parking area lighting utilities and culverts to convey stormwater from Caribou Drive under the proposed parking area and into the basin are anticipated. Recommended excavation and backfill criteria are presented below. Utilities and culverts within 5 to 10 feet of the finished ground surface may be impacted by seasonal freeze/thaw conditions. Careful consideration should be given to properly constructing these features and protecting them from seasonal conditions.

4.7.1 Trench Excavation

Temporary trench cuts above groundwater should stand near vertical to depths of 4 feet, for short periods of time, depending on moisture conditions of the subgrade soils and weather conditions. If seepage is encountered that undermines the stability of the trench, or if caving of the sidewalls is observed during excavation, the sidewalls should be flattened or shored.

Depending on the time of year trench excavations occur, trench dewatering may be required in order to maintain dry working conditions if the invert elevations of the proposed utilities are below the groundwater level. Pumping from sumps located within the trench will likely be effective in removing limited quantities of water resulting from seepage. If groundwater is present at the base of utility excavations, we recommend placing trench stabilization material at the base of the excavations. Trench stabilization material should consist of 1-foot of well-graded gravel, crushed gravel, or crushed rock with a maximum particle size of 4 inches, and less than 10 percent material passing the U.S. Standard No. 4 Sieve. The material should be free of organic matter and other deleterious material, placed in one lift, and compacted until well-keyed.

While we have described certain approaches to the trench excavation, dewatering, and base stabilization, it is the contractor's responsibility to select the excavation and dewatering methods, to monitor the trench excavations for safety, and to provide any shoring required to protect personnel and adjacent improvements. All trench excavations should be in accordance with applicable OSHA and State regulations.

4.7.2 Trench Backfill Material

Utility bedding and support, and trench backfill should be in accordance with the utility pipe manufacturer’s requirements. In the absence of manufacturer requirements, or as a supplement to them, trench backfill for the base and pipe zone should consist of well-graded granular material containing no organic matter or debris, have a maximum particle size of ¾-inch, and have less than 10 percent material passing the U.S. Standard No. 200 Sieve.

Backfill for the pipe base and within the pipe zone should be placed in maximum 1-foot thick loose lifts, and compacted to not less than 90 percent of the material’s maximum dry density, as determined in general accordance with AASHTO T-180, or as recommended by the pipe manufacturer. Backfill above the pipe zone should be placed in maximum 1-foot thick loose lifts, and compacted to not less than 90 percent of the material’s maximum dry density in general accordance with AASHTO T-180. Trench backfill within 3 feet of finished subgrade elevation below pavements or other site developments should be placed in maximum 1-foot thick loose lifts and compacted to not less than 95 percent of the material’s maximum dry density as determined in general accordance with AASHTO T-180.

4.8 ADDITIONAL DRAINAGE CONSIDERATIONS

We recommend that parking and drive lane subgrades and surfaces, and ground near or adjacent to structures be sloped to drain away from structures. Appropriate surface slopes should be planned for subgrade materials that are cement-treated since such materials have relatively low permeability.

Surface water from parking and drive lane area surfaces and open spaces should be collected and routed to a suitable discharge point. Surface water should not be directed onto slopes.

5.0 EARTHWORK AND CONSTRUCTION RECOMMENDATIONS

The recommendations presented in this report are based on the information provided to URS by the City, results of the field investigation, laboratory data, and professional judgment. URS has observed only a small portion of the pertinent soil and groundwater conditions. The recommendations are based on the assumptions that the soil conditions do not deviate appreciably from those found during the field investigation. If the design or location of the proposed development changes, or if variations or undesirable geotechnical conditions are encountered during site development, URS should be consulted to review and revise our recommendations, if appropriate.

5.1 STRIPPING / OVEREXCAVATION

The sparse vegetation and other unsuitable or unstable surface materials should be removed from proposed areas to receive fill, and for a 5-foot margin around such locations. Based on the results of our field explorations, the depth of unsuitable surface materials is expected to be generally less than about ½-foot. A qualified professional should provide recommendations for actual stripping depths based on observations during stripping. Stripped surface vegetation and other unsuitable or unstable surface materials should be transported off site for disposal or stockpiled for later use in landscaped areas. Existing structures (foundations, concrete slabs, and buried utilities), debris, or other deleterious material, if encountered during site preparation, should be completely removed and disposed of off site.

5.2 SUBGRADE PREPARATION

After site preparation as recommended above, and prior to placement of fill, a qualified professional should probe and/or observe a proof roll of the exposed subgrade soils in order to identify areas of excessive yielding. If areas of soft or loose soils or excessive yielding are identified, the affected material should be stabilized as directed by the geotechnical engineer. Stabilization may be achieved by additional excavation to firm, stable subgrade, and replacement with compacted granular fill or stabilization rock (e.g. 4-inch-minus crushed rock). Separation geotextiles and geogrid reinforcement of subgrade soils, and cement treatment, can also be utilized to stabilize soft or yielding areas.

5.3 DREDGING

Swan Lake will require dredging to reach the design depths that will allow passage of the local fleet. Options for dredging include: hydraulic dredging, clamshell dredging, and dewatering the lake and excavation of the area using traditional equipment.

5.3.1 Hydraulic Dredging

Hydraulic dredging is performed by using a precise gps-guided rotating head supported off of a barge to excavate sediments from the lake bottom. Fluidized sediments are pumped via a series of hoses from the rotating head to an upland storage cell. Water and suspended sediment are pumped into one end of the cell and as the water flows through the cell, sediment falls out of suspension and are deposited within the cell. The water is then allowed to flow out of the opposite end of the cell over a weir and back into the lake. Hydraulic dredging equipment would have to be hauled over land and be launched into the lake given the access restriction under the existing bridge into Swan Lake.

Hydraulic dredging typically requires a significant amount of upland property to form the storage cell. The cells are typically constructed with earthen berms to retain the dredged sediments. The size of the cells is dependent upon the methods used, amount of material anticipated, and the consistency of the dredged materials encountered. Finer-grained sediments require a larger cell to allow sufficient time for the material to drop out of suspension. If the cell is too short, the dredged material may flow back out the end of the cell and into the lake. Internal berms within the cell constructed in a serpentine fashion can increase the flow path within the cell and promote deposition of the suspended solids.

5.3.2 Clamshell Dredging

Clamshell dredging utilizes a barge-mounted crane with clamshell bucket attached to the cables on the boom. The bucket is lowered open into the lake until it reaches the bottom of the lake. The bucket is then closed and raised out of the water. The water and sediment within the clamshell is unloaded onto a barge or placed directly on land. This method is less precise and is slower than hydraulic dredging, and typically more material is excavated than is required to ensure that the minimum depths are reached over the dredged area. This method is however often less expensive than hydraulic dredging. Equipment for this method would also have to be hauled overland to the lake given the similar access restriction.

5.3.3 Conventional Excavation

Conventional excavation after dewatering has been proposed as an option by a local contractor, likely as a winter operation. Water within the lake would be pumped into Kotzebue Lagoon and any water flowing into the lake would be diverted via pipes around the lake. Tracked-mounted excavation equipment would be used to grade the lake bottom to the required design elevation. Material would be hauled to a designated upland storage area for disposal. Given the remote location of Kotzebue and the limited equipment in town to perform dredging, this alternative may be the most cost effective.

Each dredging method has pros and cons associated with it and can yield the desired end result. The material types encountered within the lake will not preclude any of the above alternatives. Final selection of dredging methods should be at the contractor's discretion.

5.3.4 Placement Location of Dredged Materials

Two potential areas have been identified for placement of dredged materials, the ball field and pavilion area located at the southwest portion of the basin and the boggy area immediately east of the channel. Both areas appear to have sufficient room to settle out the dredged materials and placement of these materials should not detrimentally impact the permafrost in these areas. It is unlikely that these materials will be able to be compacted, therefore if future reuse of these areas includes structures, a site-specific analysis and design recommendations should be provided.

5.4 EROSION CONTROL DURING CONSTRUCTION

Silt fences, sedimentation ponds, wheel washes, and granular haul roads should be used as required to reduce sediment transport during construction to acceptable levels. Measures to reduce erosion and monitor erosion control should be implemented in general accordance with State, City, and Borough regulations regarding erosion control, where applicable. A Dredge Disposal Plan will be submitted by the Contractor, consistent with United States Army Corps of Engineers Section 404 permit requirements.

5.5 SELECT BACKFILL

An immediate source of gravel material is not available within trucking distance of the project site. Granular materials have been identified nearby, but it will require a barge to bring it to the City, then the material will have to be off loaded and then reloaded into trucks for transport to the site. Preliminary cost estimates provided by Toby Drake of Drake Construction estimate the cost to transport and place the material on site at $50 to $60 per cubic yard. Two pit locations were identified as potential sources of material: Noatak Pit and Nimiuk Point Pit. Testing results have also been provided by Drake Construction for reaction with sodium sulfate, LA abrasion, soundness, and degradation for the Noatak Pit, and gradation testing results for the Nimiuk Point Pit. Initial test results show that this material may be suitable for use for this project, but may not meet ADOT&PF requirements for selected material. Therefore, given the high cost of importing material that meets ADOT&PF, a project-specific material classification will be developed.

5.5.1 On-site Soils

The on-site silts (ML) and sands (SP,SM) that are not frozen may be suitable for re-use as fill provided they can be properly moisture conditioned. Based on the samples of these materials encountered during our investigation, the moisture content of these soils should be expected to be well above the optimum for compaction except perhaps during the driest periods of the year. Peat (PT) and other highly organic soils are not suitable for re-use as fill.

If used as structural fill, on-site soils should be unfrozen and free of ice, organic matter, debris or particles larger than 4 inches in size. For fine grading purposes, the maximum particle size should be limited to 1½ inches. When used as fill, these soils should be placed in lifts with a maximum thickness of 8 inches and compacted to not less than 95 percent of the material's maximum dry density, as determined in general accordance with AASHTO T-180. Additionally these materials should have moisture contents within 3 percent of optimum. Field density tests should be performed to evaluate compaction. Compaction test results of exposed fill material are considered valid for a period of 48 hours after the test is taken, provided there are no drastic changes in weather conditions or construction traffic.

Placement and compaction of dredged materials may be difficult if handled when wet. Drying out soils such as those encountered can be accomplished by windrowing the soils and working them with an excavator or disking them to promote aeration and evaporation. In addition, placing these materials on seasonally thawing soils may also pose construction difficulties. If the on-site soils cannot be properly moisture-conditioned and/or processed, we recommend either using imported granular material or amending the on-site soils with cement.

Amending the on-site soils with cement will help strengthen the materials and reduce the plasticity of the materials, allowing easier workability. Cement addition of about 12 percent by weight is recommended, especially in the upper 18 inches of placed material. Cement can be blended in stockpiles or windrows, hydrated (if required) and then placed and compacted on site. Compaction should be performed using a sheep's foot roller; vibratory compaction is not recommended. Cement amended soils should be allowed to sufficiently cure prior to placing additional lifts of material or surface treatments.

5.5.2 Imported Granular Fill

Imported granular fill should consist of angular pit or quarry run rock, crushed rock, or crushed gravel that is fairly well graded between coarse and fine particle sizes. The granular fill should contain no frozen soils, ice, organic matter, debris, or particles larger than 4 inches, and have less than 10 percent material passing the U.S. Standard No. 200 Sieve. For fine grading purposes, the maximum particle size should be limited to 1½ inches. Granular fill material should be placed in lifts with a maximum thickness of about 1-foot, and compacted to not less than 95 percent of the material's maximum dry density, as determined in general accordance with AASHTO T-180. Proper moisture conditioning and the use of vibratory equipment will facilitate compaction of these materials. Field density tests of the exposed fill material are considered valid for a period of 48 hours after the test is taken, provided there are no drastic changes in weather conditions or construction traffic.

Compaction of granular fill materials with high percentages of particle sizes in excess of 1½-inches should be confirmed by proof-roll observation or continuous observation of fill placement by a qualified professional, since these materials cannot be tested conventionally using a nuclear densometer or volume/displacement methods. Granular fills with high percentages of particle sizes in excess of 1½-inches should be capped with a minimum of 12 inches of 1½-inch-minus, or smaller, granular fill under all structural elements (e.g., footings, concrete slabs, and pavements).

5.5.3 Fill Placed in Water

We anticipate placement of fill materials in water on this project, specifically around the boat launch and within the parking areas. In areas where stability of the near-shore slopes is not critical, on-site materials can be placed uncompacted below the water surface. For areas were stability is critical (e.g., behind the sheet pile wall, within the parking area, and below the boat launch concrete) fill material should be placed and compacted in the dry as specified in Section 5.5.1 and 5.5.2. The existing subgrade should be benched to provide a level surface prior to placement of fill materials. Placing these materials in the dry will require dewatering of the localized areas.

5.6 WET WEATHER CONSIDERATIONS

5.6.1 General Considerations

The on-site silty sand, silt, and clay soils are susceptible to disturbance during wet weather. Trafficability of these soils may be difficult, and significant damage to subgrade soils could occur, if earthwork is undertaken without proper precautions at times when the exposed soils are more than a few percentage points above optimum moisture content. Gravel was encountered at only a limited number of locations and in limited quantities in the borings. This leads us to believe that surface gravel observed may have been transported during snow dumping operations and may not actually be an occurring source, and therefore we do not expect that there will be significant salvageable gravel sources on site. Accordingly, crushed granular materials for use as wet weather surfacing and for other purposes on the project will need to be imported to the site.

For construction that occurs during the wet season, site preparation activities may need to be accomplished using track-mounted equipment, loading removed material onto trucks supported on granular haul roads, or other methods to limit soil disturbance. A qualified professional should evaluate the subgrade during excavation by probing rather than proof-rolling. Soils that have been disturbed during site preparation activities, or soft or loose areas identified during probing, should be over-excavated to firm, stable subgrade, and replaced with imported granular structural fill.

5.6.2 Equipment Haul Roads & Staging Areas

We recommend that a geotextile separation fabric be placed as a barrier between the subgrade and imported fill in areas of repeated or heavy construction traffic. The geotextile fabric should have a minimum Mullen burst strength of 250 pounds per square inch for puncture resistance, and an apparent opening size (AOS) between the U.S. Standard No. 70 and No. 100 Sieves.

To construct durable haul roads subjected to repeated heavy construction traffic, we recommend a minimum of 18 inches of crushed granular material. The crushed granular material should consist of sound crushed rock with a maximum particle size between 1½ to 4 inches. The prepared subgrade should be covered with geotextile fabric prior to placement of the crushed granular material. The crushed granular material should be placed in a single lift and compacted using a smooth-drum, non-vibratory roller. In lieu of this method, on-site material can be used during dry weather. However, the on-site materials are highly susceptible to moisture, so during periods of wet weather the roads may fail during use, requiring maintenance or reconstruction.

6.0 CONSTRUCTION OBSERVATION

Satisfactory earthwork and structural performance depends to a large degree on the quality of construction. Sufficient observation of the contractor's activities is a key part of determining that the work is completed in accordance with the construction drawings and specifications. Subsurface conditions observed during construction should be compared with those encountered during subsurface explorations, and recognition of changed conditions often requires experience. We recommend that qualified personnel visit the site with sufficient frequency to detect whether subsurface conditions change significantly from those observed to date and anticipated in this report.

We recommend that the geotechnical engineer or their representative attend a pre-construction meeting coordinated by the contractor and/or developer. The project geotechnical engineer or their representative should provide observations and/or testing of at least the following elements during construction:

- Stripping and grubbing
- Subgrade preparation for structural fills, shallow foundations, floor slabs, and pavements
- Compaction of structural fill
- Compaction of utility trench backfill
- Placement of foundation and other drains
- Compaction of base rock for floor slabs and pavements
- Sheet pile, pipe pile, and anchor installation

It is imperative that the owner and/or contractor request earthwork observations and testing at a frequency sufficient to allow the geotechnical engineer to provide a final letter of compliance for the earthwork activities.

7.0 LIMITATIONS

We have prepared this report for use by the owner/developer and other members of the design and construction team for the proposed development. The opinions and recommendations contained within this report are not intended to be, nor should they be construed as a warranty of subsurface conditions, but are forwarded to assist in the planning and design process.

We have made observations based on our explorations that indicate the soil conditions at only those specific locations and only to the depths penetrated. These observations do not necessarily reflect soil types, strata thickness, or water level variations that may exist between or away from our explorations. If subsurface conditions vary from those encountered in our site explorations, URS should be alerted to the change in conditions so that we may provide additional geotechnical recommendations, if necessary. Observation by experienced geotechnical personnel should be considered an integral part of the construction process.

The owner/developer is responsible for insuring that the project designers and contractors implement our recommendations. When the design has been finalized, we recommend that the design drawings and specifications be reviewed by our firm to see that our recommendations have been interpreted and implemented as intended. If design changes are made, we request that we be retained to review our conclusions and recommendations and to provide a written modification or verification.

The scope of our services does not include services related to construction safety precautions, and our recommendations are not intended to direct the contractor's methods, techniques, sequences, or procedures, except as specifically described in our report for consideration in design.

Geotechnical engineering and the geologic sciences are characterized by a degree of uncertainty. Professional judgments presented in this report are based on our understanding of the proposed construction, familiarity with similar projects in the area, and on general experience. Within the limitations of scope, schedule, and budget, our services have been executed in accordance with the generally accepted practices in this area at the time this report was prepared; no warranty, expressed or implied, is made. This report is subject to review and should not be relied upon after a period of three years.

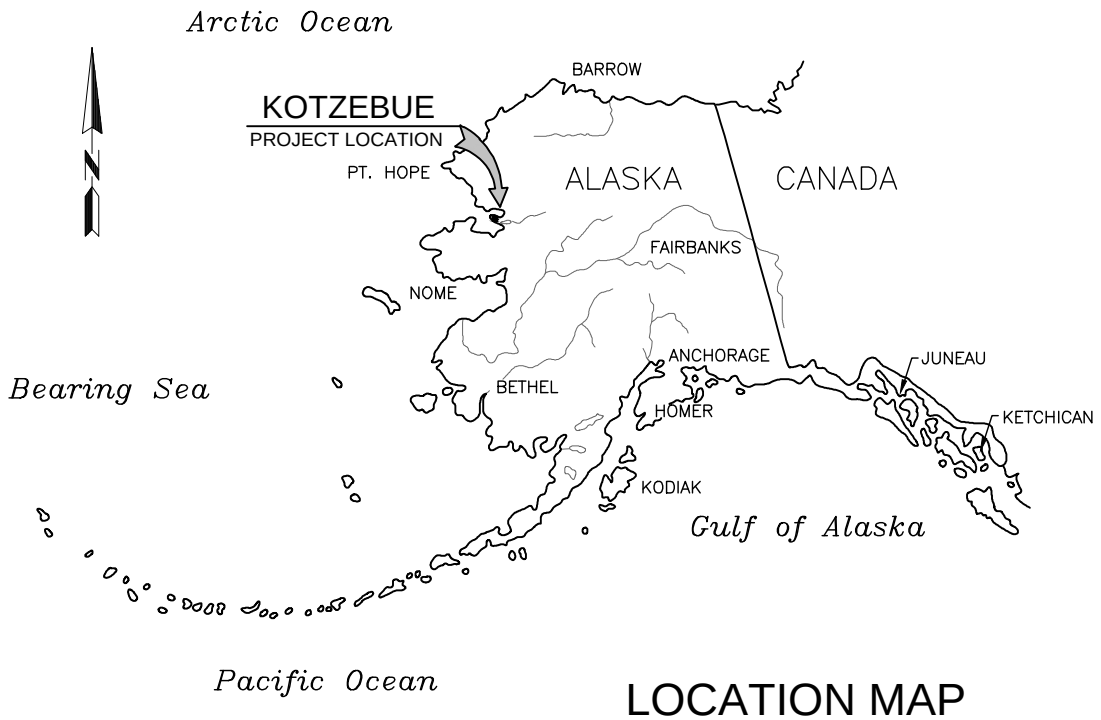

LOCATION MAP

SCALE: NOT TO SCALE

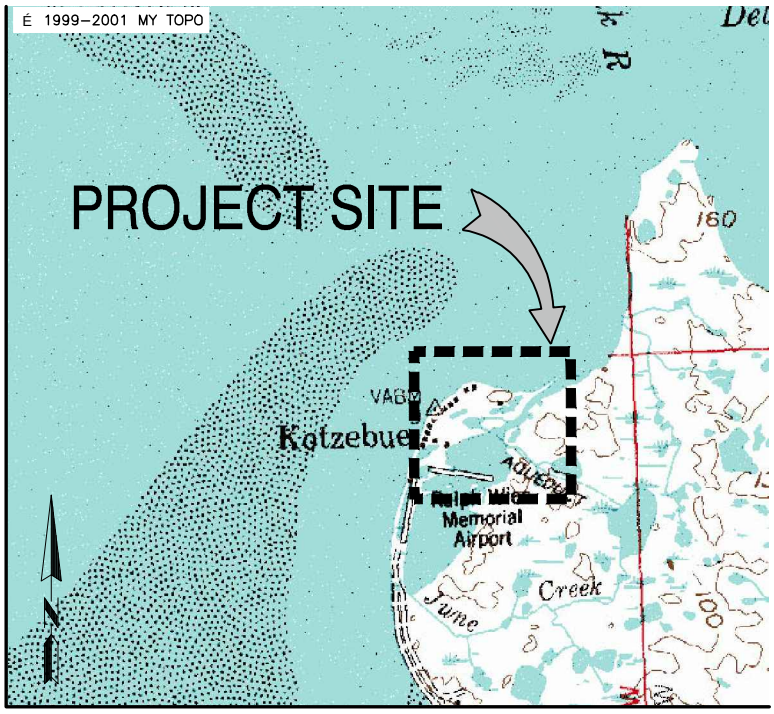

VICINITY MAP

SCALE: NOT TO SCALE

LOCATION & VICINITY MAP

URS

MAY 2011
26220918

CITY OF KOTZEBUE
SWAN LAKE SMALL BOAT HARBOR
KOTZEBUE, AK

FIGURE 1

O:\26220926 Swan Lake Facility Improvement\5000 Technical\CAD\Figure 1 - Location & Vicinity Map.dwg May 26, 2011 - 10:10pm

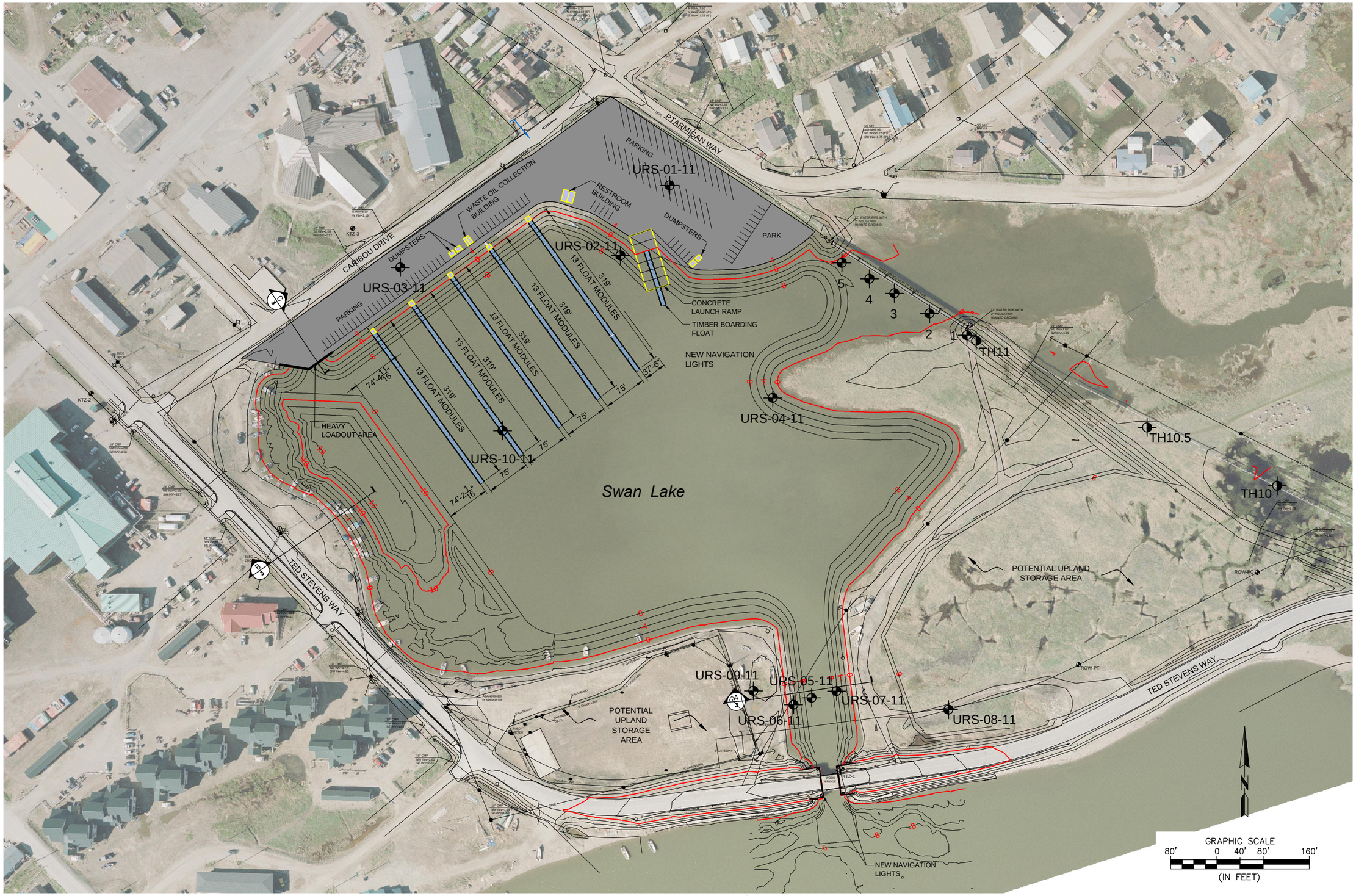

LEGEND

URS-01-11	2011 URS BORING	TH11	2008 LARSON CONSULTING GROUP BORING
1	1995 CROWTHER ASSOCIATES BORING (LOCATION APPROXIMATE)		

URS
700 G STREET, SUITE 500
ANCHORAGE, AK 99501
TEL: (907) 279-0543
FAX: (907) 276-7679

CITY OF KOTZEBUE
Gateway to the Arctic

NO.	BY	DATE	REVISIONS DESCRIPTION

CITY OF KOTZEBUE

SWAN LAKE SMALL BOAT HARBOR

KOTZEBUE, AK

SITE PLAN

PROJECT No:	26220918
DATE:	05/27/2011
DESIGNED:	
DRAWN BY:	
CHECKED BY:	
SHEET:	2
PAGE:	2 OF 4

O:\26220918 SWAN LAKE FACILITY IMPROVEMENT\5000 TECHNICAL\CADD\FIGURE 2 - SITE PLAN.DWG - Revised 6/14/2011 9:35:12 AM

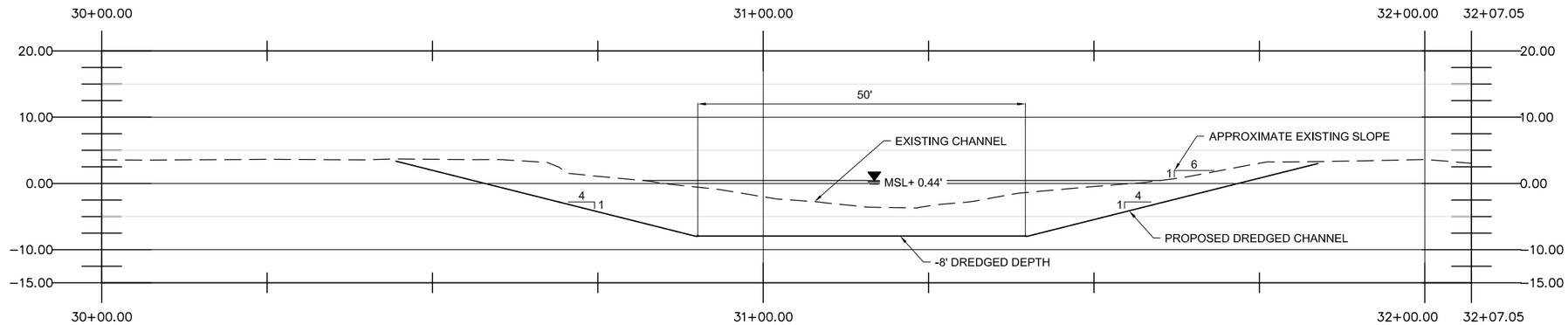

A/2 CHANNEL SECTION
SCALE: NTS

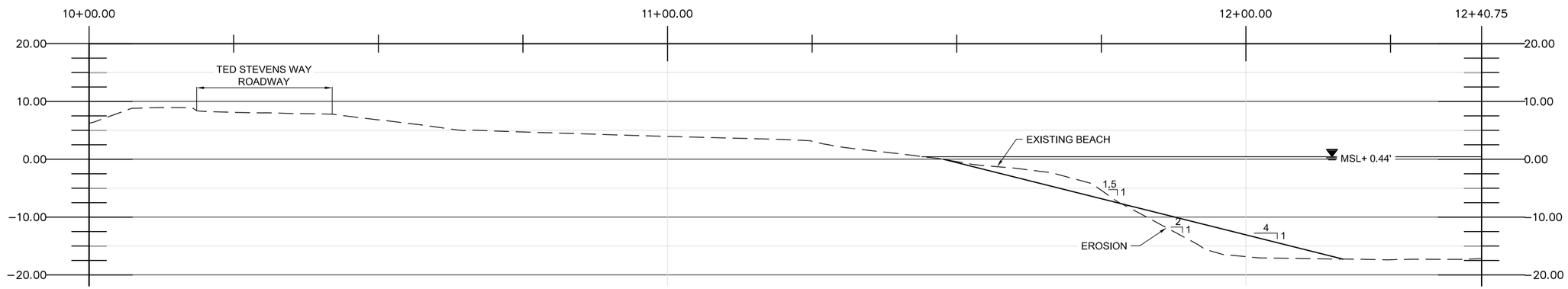

B/2 UPLAND BANK SECTION
SCALE: NTS

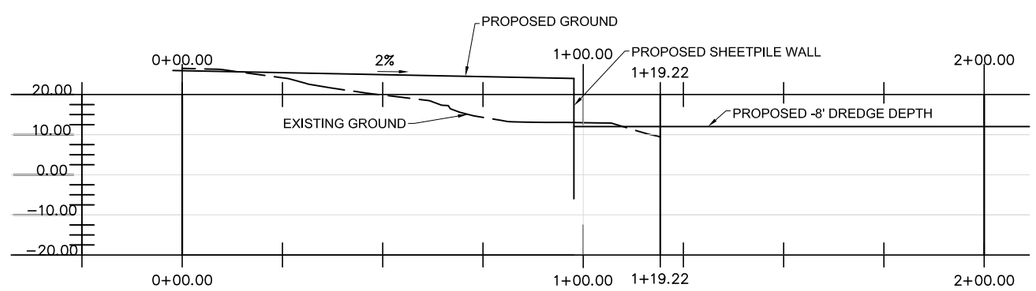

C/2 HEAVY LOAD OUT AREA SECTION
SCALE: NTS

URS
700 G STREET, SUITE 500
ANCHORAGE, AK 99501
TEL: (907) 279-0543
FAX: (907) 276-7679

REVISIONS

NO.	BY	DATE	DESCRIPTION

KOTZEBUE

SWAN LAKE
KOTZEBUE, AK

PROFILE
UPLANDS SECTIONS

PROJECT No: 26220926
DATE: 05/26/2011
DESIGNED:
DRAWN BY:
CHECKED BY:
SHEET: 3
PAGE: 3 OF 4

O:\26220926 SWAN LAKE FACILITY IMPROVEMENT\000 TECHNICAL\CAD\FIGURE 3 - SECTIONS.DWG - Revised 6/14/2011 9:58:24 AM

SOIL CLASSIFICATION CRITERIA AND TERMINOLOGY

SWAN LAKE FACILITY IMPROVEMENT - KOTZEBUE, ALASKA

Classification of Terms and Content

NAME: MINOR Constituents (12-50%); MAJOR Constituents (>50%); Slightly (5-12%)
Relative Density or Consistency
Color
Moisture Content
Plasticity
Trace Constituents (0-5%)
Other: Grain Shape, Approximate Gradation, Organics, Cement, Structure, Odor….
Geologic Name or Formation: (Fill, Alluvium, Till, Willamette Silt, Troutdale Formation, etc.)

USCS Grain Size

Fines		<#200 (0.075 mm)
Sand	Fine	#200 - #40 (0.425 mm)
	Medium	#40 - #10 (2 mm)
	Coarse	#10 - #4 (4.75 mm)
Gravel	Fine	#4 - 0.75 inch
	Coarse	0.75 inch - 3 inches
Cobbles		3 to 12 inches
		scattered < 15% est.
		numerous > 15% est.
Boulders		> 12 inches

Relative Density or Consistency

Granular Material		Fine-Grained (cohesive) Materials				
SPT N-	Density	SPT N-Value	Torvane tsf Shear Strength	Pocket Pen tsf Unconfined	Consistency	Manual Penetration Test
		<2	<0.13	>0.25	Very Soft	Easy several inches by fist
0 - 4	Very Loose	2 - 4	0.13 - 0.25	0.25 - 0.50	Soft	Easy several inches by thumb
4 - 10	Loose	4 - 8	0.25 - 0.50	0.50 - 1.00	Medium Stiff	Moderate several inches by thumb
10 - 30	Medium Dense	8 - 15	0.50 - 1.00	1.00 - 2.00	Stiff	Readily indented by thumb
30 - 50	Dense	15 - 30	1.00 - 2.00	2.00 - 4.00	Very Stiff	Readily indented by thumbnail
>50	Very Dense	>30	>2.00	>4.00	Hard	Difficult by thumbnail

Moisture Content

Dry: Absense of moisture, dusty, dry to the touch
Moist: Leaves moisture on hand
Wet: Visible free water, likely from below water table

	Plasticity	Dry Strength	Dilatency	Toughness
ML	Non to Low	Non to Low	Slow to Rapid	Low, can't roll
CL	Low to Medium	Medium to High	None to Slow	Medium
MH	Medium to High	Low to Medium	None to Slow	Low to Medium
CH	Medium to High	High to Very High	None	High

Structure

Stratified: Alternating material layers or color > 6 mm thick
Laminated: Alternating material layers or color < 6 mm thick
Fissured: Breaks along definite fracture planes
Slickensided: Striated, polished, or glossy fracture planes
Blocky: Cohesive soil that can be broken down into small angular lumps which resist further breakdown
Lenses: Has small pockets of different soils, note thickness.
Homogeneous: Same color and appearance throughout

Unified Soil Classification Chart (Visual-Manual Procedure) (Similar to ASTM Designation D-2488)

Major Divisions			Group Symbols	Typical Names
Coarse-Grained Soils: More than 50% retained on the No. 200 sieve	Gravels: 50% or more *retained* on the No. 4 sieve	Clean Gravels	GW	Well-graded gravels and gravel-sand mixtures, little or no fines
			GP	Poorly-graded gravels and gravel-sand mixtures, little or no fines
		Gravels with Fines	GM	Silty gravels, gravel-sand-silt mixtures
			GC	Clayey gravels, gravel-sand-clay mixtures
	Sands: 50% or more *passing* on the No. 4 sieve	Clean Sands	SW	Well-graded sands and gravelly sands, little or no fines
			SP	Poorly-graded sands and gravelly sands, little or no fines
		Sands with Fines	SM	Silty sands, sand-silt mixtures
			SC	Clayey sands, sand-clay mixtures
Fine-Grained Soils: More than 50% retained on the No. 200 sieve	Silt and Clays Low Plasticity Fines		ML	Inorganic silts, rock flour, clayey silts
			CL	Inorganic clays of low to medium plasticity, gravelly clays, sandy clays, lean clays
			OL	Organic silt and organic silty clays of low plasticity
	Silt and Clays High Plasticity Fines		MH	Inorganic silts, clayey silts
			CH	Inorganic clays of high plasticity, fat clays
			OH	Organic clays of medium to high plasticity
Highly Organic Soils			PT	Peat, muck, and other highly organic soils

URS

111 SW Columbia, Suite 1500 Portland, OR 97201

URS PROJECT NUMBER: 26220926

FIGURE 4

APPENDIX A

EXPLORATION LOGS

Project: Swan Lake Facility Improvement
Project Location: Swan Lake, Kotzebue, AK
Project Number: 26220926

Key to Log of Boring

Elevation feet	Depth, feet	SAMPLES Type	SAMPLES Number	SAMPLES Sampling Resistance Blows/12 in.	SAMPLES Recovery (in.)	Graphic Log	Lithology Log (USCS Code)	MATERIAL DESCRIPTION	Moisture Content, %	REMARKS AND OTHER TESTS
1	2	3	4	5	6	7	8	9	10	11

COLUMN DESCRIPTIONS

1 **Elevation:** Elevation in feet referenced to mean sea level (MSL) or site datum.

2 **Depth:** Depth in feet below the ground surface.

3 **Sample Type:** Type of soil sample collected at depth interval shown; sampler symbols are explained below.

4 **Sample Number:** Sample identification number.

5 **Sampling Resistance:** Number of blows required to advance driven sampler 12 inches beyond first 6-inch drive interval, or distance noted, using a 140-lb hammer with a 30-inch drop; hydraulic down-pressure for tube sampler.

6 **Recovery (in.)**

7 **Graphic Log:** Graphic depiction of subsurface material encountered; typical symbols are explained below.

8 **Lithology Log:** Unified Soil Classification Code (USCS) for corresponding lithologic unit.

9 **Material Description:** Description of material encountered; may include color, moisture, grain size, and density/consistency.

10 **Water Content:** Water content of soil sample measured in laboratory, expressed as percentage of dry weight of specimen.

11 **Remarks and Other Tests:** Comments and observations regarding drilling or sampling made by driller or field personnel. Other field and laboratory test results, using the following abbreviations:

TYPICAL MATERIAL GRAPHIC SYMBOLS

Poorly Graded Sand

Poorly Graded Sand with Silt

Silty Sand with Gravel

Poorly Graded Sand with Gravel

Poorly Graded Gravel with Sand

Poorly Graded Gravel

Peat

Silty Sand

Silt

TYPICAL SAMPLER GRAPHIC SYMBOLS

Split Spoon Sampler

OTHER GRAPHIC SYMBOLS

Soil classifications are based on the Unified Soil Classification System. Descriptions and stratum lines are interpretive; field descriptions may have been modified to reflect lab test results. Descriptions on these logs apply only at the specific boring locations and at the time the borings were advanced; they are not warranted to be representative of subsurface conditions at other locations or times.

Project: Swan Lake Facility Improvement **Project Location: Swan Lake, Kotzebue, AK** **Project Number: 26220926**	**Log of Boring URS-01-11** Sheet 1 of 3

Date(s) Drilled	**3-31-2011**	Logged By	**J. Dabkowski**	Checked By	**C. Vita**
Drilling Method	**Hollow Stem Auger**	Drill Bit Size/Type	**4 1/4" O.D.**	Total Depth of Borehole	**70.0 feet**
Drill Rig Type	**D-40 Skid Rig**	Drilling Contractor	**Denali Drilling**	Approximate Surface Elevation	**4.0 feet MSL**
Groundwater Level and Date Measured	**Not Measured**	Sampling Method(s)	**SPT**	Hammer Data	**140lb Manual**
Borehole Backfill	**Soil Cuttings**	Location	**N 66° 53.857' W 162° 34.732'**		

Elevation, feet	Depth, feet	SAMPLES Type	Number	Sampling Resistance, Blows/12 in.	Recovery (in.)	Graphic Log	Lithologic Log (USCS Code)	MATERIAL DESCRIPTION Comments:	Moisture Content, %	REMARKS AND OTHER TESTS
	0						SM	**SILTY SAND WITH GRAVEL**, brown, frozen, medium sand, some gravel at surface, subangular to subrounded.		1.5 feet snow and ice.
			1	50/2"	2				17.1	
0			2	50/3"	3				17	
	5									
			3	50/4"	4		SM	**SILTY SAND**, dark brown, frozen, fine to medium sand, trace fine organics.	33.8	
-5			4	50/3"	3				24.9	
	10									
-10			5	41	18		ML	**SANDY SILT**, dark brown, non-plastic, frozen, fine sand.	29	
	15									
-15			6	18	18		ML	**SILT**, dark brown, non-plastic, moist, very stiff, fine sand, trace fine organics.	39.9	
	20									
-20			7	18	18				41.5	
	25									
-25			8	27	18			*Grades to wet.*	34	
	30									

URS

Project: Swan Lake Facility Improvement
Project Location: Swan Lake, Kotzebue, AK
Project Number: 26220926

Log of Boring URS-01-11

Elevation, feet	Depth, feet	SAMPLES Type	Number	Sampling Resistance, Blows/12 in.	Recovery (in.)	Graphic Log	Lithologic Log (USCS Code)	MATERIAL DESCRIPTION	Moisture Content, %	REMARKS AND OTHER TESTS
	30						ML	**SANDY SILT**, dark brown, non-plastic, wet, very stiff, fine sand.		
-30	35		9	77	18			*Grades to hard.*	26.2	
-35	40		10	62	18				24.1	
-40	45		11	51	18				24.1	
-45	50		12	19	12			*4" peat layer with trace fine sand.*	158.1	
							SM	**SILTY SAND**, dark brown, wet, medium dense, fine to coarse sand, fine subrounded gravel.		
-50	55		13	19	12				28.1	
-55	60		14	25	12				13.8	
-60	65		15	43	6			*Grades to dense, increase in gravel content to about 10%.*	14.6	

URS

Project: Swan Lake Facility Improvement
Project Location: Swan Lake, Kotzebue, AK
Project Number: 26220926

Log of Boring URS-01-11

Elevation, feet	Depth, feet	SAMPLES Type	Number	Sampling Resistance, Blows/12 in.	Recovery (in.)	Graphic Log	Lithologic Log (USCS Code)	MATERIAL DESCRIPTION	Moisture Content, %	REMARKS AND OTHER TESTS
	65						SM	**SILTY SAND**, dark brown, wet, medium dense, fine to coarse sand, fine subrounded gravel.		
							SP-SM	**POORLY GRADED SAND WITH SILT**, dark brown, low plasticity, wet, dense, fine sand, about 10% subrounded gravel up to 1/4" diameter.		
-65			16	50	6		CL	**SILTY CLAY WITH SAND**, dark brown, low plasticity, wet, hard, fine to coarse sand, fine subangular gravel.	15.8	
	70							Boring terminated at a depth of 70.0 feet bgs on 3-31-2011 and backfilled with soil cuttings upon completion.		
-70										
	75									
-75										
	80									
-80										
	85									
-85										
	90									
-90										
	95									
-95										
	100									

URS

Project: Swan Lake Facility Improvement **Project Location:** Swan Lake, Kotzebue, AK **Project Number:** 26220926	**Log of Boring URS-02-11** Sheet 1 of 2

Date(s) Drilled	**3-28-2011**	Logged By	**J. Dabkowski**	Checked By	**C. Vita**
Drilling Method	**Hollow Stem Auger**	Drill Bit Size/Type	**4 1/4" O.D.**	Total Depth of Borehole	**47.5 feet**
Drill Rig Type	**D-40 Skid Rig**	Drilling Contractor	**Denali Drilling**	Approximate Surface Elevation	**-2.5 feet MSL**
Groundwater Level and Date Measured	**Not Measured**	Sampling Method(s)	**SPT**	Hammer Data	**140lb Manual**
Borehole Backfill	**Soil Cuttings**	Location	**N 66° 53.837' W 162° 34.767'**		

Elevation, feet	Depth, feet	SAMPLES Type	Number	Sampling Resistance, Blows/12 in.	Recovery (in.)	Graphic Log	Lithologic Log (USCS Code)	MATERIAL DESCRIPTION Comments:	Moisture Content, %	REMARKS AND OTHER TESTS
	0						SP	**POORLY GRADED SAND WITH GRAVEL**, dark brown, frozen, coarse sand, subrounded to subangular gravel.		3.5 feet snow and ice.
-5			1	36	18		SM	**SILTY SAND**, dark brown, wet, dense, fine to medium sand with some peat.	101.8	
	5		2	18	18			*Grades to fine sand.*	27.3	
-10			3	29	18			*Soil temperature 28 degrees.*	24.5	
	10		4	10	18			*Trace seashells.*	26.3	
-15										
	15		5	8	18		ML	**SILT**, dark brown, non-plastic, wet, loose, with fine sand, trace fine organics.	36	
-20										
	20		6	14	18			*Grades with 1 small clam shell in sampler.*	37.8	
-25										
	25		7	13	18				39.4	
-30										
	30									

URS

Project: Swan Lake Facility Improvement
Project Location: Swan Lake, Kotzebue, AK
Project Number: 26220926

Log of Boring URS-02-11

Elevation, feet	Depth, feet	SAMPLES Type	Number	Sampling Resistance, Blows/12 in.	Recovery (in.)	Graphic Log	Lithologic Log (USCS Code)	MATERIAL DESCRIPTION	Moisture Content, %	REMARKS AND OTHER TESTS
	30						ML	**SANDY SILT**, dark brown, non-plastic, wet, very stiff to hard, fine grain. *Grades to hard. Soil temperature 28 degrees.*		
			8	30	18				24.1	
-35										
	35									
			9	40	18				23.9	
-40										
	40									
			10	34	18				25.2	
-45										
	45									
			11 12	33 30/6"	18 6			*Soil temperature 27 degrees. Striated dark brown and brown.*	36.6	Jar sample collected.
-50								Boring terminated at 47.5 feet bgs on 3-28-2011 and backfilled with soil cuttings upon completion.		
	50									
-55										
	55									
-60										
	60									
-65										
	65									

URS

Project: Swan Lake Facility Improvement
Project Location: Swan Lake, Kotzebue, AK
Project Number: 26220926

Log of Boring URS-03-11

Date(s) Drilled	4-1-2011	Logged By	J. Dabkowski	Checked By	C. Vita
Drilling Method	Hollow Stem Auger	Drill Bit Size/Type	4 1/4" O.D.	Total Depth of Borehole	41.5 feet
Drill Rig Type	D-40 Skid Rig	Drilling Contractor	Denali Drilling	Approximate Surface Elevation	4.0 feet MSL
Groundwater Level and Date Measured	Not Measured	Sampling Method(s)	SPT	Hammer Data	140lb Manual
Borehole Backfill	Soil Cuttings	Location	N 66° 53.833' W 162° 34.926'		

Elevation, feet	Depth, feet	SAMPLES Type	Number	Sampling Resistance, Blows/12 in.	Recovery (in.)	Graphic Log	Lithologic Log (USCS Code)	MATERIAL DESCRIPTION Comments:	Moisture Content, %	REMARKS AND OTHER TESTS
	0						GP-GM	**POORLY GRADED GRAVEL WITH SILT AND SAND**, dark brown, frozen, fine angular gravel, fine to coarse sand.		
			1	50/2"	2				8.1	
0										
	5		2	50/2"	2				8	Driller encountered hard drilling (cobble), moved boring 6" to the west.
			3	50/6"	6		SM	**SILTY SAND**, brown to dark gray, frozen, fine to coarse sand.	20.9	
-5										
	10		4	24	18			*Grades to dark brown, some non-plastic silt, wet, medium dense, fine sand.*	25.2	
-10										
	15		5	20	18				28.6	
-15										
	20		6	10	18		ML	**SANDY SILT**, dark brown, non-plastic, wet, stiff, fine sand.	34.9	
-20										
	25		7	12	18		ML	**SILT**, dark brown, non-plastic, wet, stiff, some fine sand, trace fine organics.	39.6	
-25										
	30									

URS

Project: Swan Lake Facility Improvement
Project Location: Swan Lake, Kotzebue, AK
Project Number: 26220926

Log of Boring URS-03-11

Elevation, feet	Depth, feet	SAMPLES Type	Number	Sampling Resistance, Blows/12 in.	Recovery (in.)	Graphic Log	Lithologic Log (USCS Code)	MATERIAL DESCRIPTION	Moisture Content, %	REMARKS AND OTHER TESTS
	30		8	25	18		ML	**SILT**, dark brown, non-plastic, wet, very stiff, some fine sand.	32.5	
-30										
	35		9	26	18				32.6	
-35										
	40		10	32	18				27.6	
								Boring terminated at 41.5 feet bgs on 4-1-2011 and backfilled with soil cuttings upon completion.		
-40										
	45									
-45										
	50									
-50										
	55									
-55										
	60									
-60										
	65									

URS

Project: Swan Lake Facility Improvement
Project Location: Swan Lake, Kotzebue, AK
Project Number: 26220926

Log of Boring URS-04-11

Date(s) Drilled	3-28-2011	Logged By	J. Dabkowski	Checked By	C. Vita
Drilling Method	Hollow Stem Auger	Drill Bit Size/Type	4 1/4" O.D.	Total Depth of Borehole	8.0 feet
Drill Rig Type	D-40 Skid Rig	Drilling Contractor	Denali Drilling	Approximate Surface Elevation	-1.5 feet MSL
Groundwater Level and Date Measured	Not Measured	Sampling Method(s)	SPT	Hammer Data	140lb Manual
Borehole Backfill	Soil Cuttings	Location	N 66° 53.797' W 162° 34.656'		

Elevation, feet	Depth, feet	SAMPLES Type	Number	Sampling Resistance, Blows/12 in.	Recovery (in.)	Graphic Log	Lithologic Log (USCS Code)	MATERIAL DESCRIPTION (Comments:)	Moisture Content, %	REMARKS AND OTHER TESTS
	0						GP/ GP-GM	**POORLY GRADED GRAVEL**, dark brown, frozen, 1/2"-1/4" diameter, subrounded gravel.		2.0 feet snow and ice.
								POORLY GRADED GRAVEL WITH SILT AND SAND, dark brown, frozen, fine to coarse sand, subrounded to subangular fine gravel.		
			1	50/3"	3				9.4	
-5										
	5						ML	**SANDY SILT**, dark brown, frozen, fine grain sand.		
			2	76	18				28.2	
			3	50/6"	6				34.4 26	Jar sample collected.
-10								Boring terminated at 8.0 feet bgs on 3-28-2011 and backfilled with soil cuttings upon completion.		
	10									
-15										
	15									
-20										
	20									
-25										
	25									
-30										
	30									

URS

Project: Swan Lake Facility Improvement
Project Location: Swan Lake, Kotzebue, AK
Project Number: 26220926

Log of Boring URS-05-11

Date(s) Drilled	3-29-2011	Logged By	J. Dabkowski	Checked By	C. Vita
Drilling Method	Hollow Stem Auger	Drill Bit Size/Type	4 1/4" O.D.	Total Depth of Borehole	22.5 feet
Drill Rig Type	D-40 Skid Rig	Drilling Contractor	Denali Drilling	Approximate Surface Elevation	-8.0 feet MSL
Groundwater Level and Date Measured	Not Measured	Sampling Method(s)	SPT	Hammer Data	140lb Manual
Borehole Backfill	Soil Cuttings	Location	N 66° 53.712' W 162° 34.626'		

Elevation, feet	Depth, feet	SAMPLES Type	Number	Sampling Resistance, Blows/12 in.	Recovery (in.)	Graphic Log	Lithologic Log (USCS Code)	MATERIAL DESCRIPTION Comments:	Moisture Content, %	REMARKS AND OTHER TESTS
	0						ML	**SANDY SILT**, dark brown, non-plastic, wet, very stiff, fine sand, trace seashells.		8.5 feet snow and ice. No gravels observed while drilling.
-10			1	20	18				26.2	
	5		2	11	12			**SILT WITH SAND**, dark brown, non-plastic, wet, stiff, fine to medium sand.	30.1	
-15			3	9	16			*4" peat layer*	43.7	
							ML	**SILT**, dark brown, non-plastic, wet, stiff, fine sand.		
	10									
-20			4	10	16				36.5	
	15									
-25			5	13	18				37.2	
	20									
-30			6	19	18		SM	**SILTY SAND**, dark brown, wet, medium dense, fine sand.	23	
								Boring terminated at 22.5 feet bgs on 3-29-2011 and backfilled with soil cuttings upon completion.		
	25									
-35										
	30									

URS

Project: Swan Lake Facility Improvement
Project Location: Swan Lake, Kotzebue, AK
Project Number: 26220926

Log of Boring URS-06-11

Sheet 1 of 1

Date(s) Drilled	3-29-2011	Logged By	J. Dabkowski	Checked By	C. Vita
Drilling Method	Hollow Stem Auger	Drill Bit Size/Type	4 1/4" O.D.	Total Depth of Borehole	24.0 feet
Drill Rig Type	D-40 Skid Rig	Drilling Contractor	Denali Drilling	Approximate Surface Elevation	-3.0 feet MSL
Groundwater Level and Date Measured	Not Measured	Sampling Method(s)	SPT	Hammer Data	140lb Manual
Borehole Backfill	Soil Cuttings	Location	N 66° 53.710 W 162° 34.639'		

Elevation, feet	Depth, feet	SAMPLES Type	Number	Sampling Resistance, Blows/12 in.	Recovery (in.)	Graphic Log	Lithologic Log (USCS Code)	MATERIAL DESCRIPTION Comments:	Moisture Content, %	REMARKS AND OTHER TESTS
	0		1	50/6"	4		SP-SM	**POORLY GRADED SAND WITH SILT**, brown-dark brown (mottled), frozen, fine to coarse sand, fine gravel.	13.1	2.5 feet snow and ice.
-5			2	50/6"	12			**PEAT**, dark brown, frozen, some fine sand.	205.6	
	5		3	72	18		SM	**SILTY SAND**, dark brown, frozen, fine to coarse sand, with some fine gravel.	27.4	
-10			4	6 50/6"	12			*Grades to fine to medium grain sand with trace fine organics. 4" peat layer.*	56.2	
	10							*Grades to wet at 9.5 feet bgs for about 6".*		
-15			5	35	18		ML	**SILT WITH SAND**, dark brown, non-plastic, frozen, fine sand.	29.8	
	15									
-20			6	20	18		ML	**SILT**, dark brown, non-plastic, frozen, with some fine sand.	35.1	
	20									
-25			7	14	18				39.5	
								Grades to wet at about 23.5 feet bgs.		
	25							Boring terminated at 24.0 feet bgs on 3-29-2011 and backfilled with soil cuttings upon completion.		
-30										
	30									

URS

Project: Swan Lake Facility Improvement **Project Location:** Swan Lake, Kotzebue, AK **Project Number:** 26220926	**Log of Boring URS-07-11** Sheet 1 of 2

Date(s) Drilled	**3-29-2011**	Logged By	**J. Dabkowski**	Checked By	**C. Vita**
Drilling Method	**Hollow Stem Auger**	Drill Bit Size/Type	**4 1/4" O.D.**	Total Depth of Borehole	**48.5 feet**
Drill Rig Type	**D-40 Skid Rig**	Drilling Contractor	**Denali Drilling**	Approximate Surface Elevation	**-6.5 feet MSL**
Groundwater Level and Date Measured	**Not Measured**	Sampling Method(s)	**SPT**	Hammer Data	**140lb Manual**
Borehole Backfill	**Soil Cuttings**	Location	**N 66° 53.714' W 162° 34.608'**		

Elevation, feet	Depth, feet	SAMPLES Type	Number	Sampling Resistance, Blows/12 in.	Recovery (in.)	Graphic Log	Lithologic Log (USCS Code)	MATERIAL DESCRIPTION Comments:	Moisture Content, %	REMARKS AND OTHER TESTS
	0						SP	**POORLY GRADED SAND WITH GRAVEL**, dark brown, frozen, medium sand, 40% gravel, subrounded to subangular.		2.5 feet snow and ice.
			1	50/3"	3			*Decrease in gravel content.*	6.2	
-10										
	5		2	23	18		GM	**SILTY GRAVEL WITH SAND**, dark gray, wet, medium dense, subangular fine to coarse gravel, fine to coarse sand. *Increase in gravel content.*	15.1	
								10" peat layer.		
-15			3	18	18		SM	**SILTY SAND**, dark brown, wet, medium dense, fine grained, trace organics.	172.1	
	10									
			4	9	18		ML	**SILT**, dark brown, non-plastic, wet, stiff, some fine sand, trace seashells.	34.1	
-20										
	15									
			5	14	18				37.8	
-25										
	20									
			6	18	18				36	
-30										
	25									
-35										
	30									

URS

Project: Swan Lake Facility Improvement
Project Location: Swan Lake, Kotzebue, AK
Project Number: 26220926

Log of Boring URS-07-11

Elevation, feet	Depth, feet	SAMPLES Type	Number	Sampling Resistance, Blows/12 in.	Recovery (in.)	Graphic Log	Lithologic Log (USCS Code)	MATERIAL DESCRIPTION	Moisture Content, %	REMARKS AND OTHER TESTS
	30						ML	**SILT WITH SAND**, dark brown, non-plastic, wet, medium dense.		
-40			7	35	18			*Grades to hard, no seashells.*	32	
	35									
-45										
	40									
-50										
	45									
			8	22	18		SP	**POORLY GRADED SAND**, dark brown, wet, medium dense, coarse grain.	17	
-55							ML	**SILT**, dark brown, medium plasticity, moist, very stiff.		
								Boring terminated at 48.5 feet bgs on 3-29-2011 and backfilled with soil cuttings upon completion.		
	50									
-60										
	55									
-65										
	60									
-70										
	65									

URS

Project: Swan Lake Facility Improvement
Project Location: Swan Lake, Kotzebue, AK
Project Number: 26220926

Log of Boring URS-08-11

Date(s) Drilled	**3-30-2011**	Logged By	**J. Dabkowski**	Checked By	**C. Vita**
Drilling Method	**Hollow Stem Auger**	Drill Bit Size/Type	**4 1/4" O.D.**	Total Depth of Borehole	**51.3 feet**
Drill Rig Type	**D-40 Skid Rig**	Drilling Contractor	**Denali Drilling**	Approximate Surface Elevation	**6.0 feet MSL**
Groundwater Level and Date Measured	**Not Measured**	Sampling Method(s)	**SPT**	Hammer Data	**140lb Manual**
Borehole Backfill	**Soil Cuttings**	Location	**N 66° 53.709' W 162° 34.527'**		

Elevation, feet	Depth, feet	SAMPLES Type	Number	Sampling Resistance, Blows/12 in.	Recovery (in.)	Graphic Log	Lithologic Log (USCS Code)	MATERIAL DESCRIPTION (Comments:)	Moisture Content, %	REMARKS AND OTHER TESTS
	0						SW-SM	**WELL-GRADED SAND WITH SILT AND GRAVEL**, brown, frozen, fine to coarse sand, subangular to subrounded fine gravel.		2-3 inches of snow.
5			1	50/2"	2				10.6	
	5		2	50/3"	3		SM	**SILTY SAND WITH GRAVEL**, brown, frozen, fine to coarse sand, fine angular gravel.	18.8	
0			3	50/6"	6		SP-SM	**POORLY GRADED SAND WITH SILT AND GRAVEL**, brown, frozen, ice crystals, fine to coarse sand, subangular to angular fine gravel.	12.8	
	10		4	15 50/6"	12			*Grades to dark brown.*	103.9	
-5										
	15		5	36 50/6"	12			*Sand becomes fine grain, no gravel encountered.*	30	
-10										
	20		6	27	18		ML	**SILT**, dark brown, non-plastic, frozen, very stiff, fine sand, occasional seashells, trace organics.	43.5	
-15								*Peat observed in cuttings.*		
	25		7	72	18				25	
-20										
	30									

URS

Project: Swan Lake Facility Improvement
Project Location: Swan Lake, Kotzebue, AK
Project Number: 26220926

Log of Boring URS-08-11

Elevation, feet	Depth, feet	SAMPLES Type	Number	Sampling Resistance, Blows/12 in.	Recovery (in.)	Graphic Log	Lithologic Log (USCS Code)	MATERIAL DESCRIPTION	Moisture Content, %	REMARKS AND OTHER TESTS
	30						ML	**SILT WITH SAND**, dark brown, non-plastic, frozen, fine to medium sand.		
-25			8	88	18				30	
	35									
-30			9	45	18					
	40									
-35			10	54	18				29	
	45						ML	**SILT**, dark brown, non-plastic, frozen, trace fine sand.		
-40			11	49	18				33	
	50						SM	**SILTY SAND WITH GRAVEL**, dark brown, wet, dense, fine to coarse sand, fine gravel, trace fine organics.		
-45			12	34	15				21	
								Boring terminated at 51.25 feet bgs on 3-30-2011 and backfilled with soil cuttings upon completion.		
-50	55									
-55	60									
	65									

URS

Project: Swan Lake Facility Improvement **Project Location:** Swan Lake, Kotzebue, AK **Project Number:** 26220926	**Log of Boring URS-09-11** Sheet 1 of 2

Date(s) Drilled	**3-30-2011**	Logged By	**J. Dabkowski**	Checked By	**C. Vita**
Drilling Method	**Hollow Stem Auger**	Drill Bit Size/Type	**4 1/4" O.D.**	Total Depth of Borehole	**51.5 feet**
Drill Rig Type	**D-40 Skid Rig**	Drilling Contractor	**Denali Drilling**	Approximate Surface Elevation	**3.0 feet MSL**
Groundwater Level and Date Measured	**Not Measured**	Sampling Method(s)	**SPT**	Hammer Data	**140lb Manual**
Borehole Backfill	**Soil Cuttings**	Location	**N 66° 53.714' W 162° 34.666'**		

Elevation, feet	Depth, feet	SAMPLES Type	Number	Sampling Resistance, Blows/12 in.	Recovery (in.)	Graphic Log	Lithologic Log (USCS Code)	MATERIAL DESCRIPTION Comments:	Moisture Content, %	REMARKS AND OTHER TESTS
	0						GP	**POORLY GRADED GRAVEL**, dark brown, frozen, 1/2" to 1" in diameter.		1/2" snow.
							SM	**SILTY SAND WITH GRAVEL**, dark brown, frozen, fine to coarse sand, rounded to subrounded fine to coarse gravel.		
0			1	50/3"	3				17.4	
	5		2	46 50/3"	9			**PEAT WITH SAND**, dark brown, frozen, fine sand.	122	
							ML	**SILT WITH SAND**, dark brown, frozen, fine sand, with some organics.		
-5			3	66	18			*Grades to dark brown,.*	82.8	
	10		4	50/3"	3				26	
-10										
	15		5	50/6"	6				27	
-15										
	20		6	30	18				38	
-20										
	25		7	44	18			*One shell in sampler.*	34	
-25										
	30									

URS

Project: Swan Lake Facility Improvement
Project Location: Swan Lake, Kotzebue, AK
Project Number: 26220926

Log of Boring URS-09-11

Elevation, feet	Depth, feet	SAMPLES Type	Number	Sampling Resistance, Blows/12 in.	Recovery (in.)	Graphic Log	Lithologic Log (USCS Code)	MATERIAL DESCRIPTION	Moisture Content, %	REMARKS AND OTHER TESTS
	30		8	38	18		ML	**SILT**, dark brown, non-plastic, frozen, with some fine to medium sand.	33	
-30										
	35		9	48 50/6"	12				25	
-35										
	40		10	50/4"	4			**PEAT**, dark brown, wet, hard, (partially frozen).	38.2	
-40										Driller notes water at 42.0 feet bgs.
	45		11	22	18		SM	**SILTY SAND**, dark brown, wet, medium dense, fine sand.	7	
							SP	**POORLY GRADED SAND**, brown, wet, medium dense, coarse sand.		
							GP	**POORLY GRADED GRAVEL**, dark brown, wet, medium dense, subangular to subrounded, 5-10% sand and silt.		
-45							SP	**POORLY GRADED SAND**, dark brown, wet, dense. Grades from fine sand at 50.0 feet to coarse at 50.5 feet to 1/4" gravel at 51.0 feet, angular gravel.	36.6	Jar sample collected.
	50		12	33	18				9	
-50								Boring terminated at 51.5 feet bgs on 3-30-2011 and backfilled with soil cuttings upon completion.		
	55									
-55										
	60									
-60										
	65									

URS

Project: Swan Lake Facility Improvement
Project Location: Swan Lake, Kotzebue, AK
Project Number: 26220926

Log of Boring URS-10-11

Date(s) Drilled	3-31-2011	Logged By	J. Dabkowski	Checked By	C. Vita
Drilling Method	Hollow Stem Auger	Drill Bit Size/Type	4 1/4" O.D.	Total Depth of Borehole	9.5 feet
Drill Rig Type	D-40 Skid Rig	Drilling Contractor	Denali Drilling	Approximate Surface Elevation	-8.0 feet MSL
Groundwater Level and Date Measured	Not Measured	Sampling Method(s)	SPT	Hammer Data	140lb Manual
Borehole Backfill	Soil Cuttings	Location	N 66° 53.787' W 162° 34.851'		

Elevation, feet	Depth, feet	SAMPLES Type	Number	Sampling Resistance, Blows/12 in.	Recovery (in.)	Graphic Log	Lithologic Log (USCS Code)	MATERIAL DESCRIPTION Comments:	Moisture Content, %	REMARKS AND OTHER TESTS
	0						SM	**SILTY SAND**, dark brown, non-plastic, wet, stiff, fine sand.		5.0 feet ice. 23.0 feet water.
			1	9	12				28.5	
-10							ML	**SILT**, dark brown, non-plastic, wet, stiff, some fine sand, trace fine organics.		
			2	9	18				36	
	5									
			3	12	15				43.7	
-15										
			4	13	18				46	
	10							Boring terminated at 9.5 feet bgs on 3-31-2011 and backfilled with soil cuttings upon completion.		
-20										
	15									
-25										
	20									
-30										
	25									
-35										
	30									

URS

APPENDIX B

LABORATORY TEST RESULTS

COBBLES	GRAVEL		SAND			SILT OR CLAY
	coarse	fine	coarse	medium	fine	

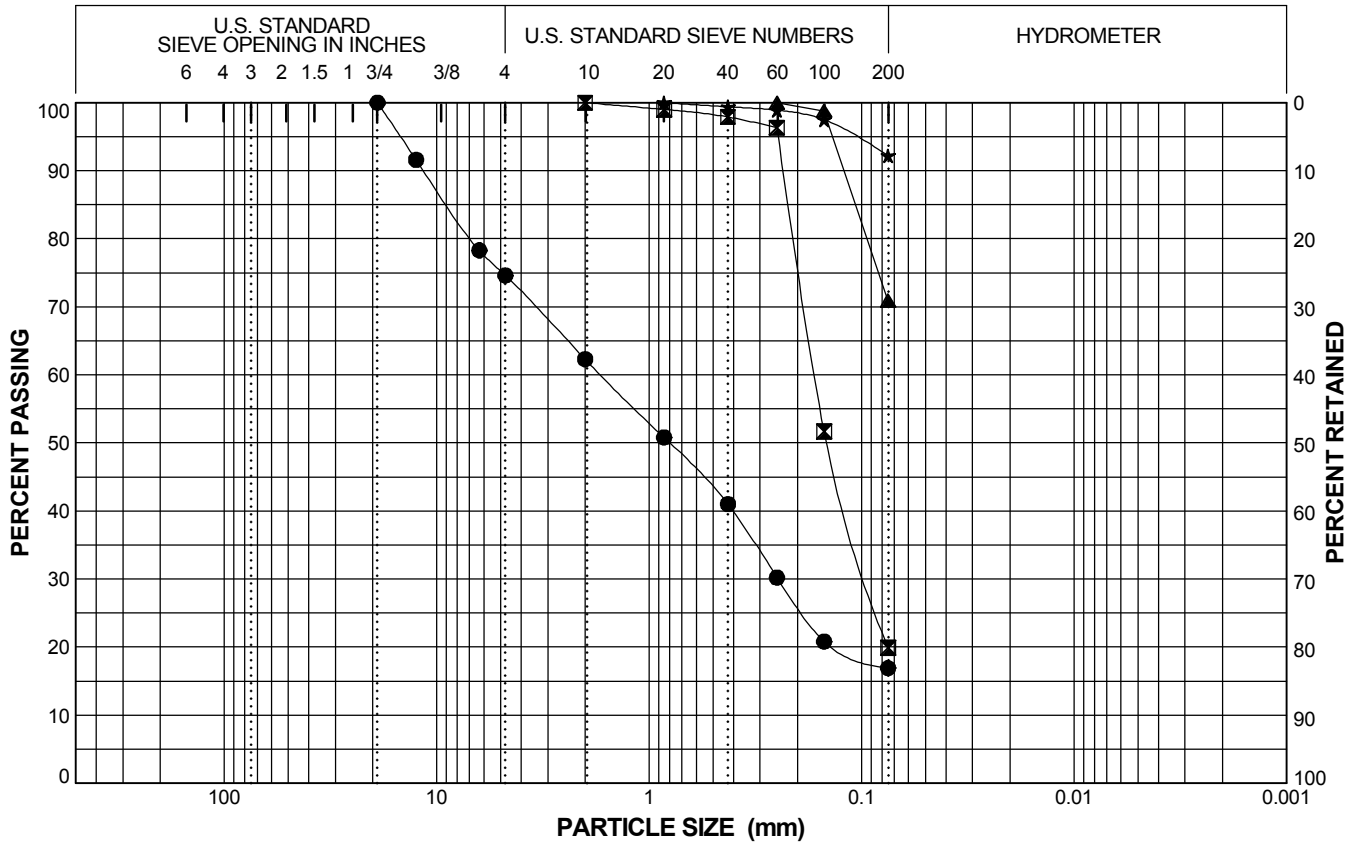

Boring ID	Sample #	Depth (feet)	Sample Moisture (%)	Dry Density (lbs/ft^3)	Symbol	LL	PI	% G	% S	% F	Classification
B-01-11	1&2	1.0-3.5'	17.1		●			25.4	57.7	16.9	Silty Sand with Gravel (SM)
B-01-11	3	6.0-6.33'	33.8		⊠			0.0	80.1	19.9	Silty Sand (SM)
B-01-11	5	13.5-15.0'	28.6		▲			0.0	29.1	70.9	Sandy Silt (ML)
B-01-11	6	18.5-20.0'	39.9		★			0.0	7.8	92.2	Silt (ML)

Swan Lake Facility Improvement
Swan Lake, Kotzebue, AK
26220926

PARTICLE SIZE DISTRIBUTION CURVES

URS

Report: SIEVE_4_PORT; File: SWAN LAKE ALASKA.GPJ; 5/6/2011 B-01-11

COBBLES	GRAVEL		SAND			SILT OR CLAY
	coarse	fine	coarse	medium	fine	

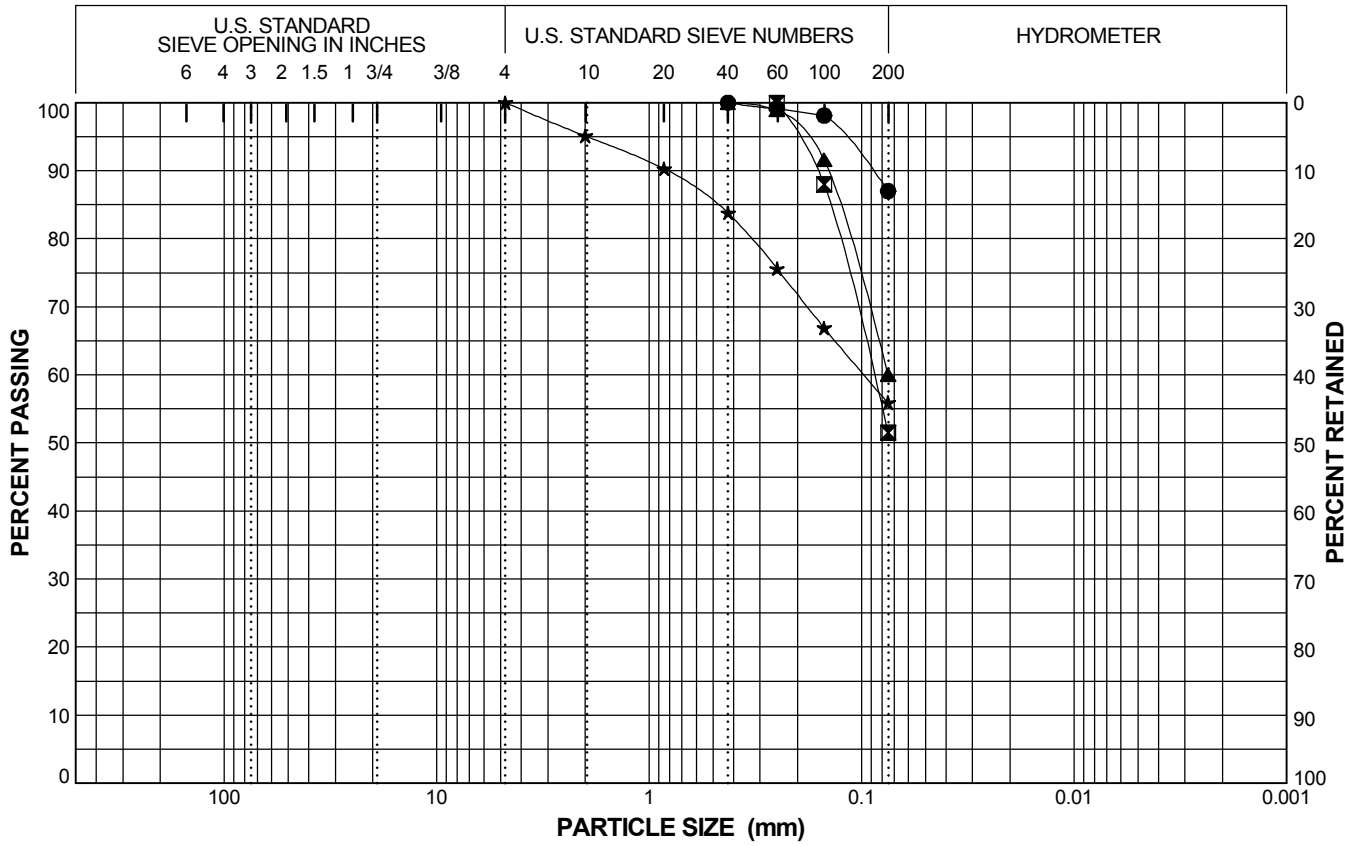

Boring ID	Sample #	Depth (feet)	Sample Moisture (%)	Dry Density (lbs/ft^3)	Symbol	LL	PI	% G	% S	% F	Classification
B-01-11	8	28.5-30.0'	34.0		●			0.0	13.0	87.0	Silt (ML)
B-01-11	9	32.5-35.0'	26.2		⊠			0.0	48.5	51.5	Sandy Silt (ML)
B-01-11	11	43.5-45.0'	24.1		▲			0.0	40.0	60.0	Sandy Silt (ML)
B-01-11	12	48.5-50.0'	158.1		★			0.0	44.1	55.9	Peat

Swan Lake Facility Improvement
Swan Lake, Kotzebue, AK
26220926

PARTICLE SIZE DISTRIBUTION CURVES

URS

Report: SIEVE_4_PORT; File: SWAN LAKE ALASKA.GPJ; 5/6/2011 B-01-11

COBBLES	GRAVEL		SAND			SILT OR CLAY
	coarse	fine	coarse	medium	fine	

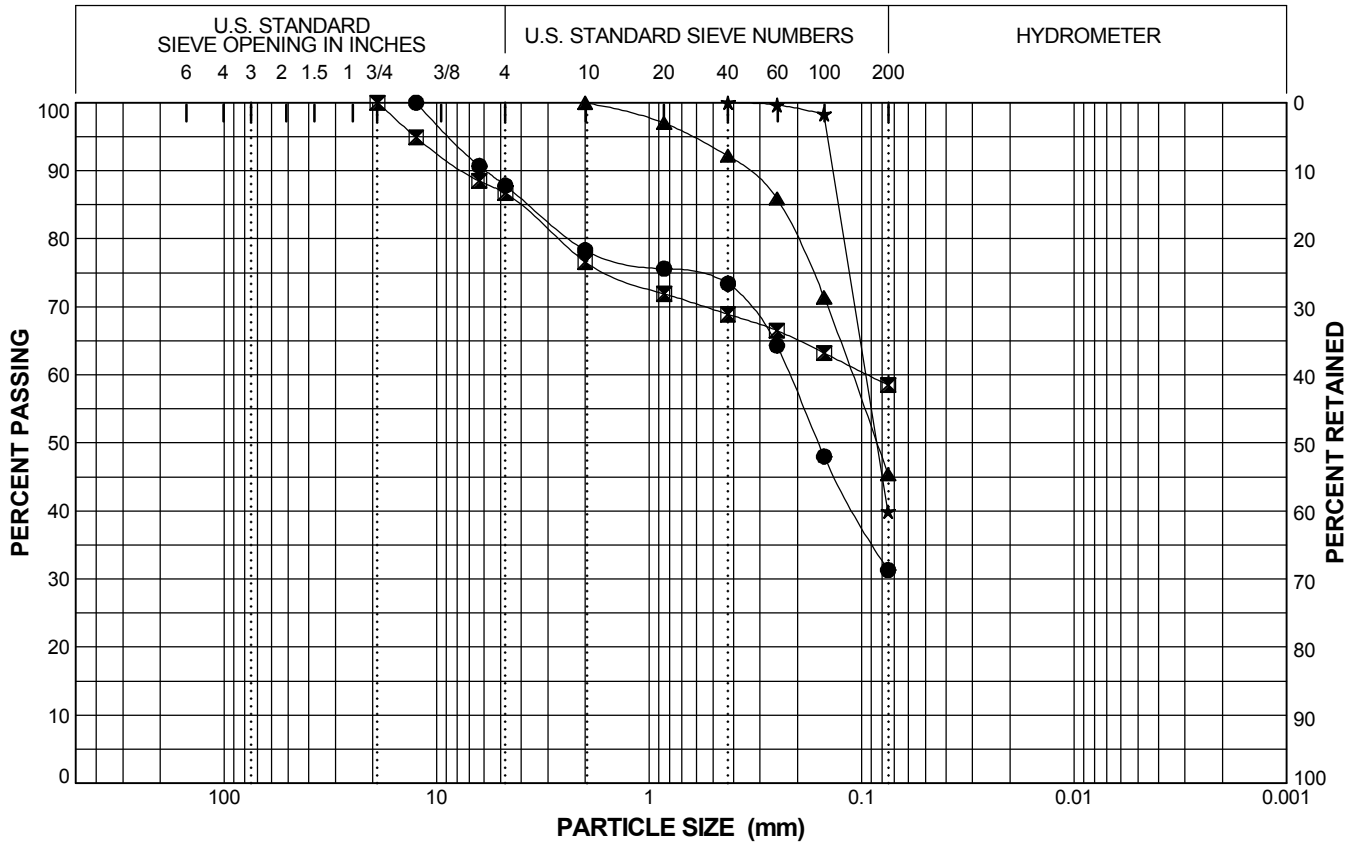

Boring ID	Sample #	Depth (feet)	Sample Moisture (%)	Dry Density (lbs/ft^3)	Symbol	LL	PI	% G	% S	% F	Classification
B-01-11	14	58.5-60.0'	13.8		●			12.2	56.5	31.3	Silty Sand (SM)
B-01-11	16	68.5-70.0	15.8		⊠			13.3	28.2	58.5	Silty Clay with Sand (CL)
B-02-11	1	2.5-4.0'	101.8		▲			0.0	54.6	45.4	Silty Sand with Peat (SM)
B-02-11	4	10.5-12.0'	26.3		★			0.0	60.1	39.9	Silty Sand (SM)

Swan Lake Facility Improvement
Swan Lake, Kotzebue, AK
26220926

PARTICLE SIZE DISTRIBUTION CURVES

URS

Report: SIEVE_4_PORT; File: SWAN LAKE ALASKA.GPJ; 5/6/2011 B-02-11

COBBLES	GRAVEL		SAND			SILT OR CLAY
	coarse	fine	coarse	medium	fine	

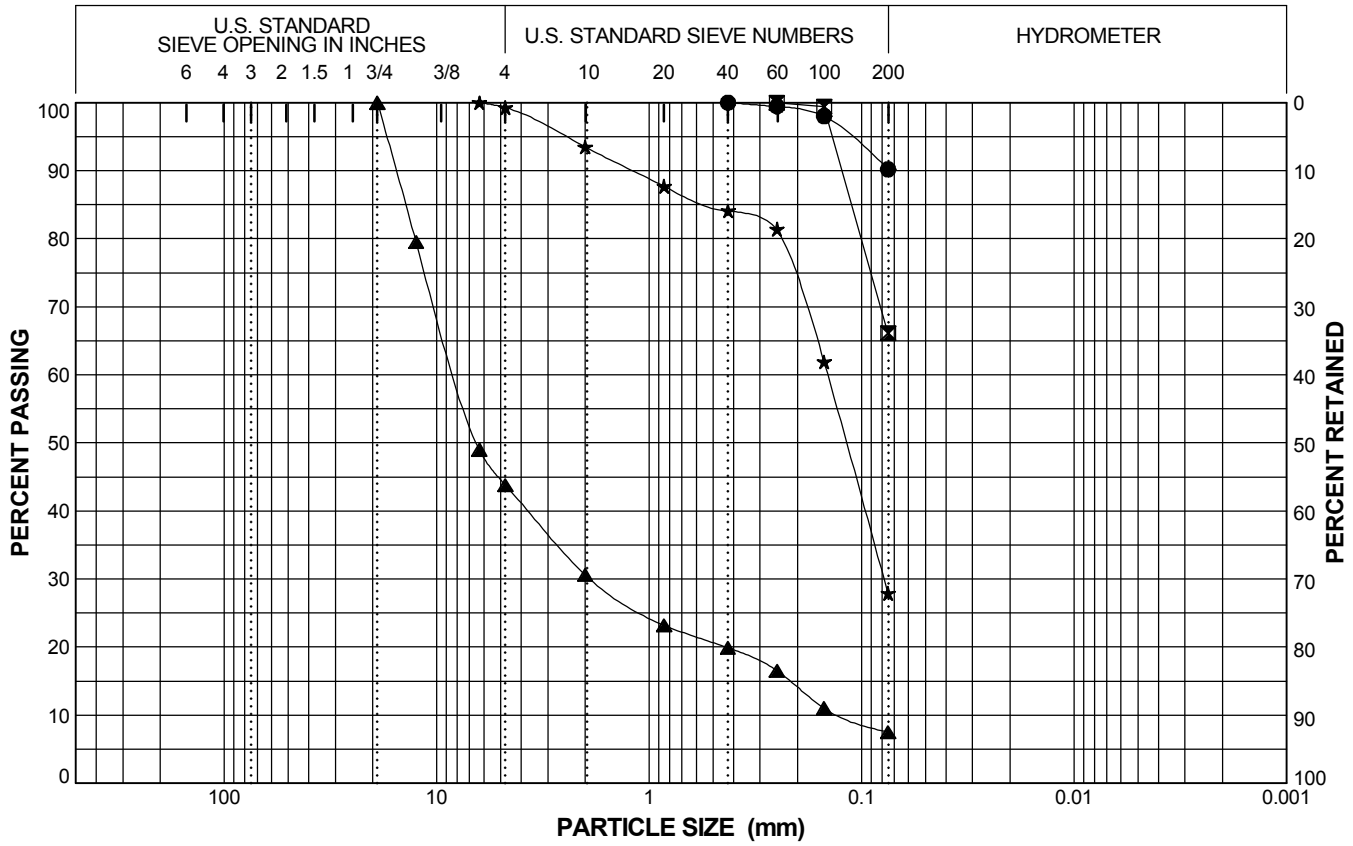

Boring ID	Sample #	Depth (feet)	Sample Moisture (%)	Dry Density (lbs/ft^3)	Symbol	LL	PI	% G	% S	% F	Classification
B-02-11	5	15.5-17.0'	36		●			0.0	9.8	90.2	Silt (ML)
B-02-11	10	40.5-42.0'	25.2		⊠			0.0	33.9	66.1	Silt (ML)
B-03-11	1&2	2.5-5.17'	8.1		▲			56.2	36.3	7.5	Poorly Graded Gravel with Silt and Sand (GP-GM)
B-03-11	3	7.5-8.0'	20.9		★			0.7	71.4	27.9	Silty Sand (SM)

Swan Lake Facility Improvement
Swan Lake, Kotzebue, AK
26220926

PARTICLE SIZE DISTRIBUTION CURVES

URS

Report: SIEVE_4_PORT; File: SWAN LAKE ALASKA.GPJ; 5/6/2011 B-03-11

COBBLES	GRAVEL		SAND			SILT OR CLAY
	coarse	fine	coarse	medium	fine	

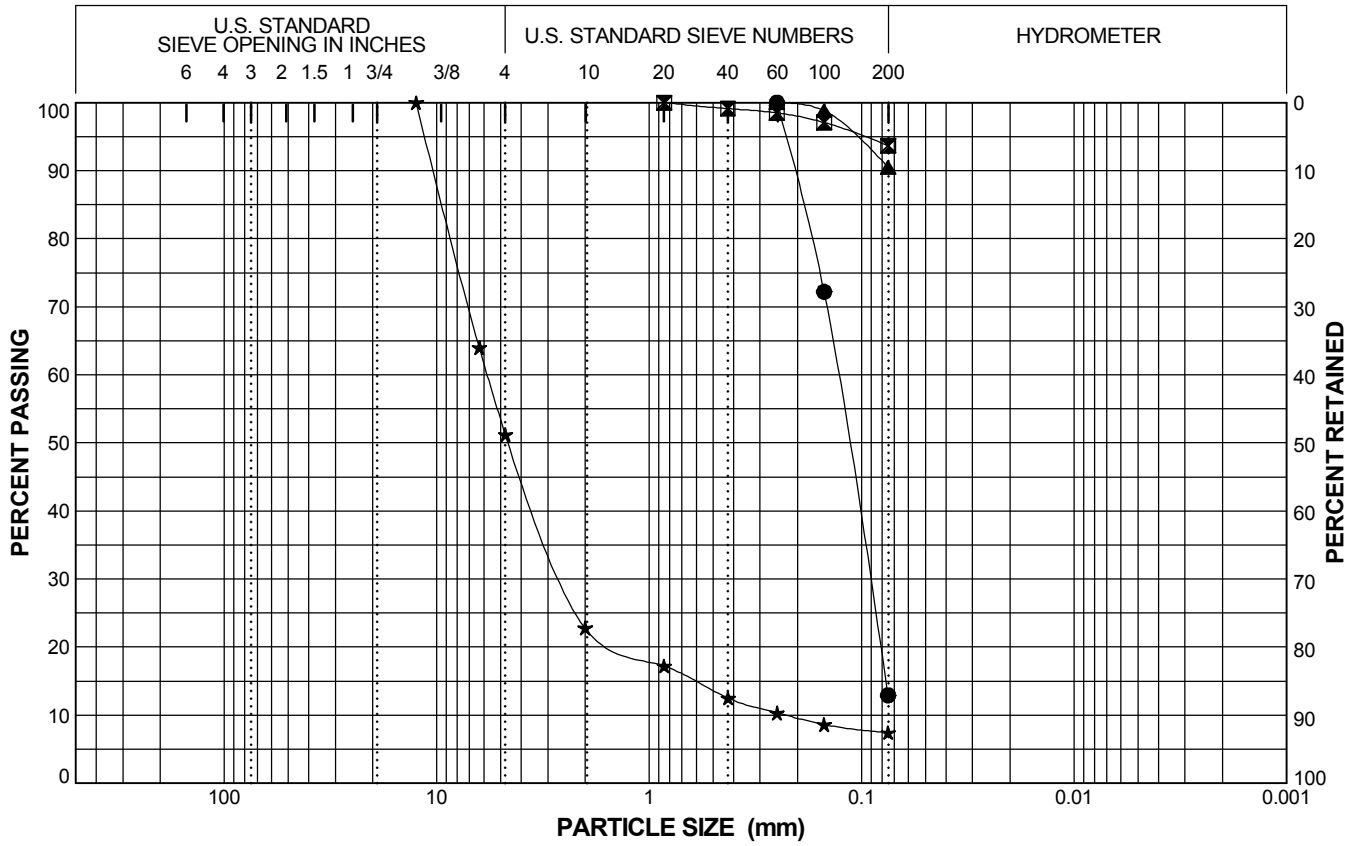

Boring ID	Sample #	Depth (feet)	Sample Moisture (%)	Dry Density (lbs/ft^3)	Symbol	LL	PI	% G	% S	% F	Classification
B-03-11	4	10.0-11.5'	25.2		●			0.0	87.1	12.9	Silty Sand (SM)
B-03-11	7	25.0-26.5'	39.6		⊠			0.0	6.3	93.7	Silt (ML)
B-03-11	9	35-36.5'	32.6		▲			0.0	9.5	90.5	Silt (ML)
B-04-11	1	2.7-2.95'	9.4		★			48.8	43.8	7.4	Poorly Graded Gravel with Silt and Sand (GP-GM)

Swan Lake Facility Improvement
Swan Lake, Kotzebue, AK
26220926

PARTICLE SIZE DISTRIBUTION CURVES

URS

Report: SIEVE_4_PORT; File: SWAN LAKE ALASKA.GPJ; 5/6/2011 B-04-11

COBBLES	GRAVEL		SAND			SILT OR CLAY
	coarse	fine	coarse	medium	fine	

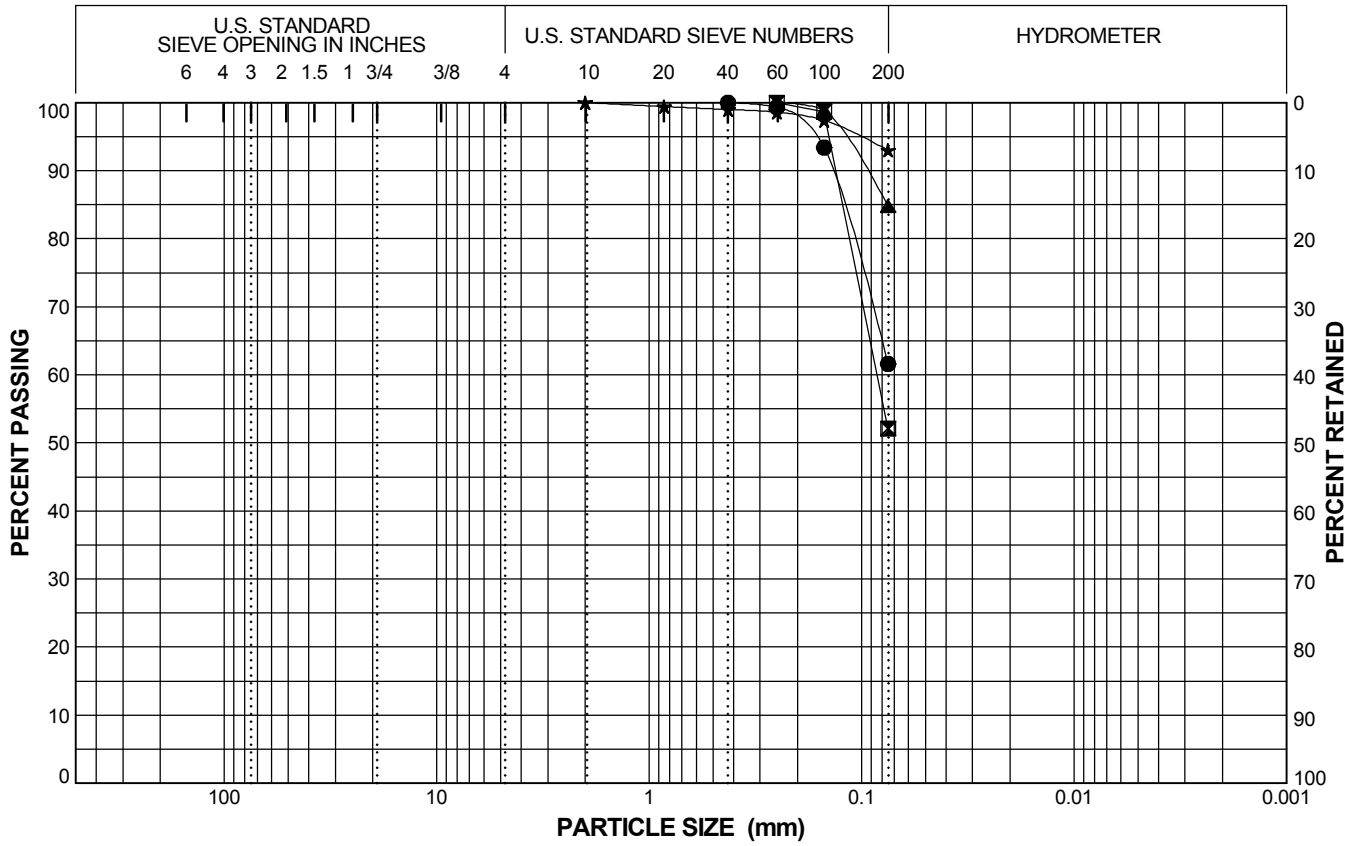

Boring ID	Sample #	Depth (feet)	Sample Moisture (%)	Dry Density (lbs/ft^3)	Symbol	LL	PI	% G	% S	% F	Classification
B-04-11	2	5.2-6.7	28.2		●			0.0	38.4	61.6	Sandy Silt (ML)
B-05-11	1	2.5-4.0'	26.2		⊠			0.0	47.9	52.1	Sandy Silt (ML)
B-05-11	2	5.0-6.5'	30.1		▲			0.0	15.2	84.8	Silt with Sand (ML)
B-05-11	3	7.5-9.0'	43.7		★			0.0	7.0	93.0	Silt (ML)

Swan Lake Facility Improvement
Swan Lake, Kotzebue, AK
26220926

PARTICLE SIZE DISTRIBUTION CURVES

URS

Report: SIEVE_4_PORT; File: SWAN LAKE ALASKA.GPJ; 5/6/2011 B-05-11

COBBLES	GRAVEL		SAND			SILT OR CLAY
	coarse	fine	coarse	medium	fine	

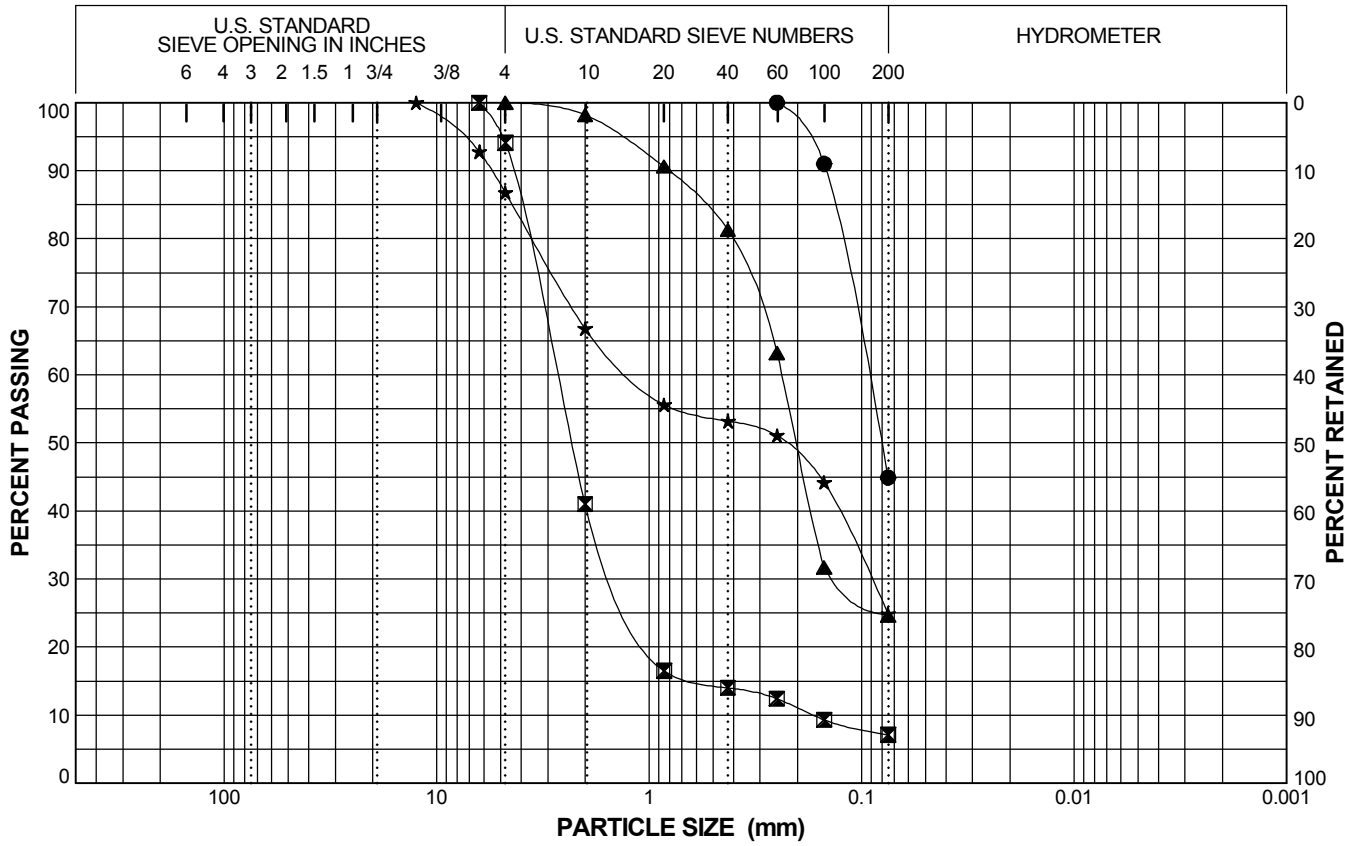

Boring ID	Sample #	Depth (feet)	Sample Moisture (%)	Dry Density (lbs/ft^3)	Symbol	LL	PI	% G	% S	% F	Classification
B-05-11	6	21.0-22.5'	23.0		●			0.0	55.1	44.9	Silty Sand (SM)
B-06-11	1	0.0-0.5'	13.1		⊠			5.9	87.0	7.1	Poorly Graded Sand with Silt (SP-SM)
B-06-11	2	2.5-3.5'	205.6		▲			0.0	75.4	24.6	Peat
B-06-11	3	5.0-6.5'	27.4		★			13.2	61.9	24.9	Silty Sand (SM)

Swan Lake Facility Improvement
Swan Lake, Kotzebue, AK
26220926

PARTICLE SIZE DISTRIBUTION CURVES

URS

Report: SIEVE_4_PORT; File: SWAN LAKE ALASKA.GPJ; 5/6/2011 B-06-11

COBBLES	GRAVEL		SAND			SILT OR CLAY
	coarse	fine	coarse	medium	fine	

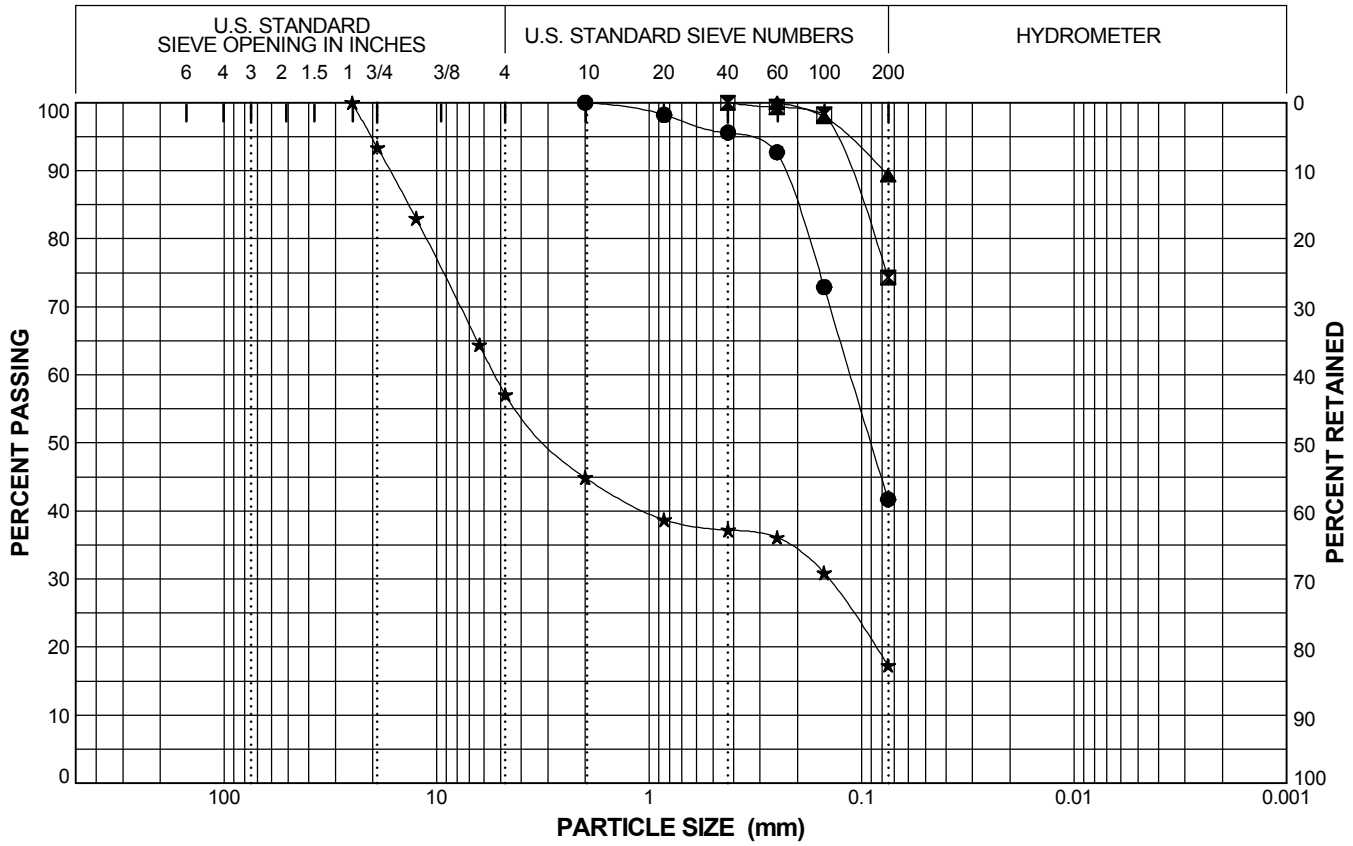

Boring ID	Sample #	Depth (feet)	Sample Moisture (%)	Dry Density (lbs/ft^3)	Symbol	LL	PI	% G	% S	% F	Classification
B-06-11	4	7.5-8.5'	56.2		●			0.0	58.3	41.7	Silty Sand (SM)
B-06-11	5	12.5-14.0'	29.8		⊠			0.0	25.7	74.3	Silt with Sand (ML)
B-06-11	6	17.5-19.0'	35.1		▲	36	3	0.0	10.7	89.3	Silt (ML)
B-07-11	2	4.5-6.0'	15.1		★			42.9	39.8	17.3	Silty Gravel with Sand (GM)

Swan Lake Facility Improvement
Swan Lake, Kotzebue, AK
26220926

PARTICLE SIZE DISTRIBUTION CURVES

URS

Report: SIEVE_4_PORT; File: SWAN LAKE ALASKA.GPJ; 5/6/2011 B-07-11

COBBLES	GRAVEL		SAND			SILT OR CLAY
	coarse	fine	coarse	medium	fine	

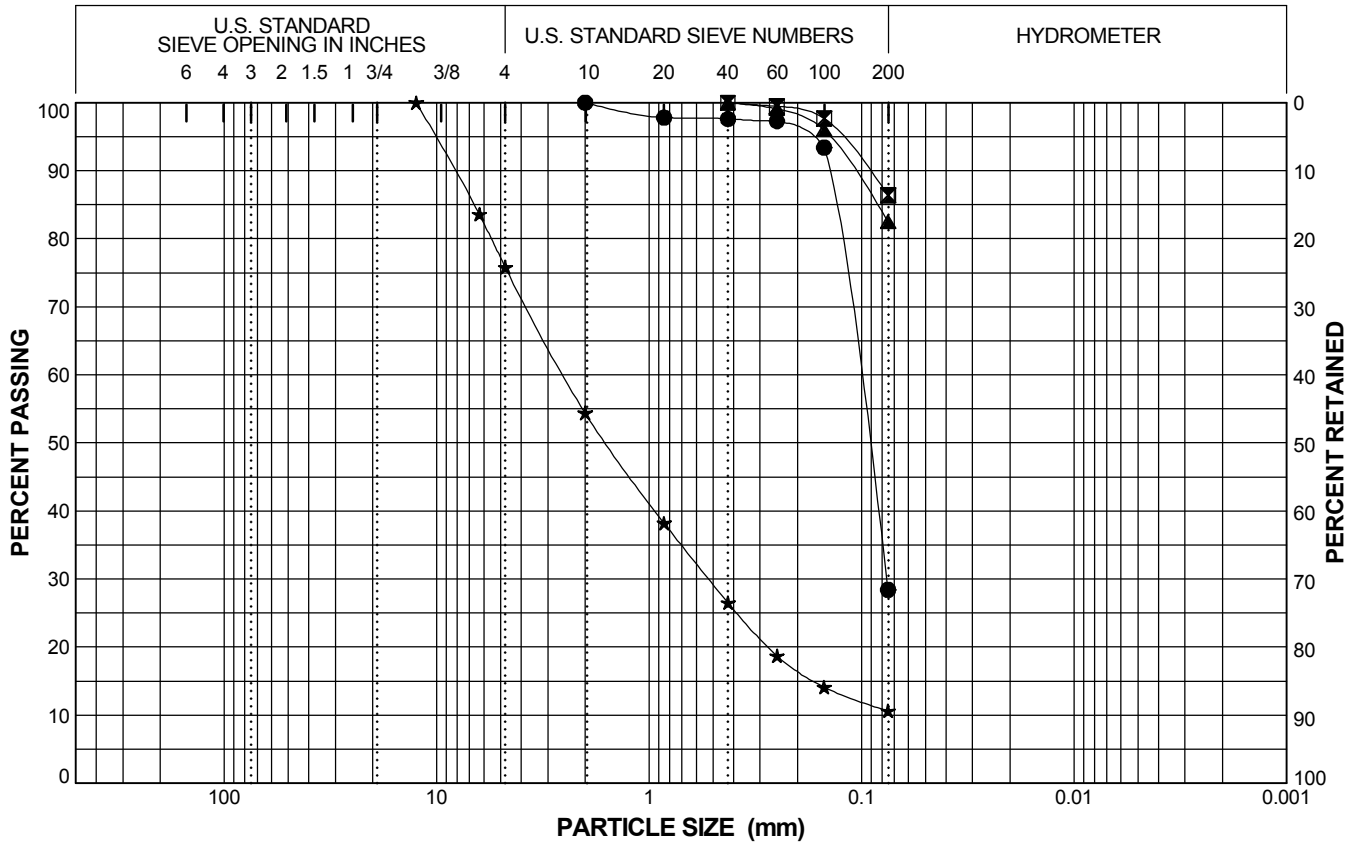

Boring ID	Sample #	Depth (feet)	Sample Moisture (%)	Dry Density (lbs/ft^3)	Symbol	LL	PI	% G	% S	% F	Classification
B-07-11	3b	7.5-9.0'	29.5		●			0.0	71.6	28.4	Silty Sand (SM)
B-07-11	4	12.0-13.5'	29.5		⊠			0.0	13.6	86.4	Silt (ML)
B-07-11	7	32.5-34.0'	32.3		▲			0.0	17.5	82.5	Silt with Sand (ML)
B-08-11	1	2.5-2.67'	10.6		★			24.2	65.2	10.6	Well-Graded Sand with Silt and Gravel (SW_SM)

Report: SIEVE_4_PORT; File: SWAN LAKE ALASKA.GPJ; 5/6/2011 B-08-11

Swan Lake Facility Improvement
Swan Lake, Kotzebue, AK
26220926

PARTICLE SIZE DISTRIBUTION CURVES

URS

COBBLES	GRAVEL		SAND			SILT OR CLAY
	coarse	fine	coarse	medium	fine	

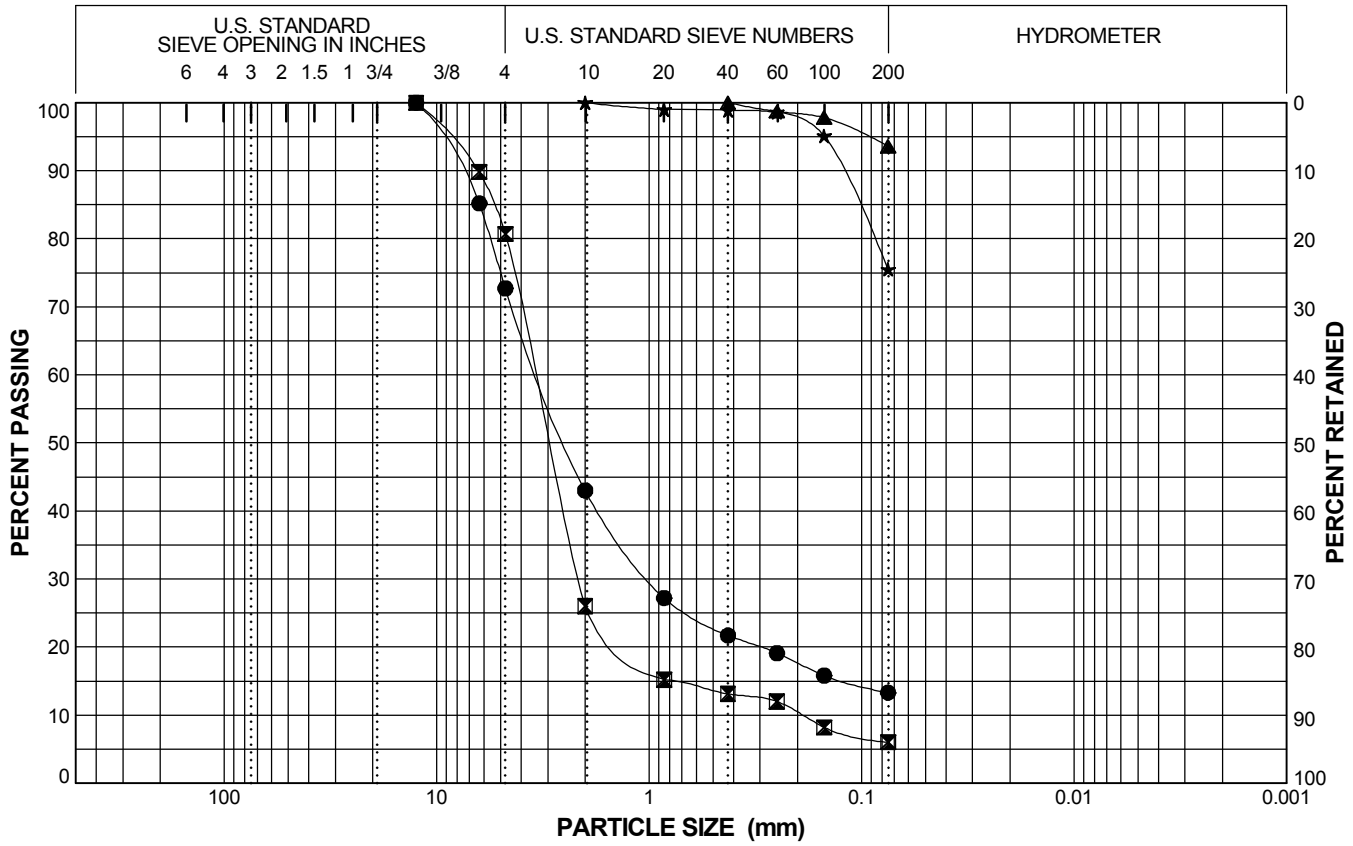

Boring ID	Sample #	Depth (feet)	Sample Moisture (%)	Dry Density (lbs/ft^3)	Symbol	LL	PI	% G	% S	% F	Classification
B-08-11	2	5.0-5.25'	18.8		●			27.3	59.4	13.3	Silty Sand with Gravel (SM)
B-08-11	3	7.5-8.0'	12.8		⊠			19.3	74.7	6.0	Poorly Graded Sand with Silt and Gravel (SP_SM)
B-08-11	6	20.0-21.5'	43.5		▲			0.0	6.4	93.6	Silt (ML)
B-08-11	8	30-31.5'	29.5		★			0.0	24.5	75.5	Silt with Sand (ML)

Swan Lake Facility Improvement
Swan Lake, Kotzebue, AK
26220926

PARTICLE SIZE DISTRIBUTION CURVES

URS

COBBLES	GRAVEL		SAND			SILT OR CLAY
	coarse	fine	coarse	medium	fine	

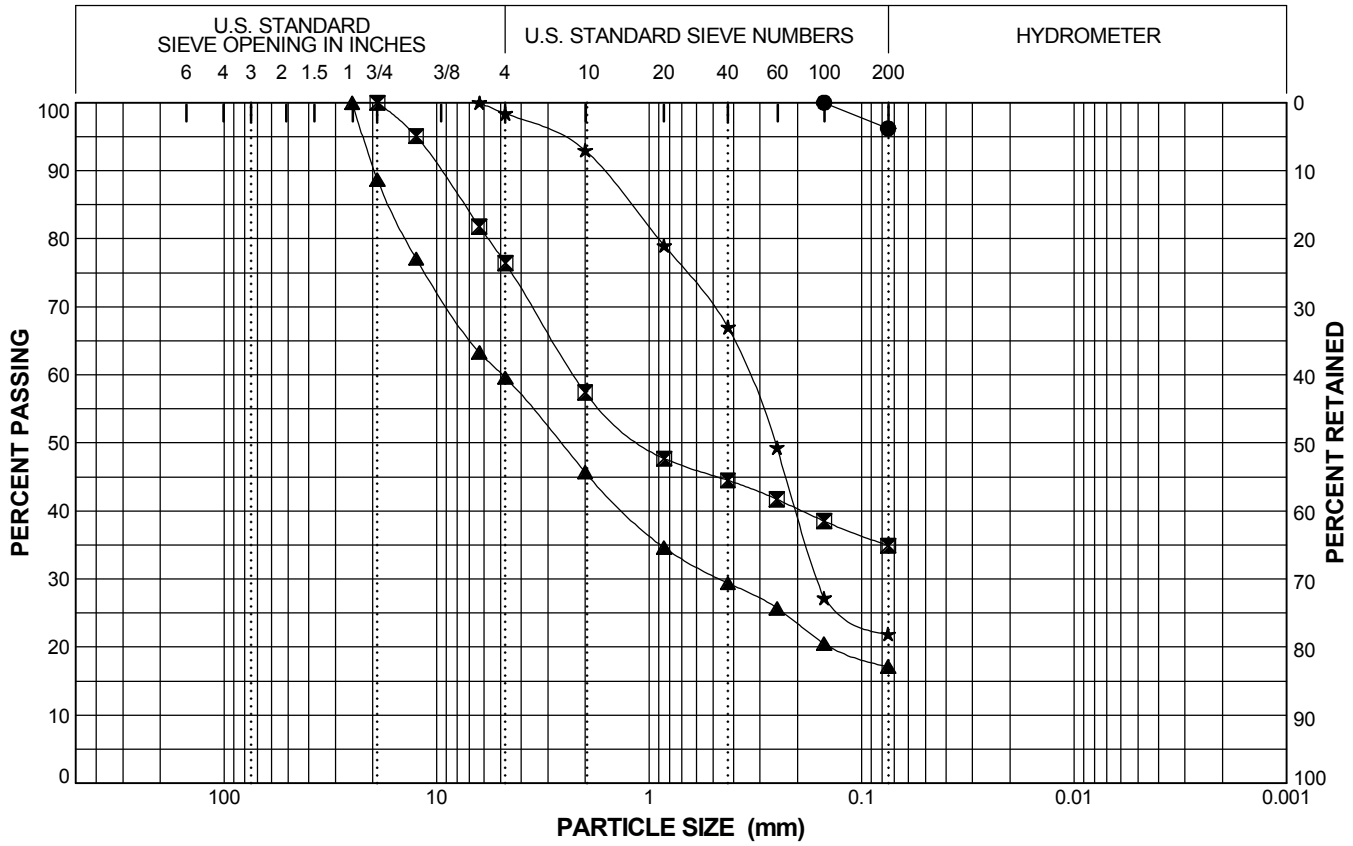

Boring ID	Sample #	Depth (feet)	Sample Moisture (%)	Dry Density (lbs/ft^3)	Symbol	LL	PI	% G	% S	% F	Classification
B-08-11	11	45-46.5	32.6		●			0.0	3.8	96.2	Silt (ML)
B-08-11	12	50.0-51.25'	20.6		⊠			23.6	41.5	34.9	Silty Sand with Gravel (SM)
B-09-11	1	2.25-2.5'	17.4		▲			40.4	42.5	17.1	Silty Sand with Gravel (SM)
B-09-11	2	4.75-5.5'	122.0		★			1.6	76.5	21.9	Peat

Swan Lake Facility Improvement
Swan Lake, Kotzebue, AK
26220926

PARTICLE SIZE DISTRIBUTION CURVES

URS

Report: SIEVE_4_PORT; File: SWAN LAKE ALASKA.GPJ; 5/6/2011 B-09-11

COBBLES	GRAVEL		SAND			SILT OR CLAY
	coarse	fine	coarse	medium	fine	

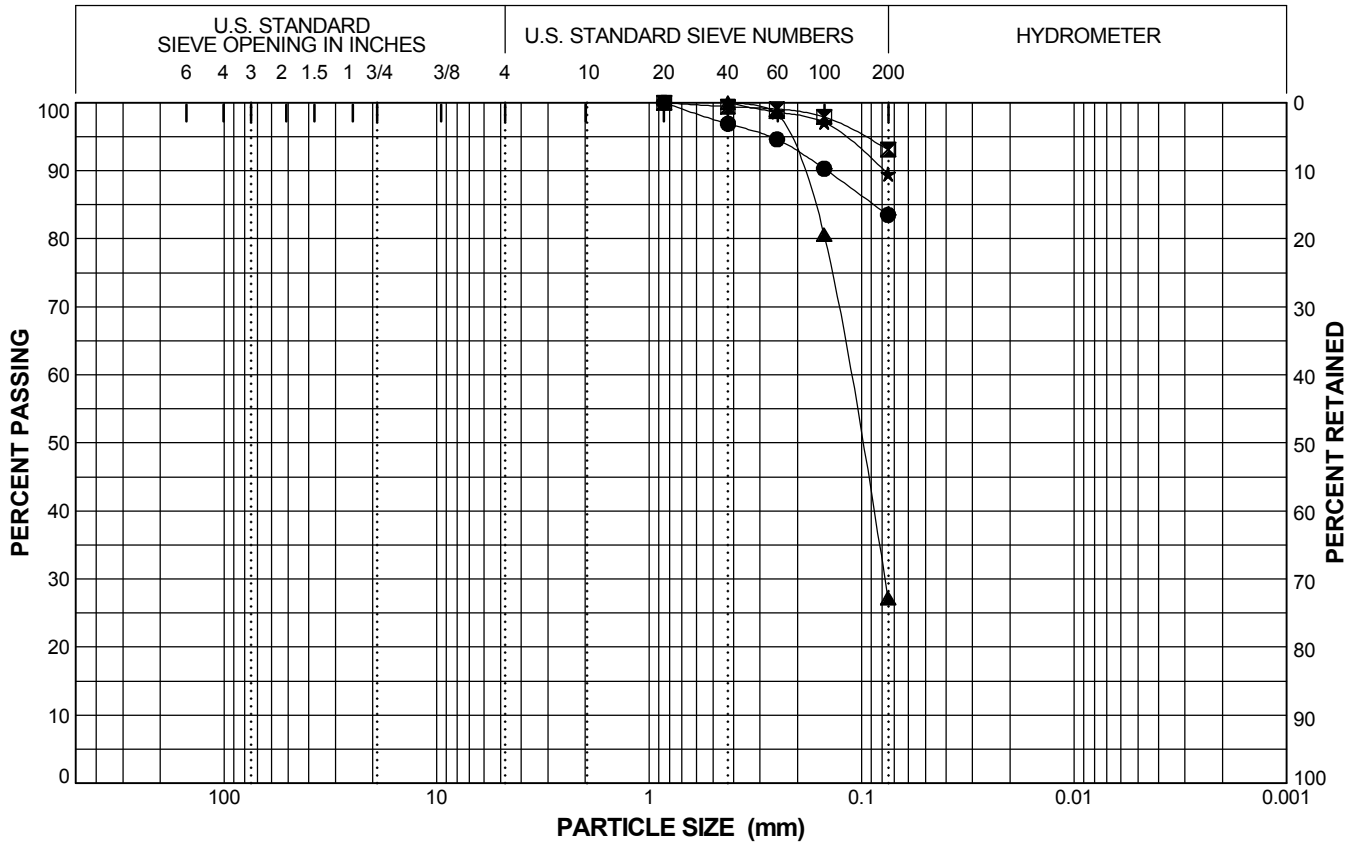

Boring ID	Sample #	Depth (feet)	Sample Moisture (%)	Dry Density (lbs/ft^3)	Symbol	LL	PI	% G	% S	% F	Classification
B-09-11	3	7.25-8.75'	82.8		●			0.0	16.5	83.5	Silt with Sand (ML)
B-09-11	8	29.75-31.25	33.3		⊠			0.0	6.9	93.1	Silt (ML)
B-10-11	1	0.5-1.5'	28.5		▲			0.0	72.8	27.2	Silty Sand (SM)
B-10-11	2	3.0-4.5'	36.0		★			0.0	10.5	89.5	Silt (ML)

Swan Lake Facility Improvement
Swan Lake, Kotzebue, AK
26220926

PARTICLE SIZE DISTRIBUTION CURVES

URS

Report: SIEVE_4_PORT; File: SWAN LAKE ALASKA.GPJ; 5/6/2011 B-10-11

COBBLES	GRAVEL		SAND			SILT OR CLAY
	coarse	fine	coarse	medium	fine	

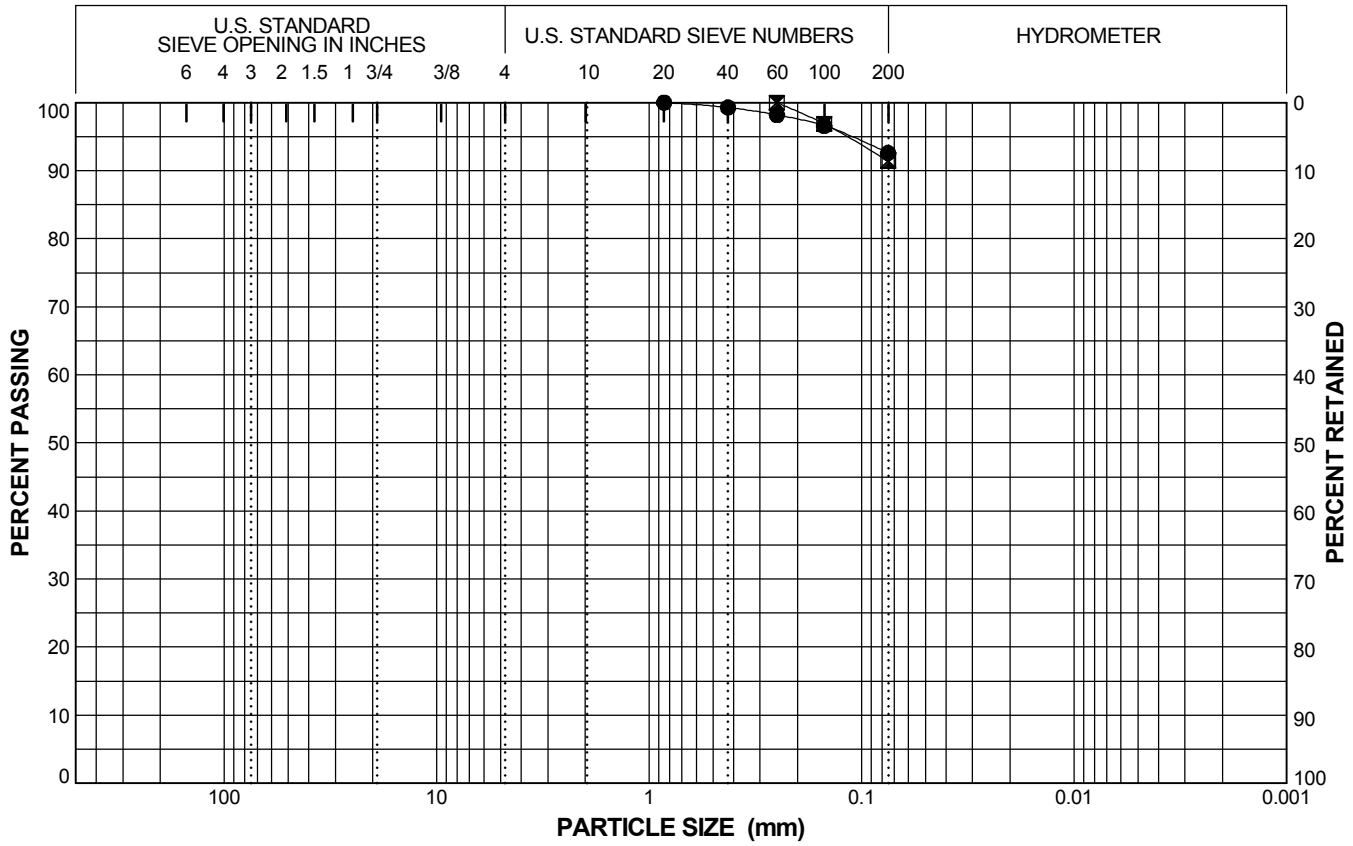

Boring ID	Sample #	Depth (feet)	Sample Moisture (%)	Dry Density (lbs/ft^3)	Symbol	LL	PI	% G	% S	% F	Classification
B-10-11	3	5.5-7.0'	43.7		●			0.0	7.4	92.6	Silt (ML)
B-10-11	4	8.0-9.5'	46.0		⧓	37	3	0.0	8.6	91.4	Silt (ML)

Swan Lake Facility Improvement
Swan Lake, Kotzebue, AK
26220926

PARTICLE SIZE DISTRIBUTION CURVES

URS

Report: SIEVE_4_PORT; File: SWAN LAKE ALASKA.GPJ; 5/6/2011 B-10-11

Larson Engineering Group Inc.

Kotzebue Raw Water Pipeline

Boring I.D (Field)	Sample Number	Depth Interval Top	Depth Interval Bottom	Moisture Content (%)	Atterberg Limits LL	Atterberg Limits PL	Atterberg Limits PI	Particle Size Analysis Gravel	Particle Size Analysis Sand	Particle Size Analysis Silt	Salinity (ppt)	Passing -#200 (%)	Passing 0.02mm (%)	Frost Class.	Unified Soil Classification
TH-2		5.0		30.7				6.0	16.5	77.5	0.5				(ML) Silt with sand
TH-2		10.0		48.1				0.0	4.4	95.6	0.7		46.3	F4	(ML) Silt
TH-2		15.0		135.8							0.6	92.3			
TH-2		20.0		68.2							2.0	92.5			
TH-2		25.0		50.6							1.4	93.0			
TH-8		5.0		42.4							21.0	78.1			
TH-8		10.0		29.1							20.5	36.7			
TH-8		15.0		34.7				2.0	38.2	59.8	33.8		8.8	F4	(ML) Sandy silt
TH-8		20.0		35.6							31.0	78.5			
TH-9		25.0		49.0							17.3	65.3			
TH-10		40.0		21.0				13.8	22.4	63.8	34.1		38.5	F4	(ML) Sandy silt
TH-11		0.0		27.1				18.7	48.8	32.5	6.2		16.3	F3	(SM) Silty sand with gravel
TH-11		5.0		11.7				13.3	43.0	43.7	11.1				(SM) Silty sand
TH-11		10.0		22.9							6.4	28.7			
TH-11		15.0		21.7							7.9	46.3			
TH-11		20.0		25.8				0.2	17	82.8	16.1		29.6	F4	(ML) Silt with sand
TH-11		25.0		37.0							15.9	92.1			

11301 Olive Lane
Anchorage, AK 99515

TERRA FIRMA TESTING

Laboratory Testing / Construction Monitoring

Telephone: (907) 344-5934
Fax: (907) 344-5993
www.nge-tft.com

PROJECT CLIENT:	Larson Engineering Group Inc.
PROJECT NAME:	Kotzebue Raw Water Pipeline
PROJECT NO.:	1866-08
SAMPLE LOCATION:	TH-10
SAMPLE NO/ DEPTH	(Depth 40.0')
DESCRIPTION:	Sandy silt
DATE TESTED:	3/24/2008
TESTED BY:	DP
REVIEWED BY:	Ron Caron C.E.T.

% GRAVEL:	13.8	USC:	ML
% SAND:	22.4	FC:	F4
% SILT/CLAY:	63.8	.02 mm:	38.5

ASTM D1557(uncorrected)	pcf
ASTM D4718 (corrected)	pcf
OPTIMUM M.C.% (corrected)	
NATURAL M.C. %	21.0

PARTICLE SIZE ANALYSIS

ASTM D422/ C136

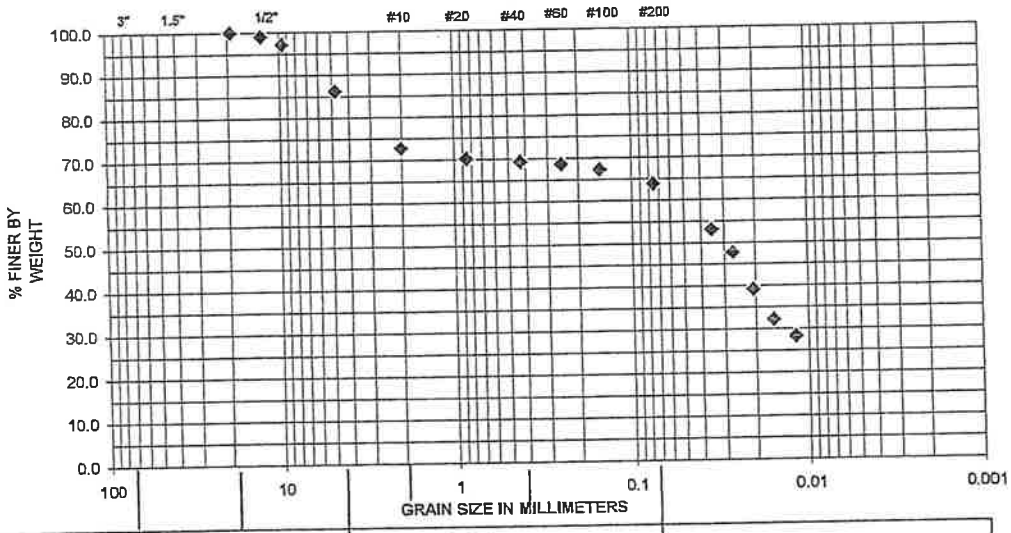

COBBLES	GRAVEL		SAND			SILT or CLAY
	Coarse	Fine	Coarse	Medium	Fine	

SIEVE ANALYSIS RESULT

SIEVE SIZE (mm)	SIEVE SIZE (in.)	TOTAL % PASSING	SPEC
152.4	6"		
76.2	3"		
38.1	1.5"		
19.05	3/4"	100	
12.7	1/2"	99	
9.5	3/8"	97	
4.75	# 4	86	
2	#10	73	
0.85	#20	70	
0.425	#40	69	
0.25	# 60	69	
0.15	#100	67	
0.075	#200	63.8	

HYDROMETER RESULT

ELAPSED TIME	DIAMETER (mm)	TOTAL % PASSING
0		
0.5		
1	0.0348	53.2
2	0.0267	47.7
4	0.0205	39.2
8	0.0156	32.2
15	0.0117	28.3
30		
60		
250		
1440		

MOISTURE-DENSITY RELATIONSHIP

ASTM D1557

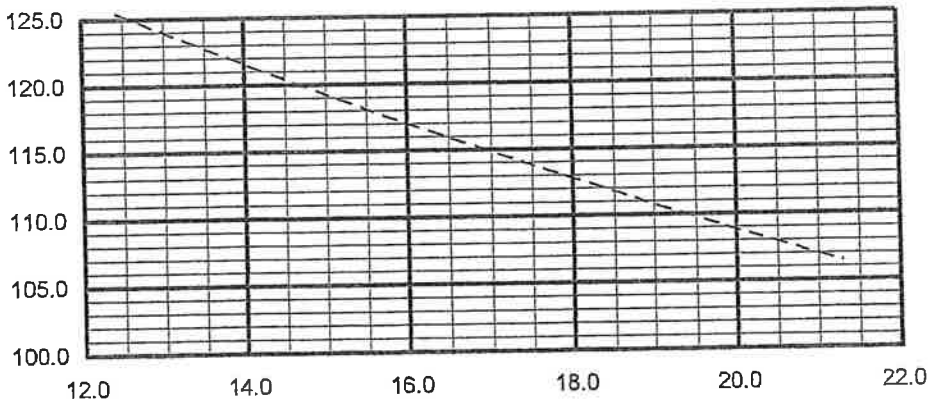

Perm. (ASTM D2438)	
Degradation (ATM T-13)	
Atterberg Limit ASTM 4318	

The testing services reported herein have been performed to recognized industry standards, unless otherwise noted. No other warranty is made. Should engineering interpretation or opinion be required,

11301 Olive Lane
Anchorage, AK 99515

TERRA FIRMA TESTING

Laboratory Testing / Construction Monitoring

Telephone: (907) 344-5934
Fax: (907) 344-5993
www.nge-tft.com

PROJECT CLIENT:	Larson Engineering Group Inc.
PROJECT NAME:	Kotzebue Raw Water Pipeline
PROJECT NO.:	1866-08
SAMPLE LOCATION:	TH-11
SAMPLE NO/ DEPTH	(Depth 0.0')
DESCRIPTION:	Silty sand with gravel
DATE TESTED:	3/24/2008
TESTED BY:	DP
REVIEWED BY:	Ron Caron C.E.T.

% GRAVEL:	18.7	USC:	SM
% SAND:	48.8	FC:	F3
% SILT/CLAY:	32.5	.02 mm:	16.3

ASTM D1557(uncorrected)	pcf
ASTM D4718 (corrected)	pcf
OPTIMUM M.C.% (corrected)	
NATURAL M.C. %	27.1

PARTICLE SIZE ANALYSIS

ASTM D422/ C136

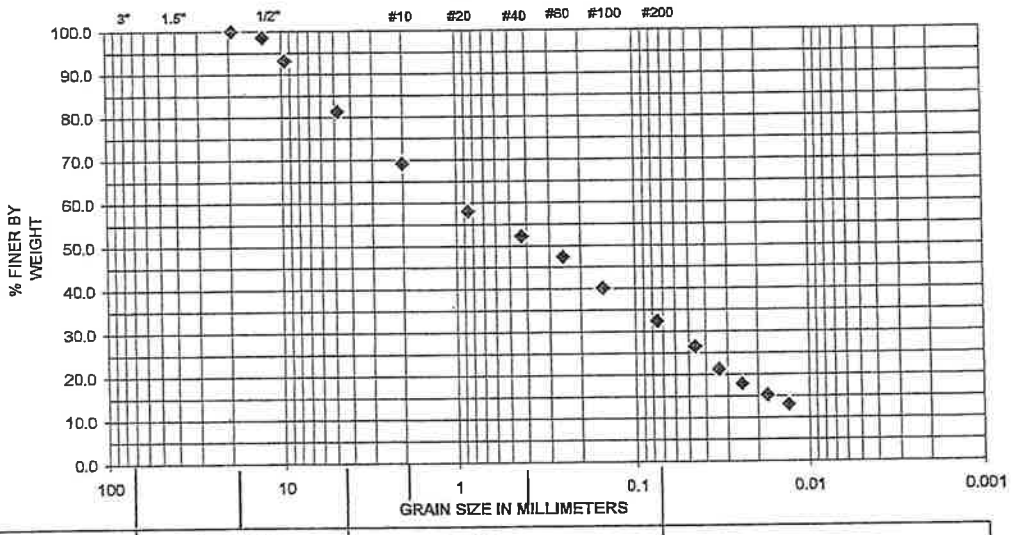

COBBLES	GRAVEL		SAND			SILT or CLAY
	Coarse	Fine	Coarse	Medium	Fine	

SIEVE ANALYSIS RESULT

SIEVE SIZE (mm)	SIEVE SIZE (in.)	TOTAL % PASSING	SPEC
152.4	6"		
76.2	3"		
38.1	1.5"		
19.05	3/4"	100	
12.7	1/2"	99	
9.5	3/8"	93	
4.75	# 4	81	
2	#10	69	
0.85	#20	58	
0.425	#40	52	
0.25	# 60	47	
0.15	#100	40	
0.075	#200	32.5	

HYDROMETER RESULT

ELAPSED TIME	DIAMETER (mm)	TOTAL % PASSING
0		
0.5		
1	0.0458	26.5
2	0.0335	21.3
4	0.0245	17.9
8	0.0176	15.3
15	0.0131	13.1
30		
60		
250		
1440		

MOISTURE-DENSITY RELATIONSHIP

ASTM D1557

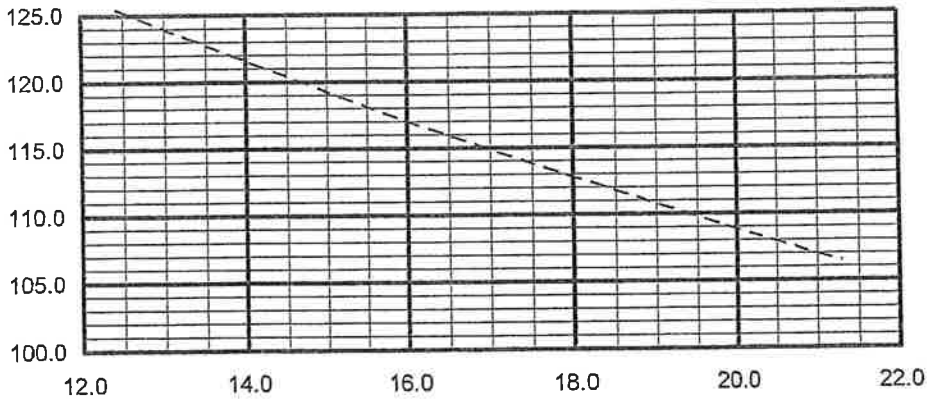

Perm. (ASTM D2438)	
Degradation (ATM T-13)	
Atterberg Limit ASTM 4318	

The testing services reported herein have been performed to recognized industry standards, unless otherwise noted. No other warranty is made. Should engineering interpretation or opinion be required,

11301 Olive Lane
Anchorage, AK 99515

TERRA FIRMA TESTING

Laboratory Testing / Construction Monitoring

Telephone: (907) 344-5934
Fax: (907) 344-5993
www.nge-tft.com

PROJECT CLIENT:	Larson Engineering Group Inc.
PROJECT NAME:	Kotzebue Raw Water Pipeline
PROJECT NO.:	1866-08
SAMPLE LOCATION:	TH-11
SAMPLE NO/ DEPTH	(Depth 5.0')
DESCRIPTION:	Silty sand
DATE TESTED:	3/21/2008
TESTED BY:	D.P.
REVIEWED BY:	Ron Caron C.E.T.

% GRAVEL:	13.3	USC:	SM
% SAND:	43.0	FC:	
% SILT/CLAY:	43.7	.02 mm:	

ASTM D1557(uncorrected)	pcf
ASTM D4718 (corrected)	pcf
OPTIMUM M.C.% (corrected)	
NATURAL M.C. %	11.7

PARTICLE SIZE ANALYSIS

ASTM D422/ C136

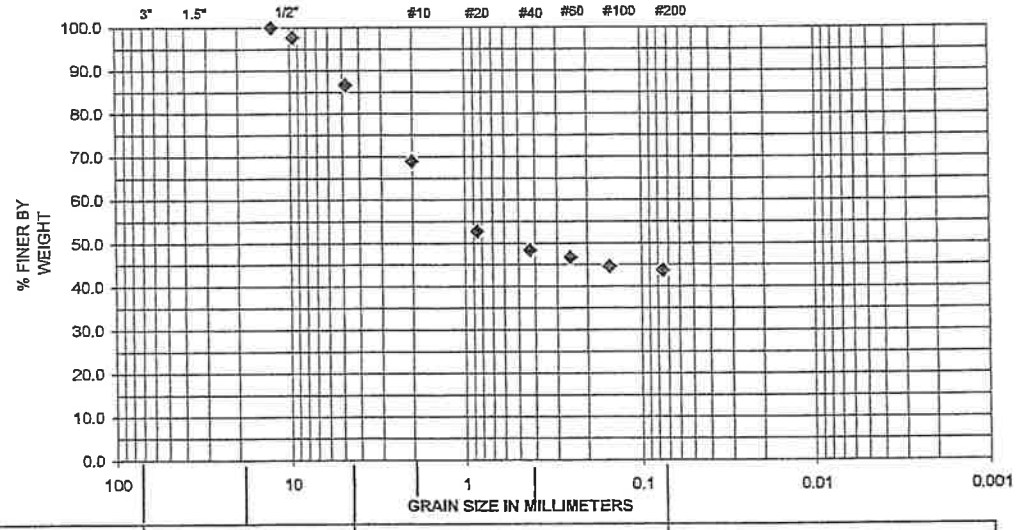

COBBLES	GRAVEL		SAND			SILT or CLAY
	Coarse	Fine	Coarse	Medium	Fine	

SIEVE ANALYSIS RESULT

SIEVE SIZE (mm)	SIEVE SIZE (in.)	TOTAL % PASSING	SPEC
152.4	6"		
76.2	3"		
38.1	1.5"		
19.05	3/4"		
12.7	1/2"	100	
9.5	3/8"	98	
4.75	# 4	87	
2	#10	69	
0.85	#20	53	
0.425	#40	48	
0.25	# 60	47	
0.15	#100	45	
0.075	#200	43.7	

HYDROMETER RESULT

ELAPSED TIME	DIAMETER (mm)	TOTAL % PASSING
0		
0.5		
1		
2		
4		
8		
15		
30		
60		
250		
1440		

MOISTURE-DENSITY RELATIONSHIP

ASTM D1557

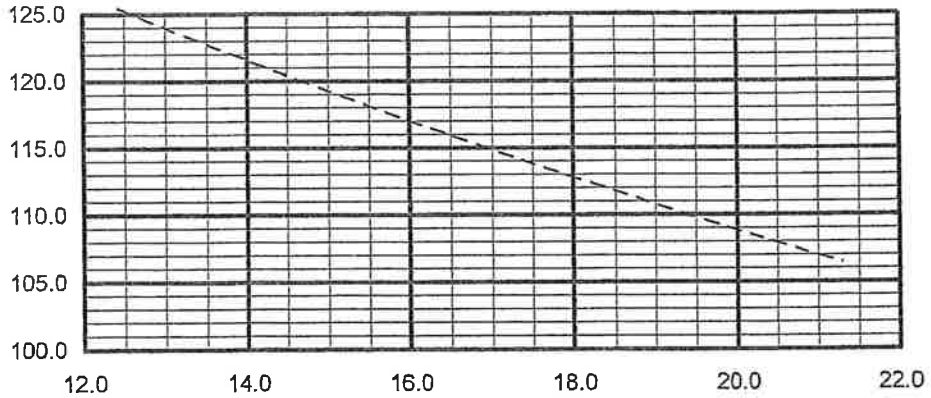

Perm. (ASTM D2438)	
Degradation (ATM T-13)	
Atterberg Limit ASTM 4318	

The testing services reported herein have been performed to recognized industry standards, unless otherwise noted. No other warranty is made. Should engineering interpretation or opinion be required,

11301 Olive Lane
Anchorage, AK 99515

TERRA FIRMA TESTING

Laboratory Testing / Construction Monitoring

Telephone: (907) 344-5934
Fax: (907) 344-5993
www.nge-tft.com

PROJECT CLIENT:	Larson Engineering Group Inc.
PROJECT NAME:	Kotzebue Raw Water Pipeline
PROJECT NO.:	1866-08
SAMPLE LOCATION:	TH-11
SAMPLE NO/ DEPTH	(Depth 20.0')
DESCRIPTION:	Silt with sand
DATE TESTED:	3/24/2008
TESTED BY:	DP
REVIEWED BY:	Ron Caron C.E.T.

% GRAVEL:	0.2	USC:	ML
% SAND:	17.0	FC:	F4
% SILT/CLAY:	82.8	.02 mm:	29.6

ASTM D1557(uncorrected)	pcf
ASTM D4718 (corrected)	pcf
OPTIMUM M.C.% (corrected)	
NATURAL M.C. %	25.8

PARTICLE SIZE ANALYSIS

ASTM D422/ C136

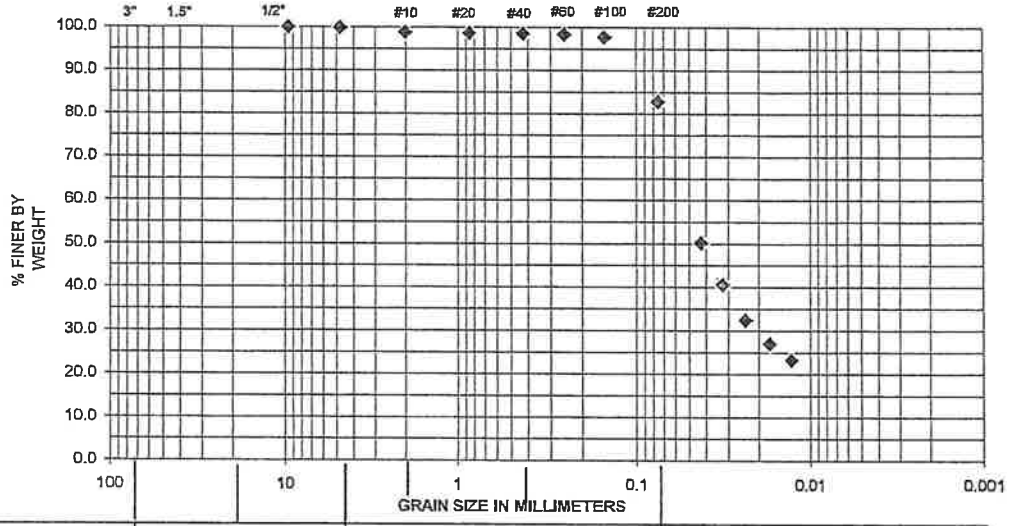

COBBLES	GRAVEL		SAND			SILT or CLAY
	Coarse	Fine	Coarse	Medium	Fine	

SIEVE ANALYSIS RESULT

SIEVE SIZE (mm)	SIEVE SIZE (in.)	TOTAL % PASSING	SPEC
152.4	6"		
76.2	3"		
38.1	1.5"		
19.05	3/4"		
12.7	1/2"		
9.5	3/8"	100	
4.75	# 4	100	
2	#10	99	
0.85	#20	99	
0.425	#40	99	
0.25	# 60	98	
0.15	#100	98	
0.075	#200	82.8	

HYDROMETER RESULT

ELAPSED TIME	DIAMETER (mm)	TOTAL % PASSING
0		
0.5		
1	0.0424	50.3
2	0.0321	40.6
4	0.0237	32.4
8	0.0172	27.0
15	0.0128	23.3
30		
60		
250		
1440		

MOISTURE-DENSITY RELATIONSHIP

ASTM D1557

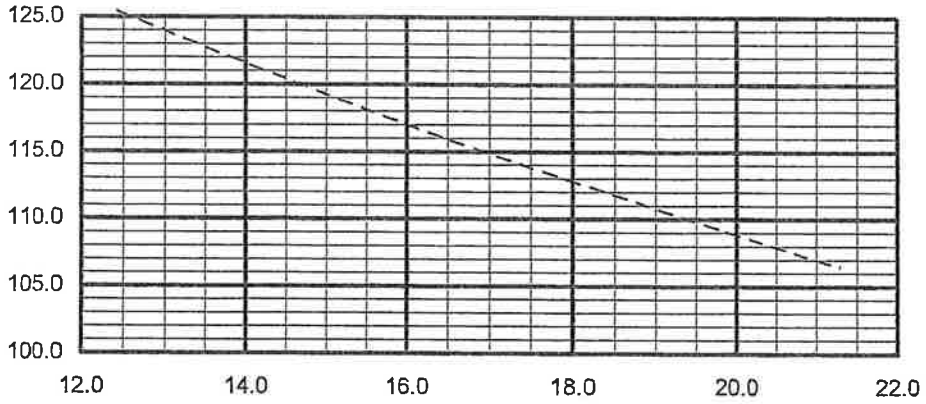

Perm. (ASTM D2438)	
Degradation (ATM T-13)	
Atterberg Limit ASTM 4318	

The testing services reported herein have been performed to recognized industry standards, unless otherwise noted. No other warranty is made. Should engineering interpretation or opinion be required.

APPENDIX C

USGS SEISMIC PARAMETERS

The following table presents a brief description of the seismic parameters for this site.

IBC Parameter Description	IBC Parameter Symbol	IBC Parameter Value
0.2-second (short period) spectral response acceleration	S_S	0.428
1-second spectral response acceleration	S_1	0.129
Short period site coefficient	F_a	1.458
1-second period site coefficient	F_v	2.284
Maximum considered spectral response acceleration for short periods	S_{MS}	0.623
Maximum considered spectral response acceleration for 1-second periods	S_{M1}	0.294
Design spectral response acceleration for short periods	S_{DS}	0.416
Design spectral response acceleration for 1-second periods	S_{D1}	0.196
Defined Site Class	Site Class	D

Notes:

1. Design Peak Ground Acceleration (PGA) is taken as SDS/2.5.
2. For a recurrance potential of 10% in 50 years, mean and maximum earthquake magnitudes of M5.7 and M7.3 were determined for this site.

Data Source: United States Geological Survey, 2008, 2009 IBC Design Parameters determined using: “Seismic Design Values for Buildings - Ground Motion Parameter Calculator - Version 5.1.0,” from the USGS website.

The following data was obtained from the footnoted source for the specific site identified by the latitude and longitude shown. It is considered valid as of the date shown above.

Alaska
IBC 2009 & 2005 ASCE 7 Standard
Latitude = 66.896471
Longitude = -162.578254
Spectral Response Accelerations Ss and S1
Ss and S1 = Mapped Spectral Acceleration Values
Site Class B - Fa = 1.0 ,Fv = 1.0
Data are based on a 0.10 deg grid spacing

Period (sec)	Sa (g)
0.2	0.428 (Ss, Site Class B)
1.0	0.129 (S1, Site Class B)

Alaska
IBC 2009 & 2005 ASCE 7 Standard
Latitude = 66.896471
Longitude = -162.578254
Spectral Response Accelerations SMs and SM1
SMs = Fa x Ss and SM1 = Fv x S1
Site Class D - Fa = 1.458 , Fv = 2.284

Period (sec)	Sa (g)
0.2	0.623 (SMs, Site Class D)
1.0	0.294 (SM1, Site Class D)

Alaska
IBC 2009 & 2005 ASCE 7 Standard
Latitude = 66.896471
Longitude = -162.578254
Design Spectral Response Accelerations SDs and SD1
SDs = 2/3 x SMs and SD1 = 2/3 x SM1
Site Class D - Fa = 1.458 , Fv = 2.284

Period (sec)	Sa (g)
0.2	0.416 (SDs, Site Class D)
1.0	0.196 (SD1, Site Class D)

Alaska
IBC 2009 & 2005 ASCE 7 Standard
Latitude = 66.896471
Longitude = -162.578254
MCE Response Spectrum for Site Class B
Ss and S1 = Mapped Spectral Acceleration Values
Site Class B - Fa = 1.0 ,Fv = 1.0

Period (sec)	Sa (g)	Sd (inches)
0.000	0.171	0.000
0.060	0.428	0.015
0.200	0.428	0.167
0.302	0.428	0.380
0.400	0.322	0.504
0.500	0.258	0.630
0.600	0.215	0.756
0.700	0.184	0.882
0.800	0.161	1.008
0.900	0.143	1.133
1.000	0.129	1.259
1.100	0.117	1.385
1.200	0.107	1.511
1.300	0.099	1.637
1.400	0.092	1.763
1.500	0.086	1.889
1.600	0.081	2.015
1.700	0.076	2.141
1.800	0.072	2.267
1.900	0.068	2.393
2.000	0.064	2.519

Alaska
IBC 2009 & 2005 ASCE 7 Standard
Latitude = 66.896471
Longitude = -162.578254
Site Modified Response Spectrum for Site Class D
SMs = FaSs and SM1 = FvS1
Site Class D - Fa = 1.458 ,Fv = 2.284

Period (sec)	Sa (g)	Sd (inches)
0.000	0.249	0.000
0.094	0.623	0.054
0.200	0.623	0.244
0.472	0.623	1.359
0.500	0.589	1.438
0.600	0.491	1.726
0.700	0.421	2.014
0.800	0.368	2.301
0.900	0.327	2.589
1.000	0.294	2.876
1.100	0.268	3.164
1.200	0.245	3.452
1.300	0.226	3.739
1.400	0.210	4.027
1.500	0.196	4.315
1.600	0.184	4.602
1.700	0.173	4.890
1.800	0.164	5.178
1.900	0.155	5.465
2.000	0.147	5.753

Alaska
IBC 2009 & 2005 ASCE 7 Standard
Latitude = 66.896471
Longitude = -162.578254
Design Response Spectrum for Site Class D
SDs = 2/3 x SMs and SD1 = 2/3 x SM1
Site Class D - Fa = 1.458 ,Fv = 2.284

Period (sec)	Sa (g)	Sd (inches)
0.000	0.166	0.000
0.094	0.416	0.036
0.200	0.416	0.162
0.472	0.416	0.906
0.500	0.393	0.959
0.600	0.327	1.151
0.700	0.280	1.342
0.800	0.245	1.534
0.900	0.218	1.726
1.000	0.196	1.918
1.100	0.178	2.109
1.200	0.164	2.301
1.300	0.151	2.493
1.400	0.140	2.685
1.500	0.131	2.876
1.600	0.123	3.068
1.700	0.115	3.260
1.800	0.109	3.452
1.900	0.103	3.644
2.000	0.098	3.835

Data Source: United States Geological Survey, 2008, 2009 IBC Design Parameters determined using: “Seismic Design Values for Buildings - Ground Motion Parameter Calculator - Version 5.1.0,” from the USGS website.

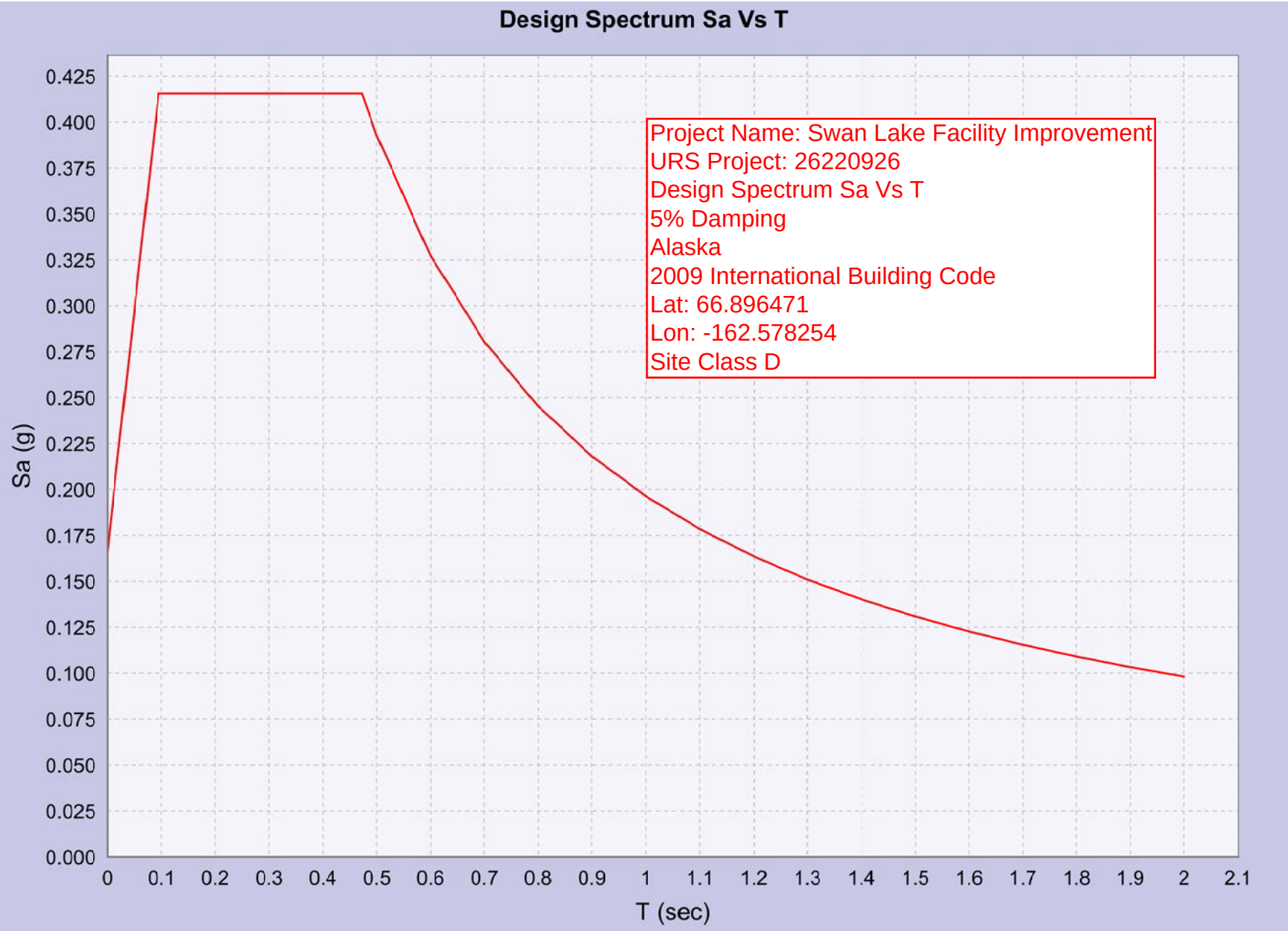
Design Spectrum Sa Vs T
Project Name: Swan Lake Facility Improvement
URS Project: 26220926
Design Spectrum Sa Vs T
5% Damping
Alaska
2009 International Building Code
Lat: 66.896471
Lon: -162.578254
Site Class D
Sa (g)
0.425
0.400
0.375
0.350
0.325
0.300
0.275
0.250
0.225
0.200
0.175
0.150
0.125
0.100
0.075
0.050
0.025
0.000
0
0.1
0.2
0.3
0.4
0.5
0.6
0.7
0.8
0.9
1
1.1
1.2
1.3
1.4
1.5
1.6
1.7
1.8
1.9
2
2.1
T (sec)

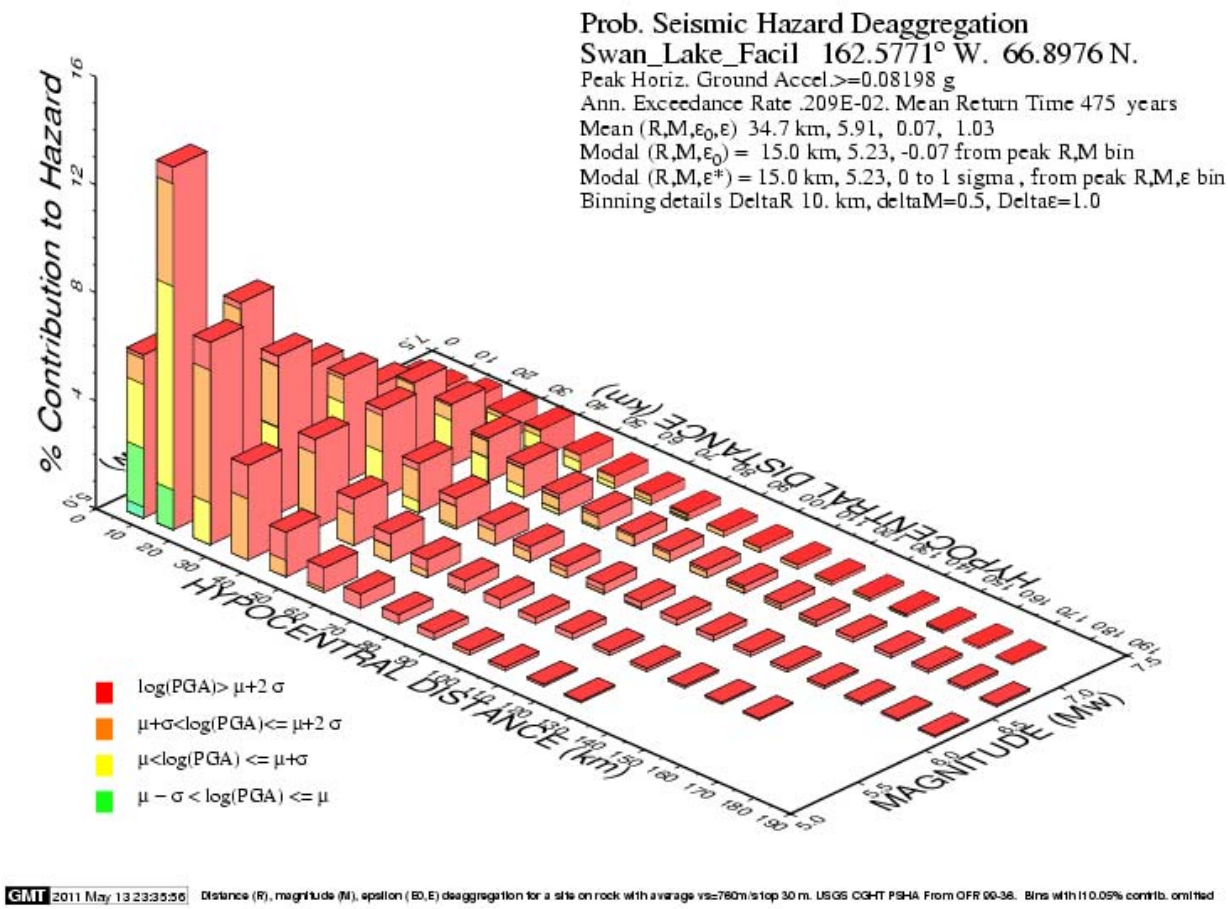

GMT 2011 May 13 23:35:56 Distance (R), magnitude (M), epsilon (ε0,ε) deaggregation for a site on rock with average vs=760m/s top 30 m. USGS CGHT PSHA From OFR 99-38. Bins with l 0.05% contrib. omitted

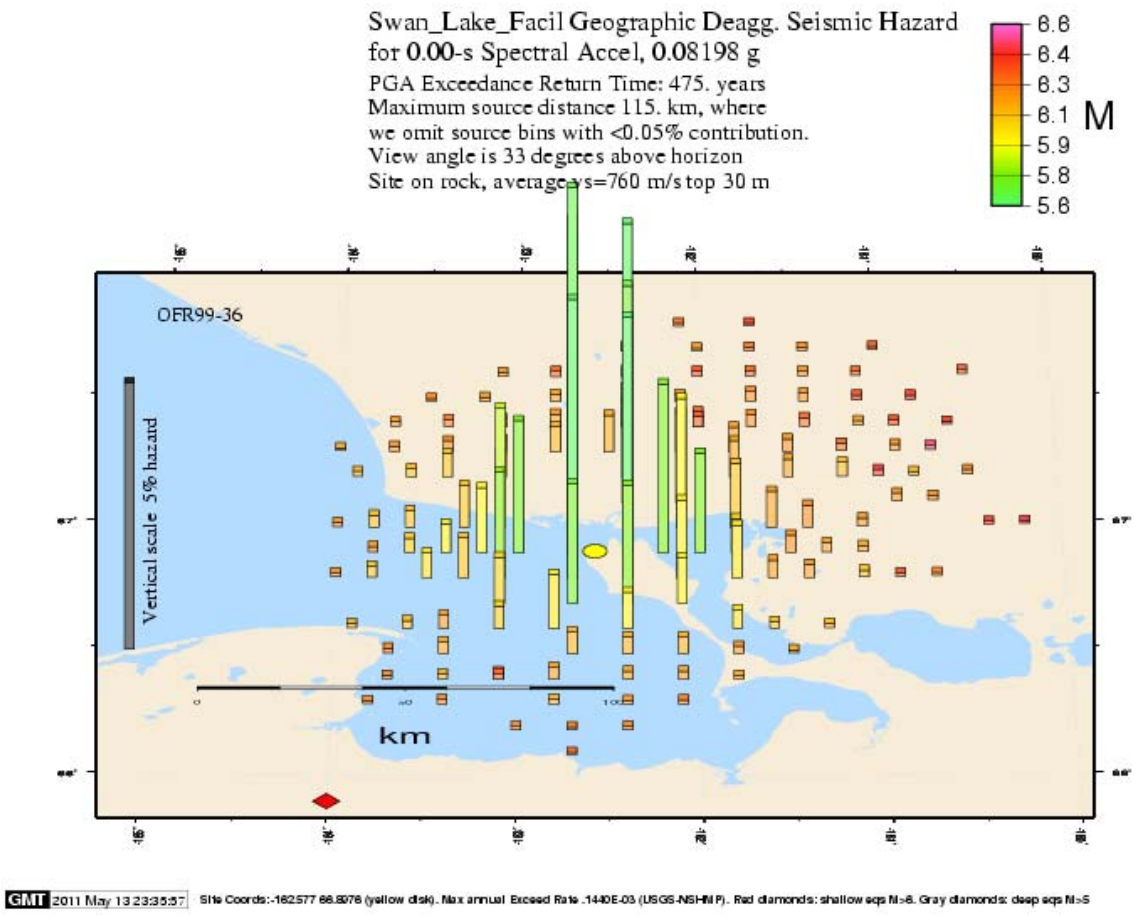
Swan_Lake_Facil Geographic Deagg. Seismic Hazard
for 0.00-s Spectral Accel, 0.08198 g
PGA Exceedance Return Time: 475. years
Maximum source distance 115. km, where
we omit source bins with <0.05% contribution.
View angle is 33 degrees above horizon
Site on rock, average vs=760 m/s top 30 m
6.6
6.4
6.3
6.1
5.9
5.8
5.6
M
OFR99-36
Vertical scale 5% hazard
km
GMT 2011 May 13 23:35:57
Site Coords:-162.577 66.8076 (yellow disk). Max annual Exceed Rate .1440E-03 (USGS-NSHMP). Red diamonds: shallow eqs M>6. Gray diamonds: deep eqs M>5

APPENDIX D

LIQUEFACTION CALCULATIONS AND REPORTS

LIQUEFACTION ANALYSIS

Swan Lake Facility Improvement

Hole No.=URS-03-11 Water Depth=0.5 ft Surface Elev.=4

Magnitude=6.0
Acceleration=0.167g

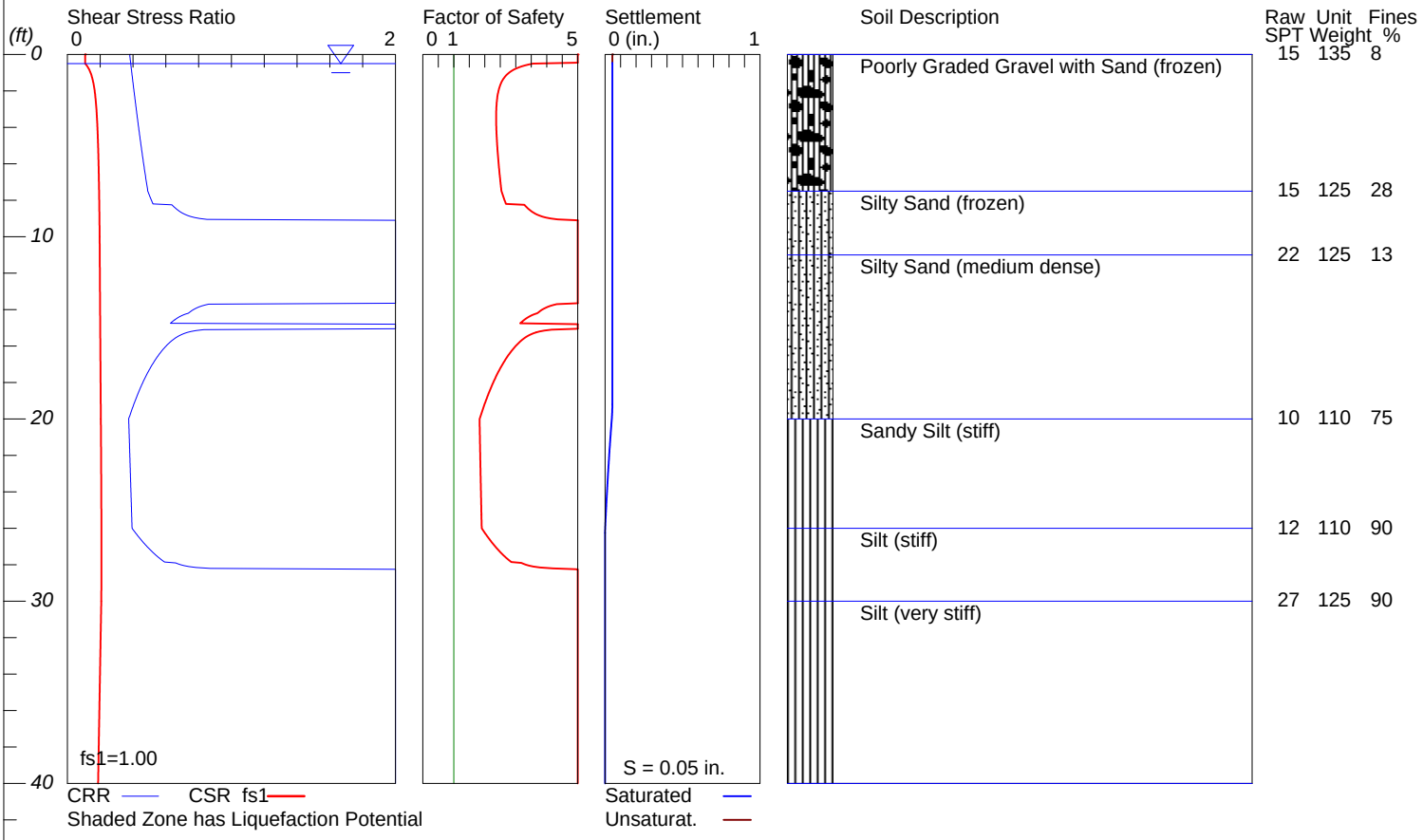

LiquefyPro CivilTech Software USA www.civiltech.com

LIQUEFACTION ANALYSIS

Swan Lake Facility Improvement

Hole No.=URS-03-11 Water Depth=0.5 ft Surface Elev.=4

Magnitude=6.0
Acceleration=0.167g

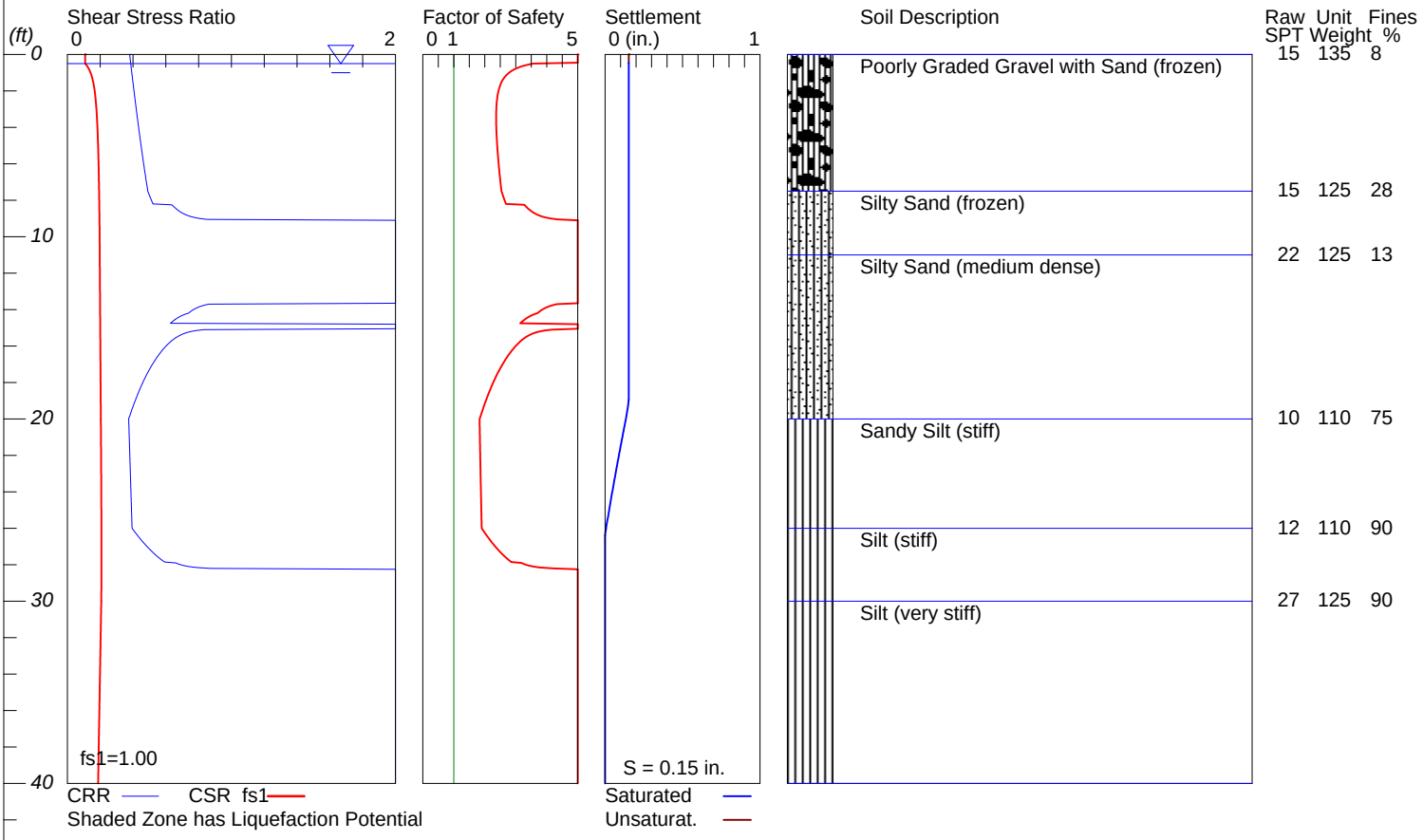

LiquefyPro CivilTech Software USA www.civiltech.com

LIQUEFACTION ANALYSIS

Swan Lake Facility Improvement

Hole No.=URS-03-11 Water Depth=0.5 ft Surface Elev.=4

Magnitude=7.5
Acceleration=0.167g

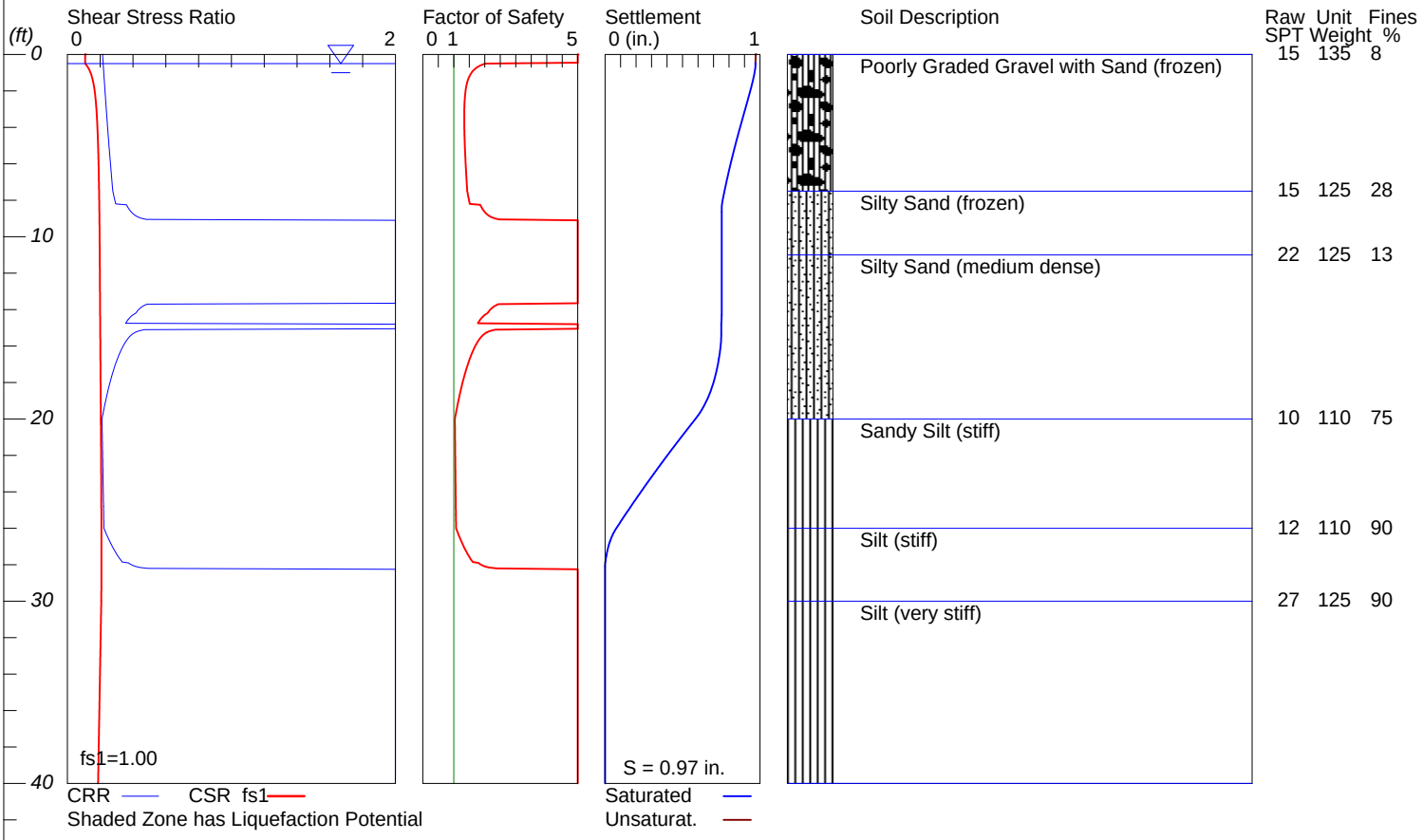

LiquefyPro CivilTech Software USA www.civiltech.com

LIQUEFACTION ANALYSIS

Swan Lake Facility Improvement

Hole No.=URS-03-11 Water Depth=0.5 ft Surface Elev.=4

Magnitude=7.5
Acceleration=0.167g

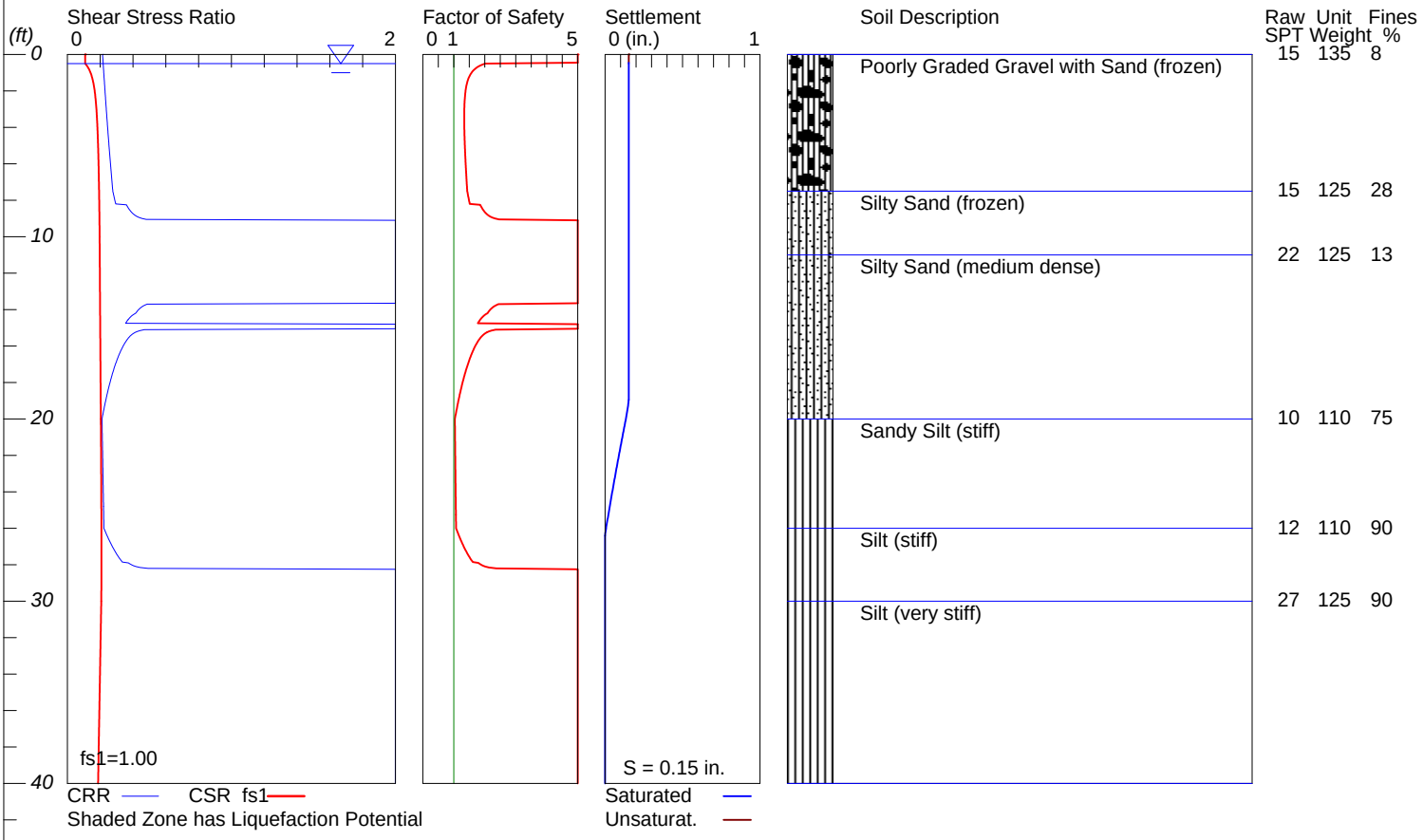

LiquefyPro CivilTech Software USA www.civiltech.com

LIQUEFACTION ANALYSIS

Swan Lake Facility Improvement

Hole No.=URS-5,6,7 & 9-11 Water Depth=0.5 ft Surface Elev.=3 Magnitude=6.0
Acceleration=0.167g

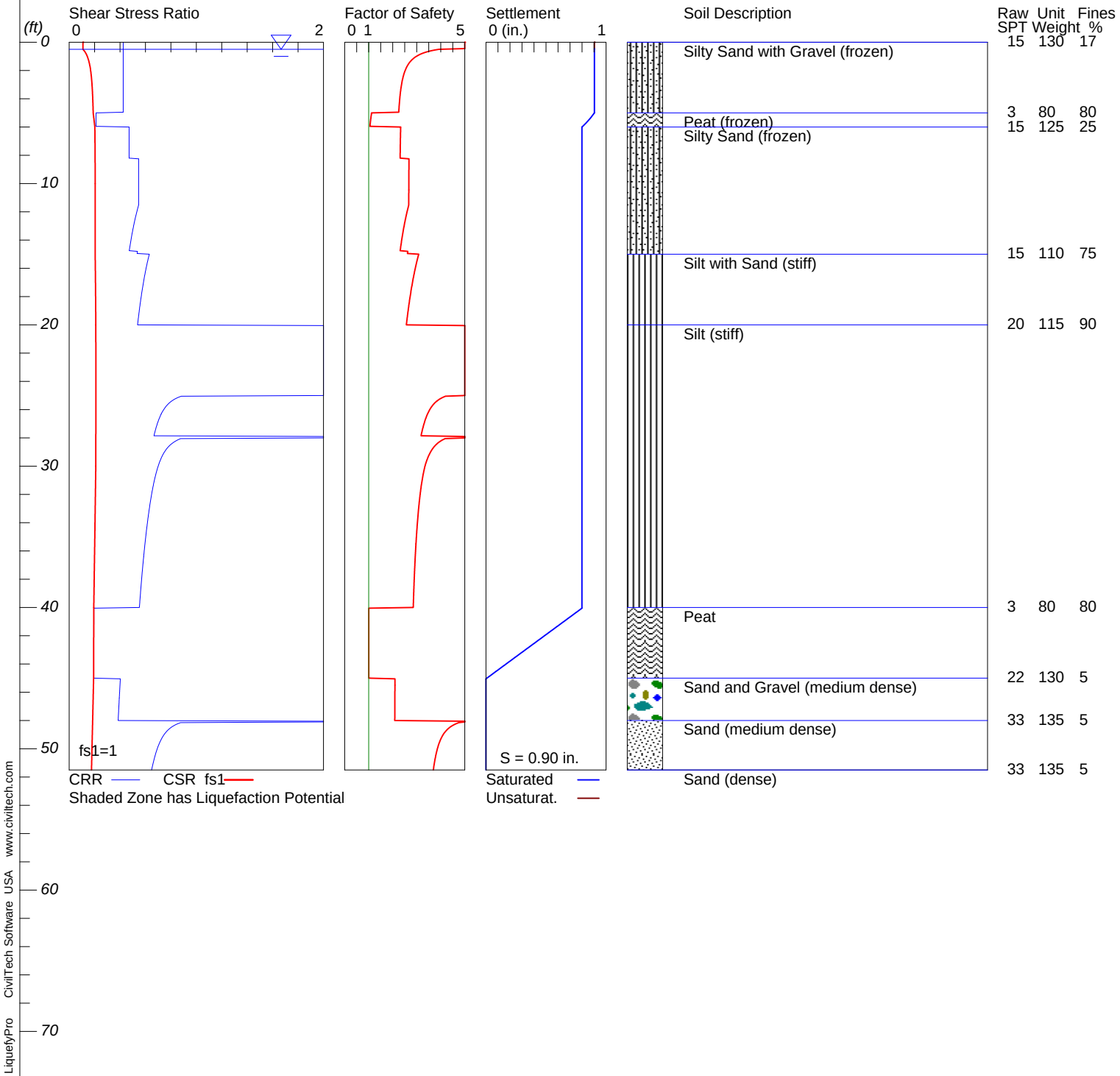

LIQUEFACTION ANALYSIS

Swan Lake Facility Improvement

Hole No.=URS-5,6,7 & 9-11 Water Depth=0.5 ft Surface Elev.=3 Magnitude=6.0
Acceleration=0.167g

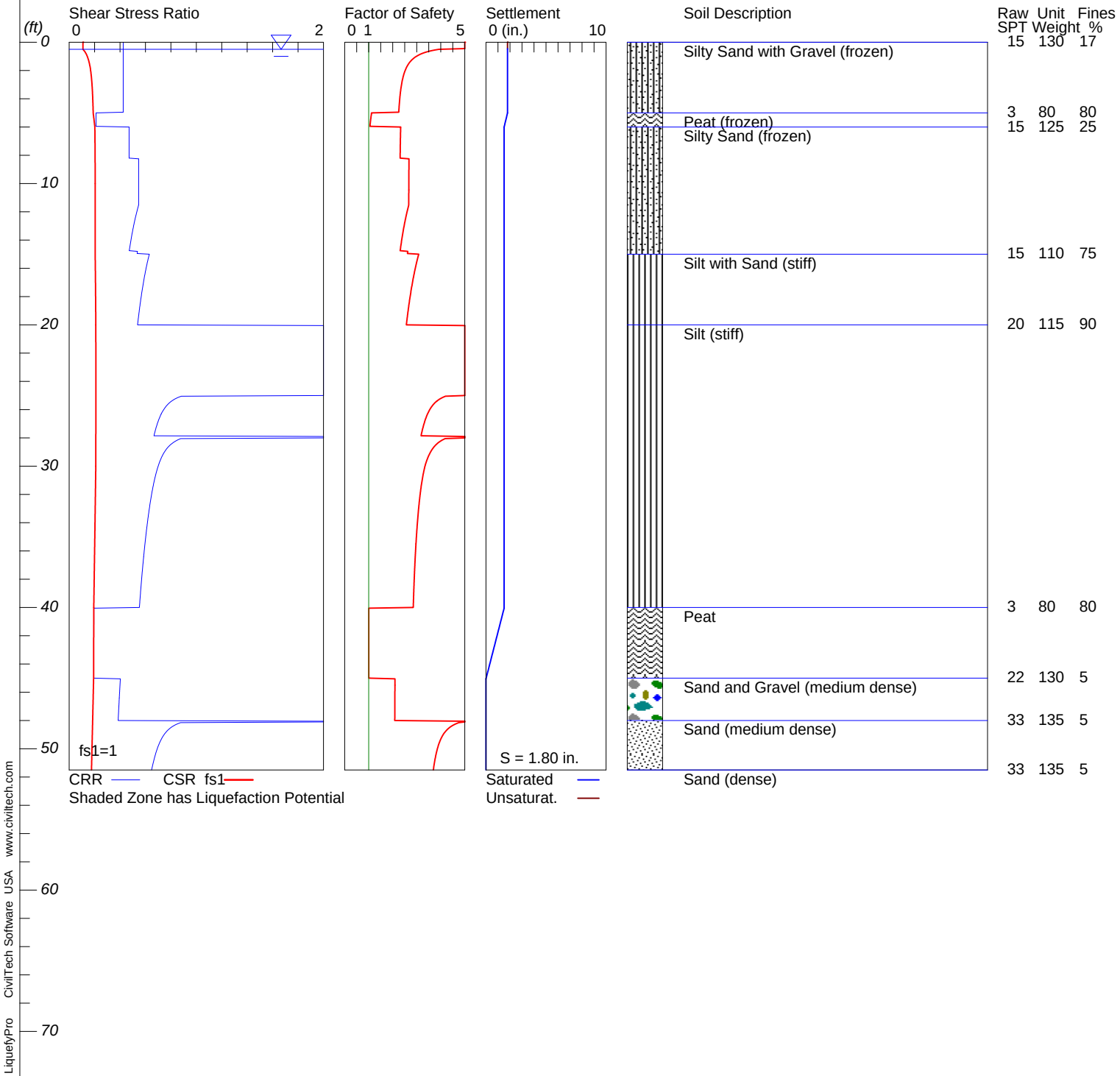

LIQUEFACTION ANALYSIS

Swan Lake Facility Improvement

Hole No.=URS-5,6,7 & 9-11 Water Depth=0.5 ft Surface Elev.=3 Magnitude=7.5
Acceleration=0.167g

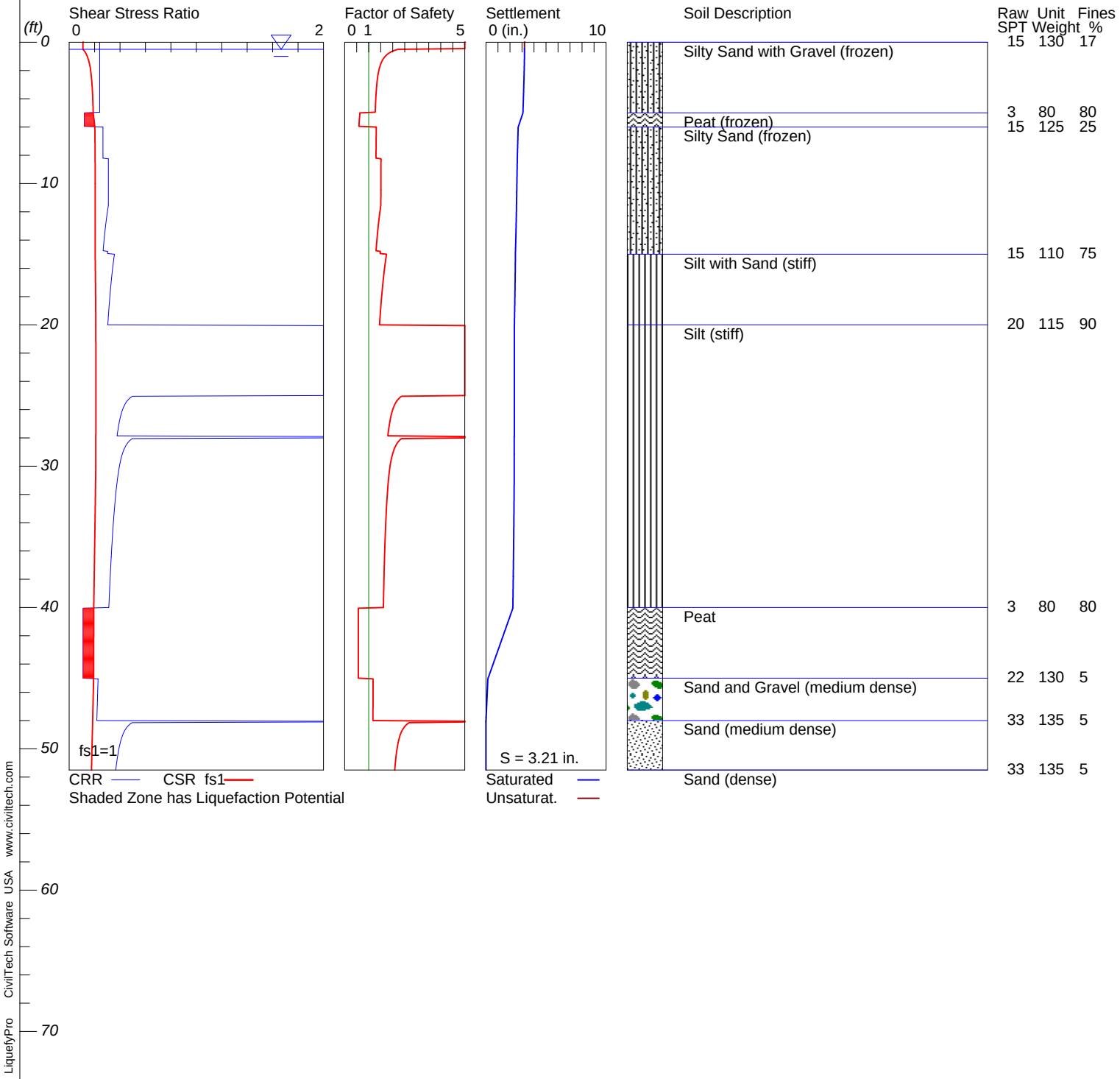

LIQUEFACTION ANALYSIS

Swan Lake Facility Improvement

Hole No.=URS-5,6,7 & 9-11 Water Depth=0.5 ft Surface Elev.=3 Magnitude=7.5
Acceleration=0.167g

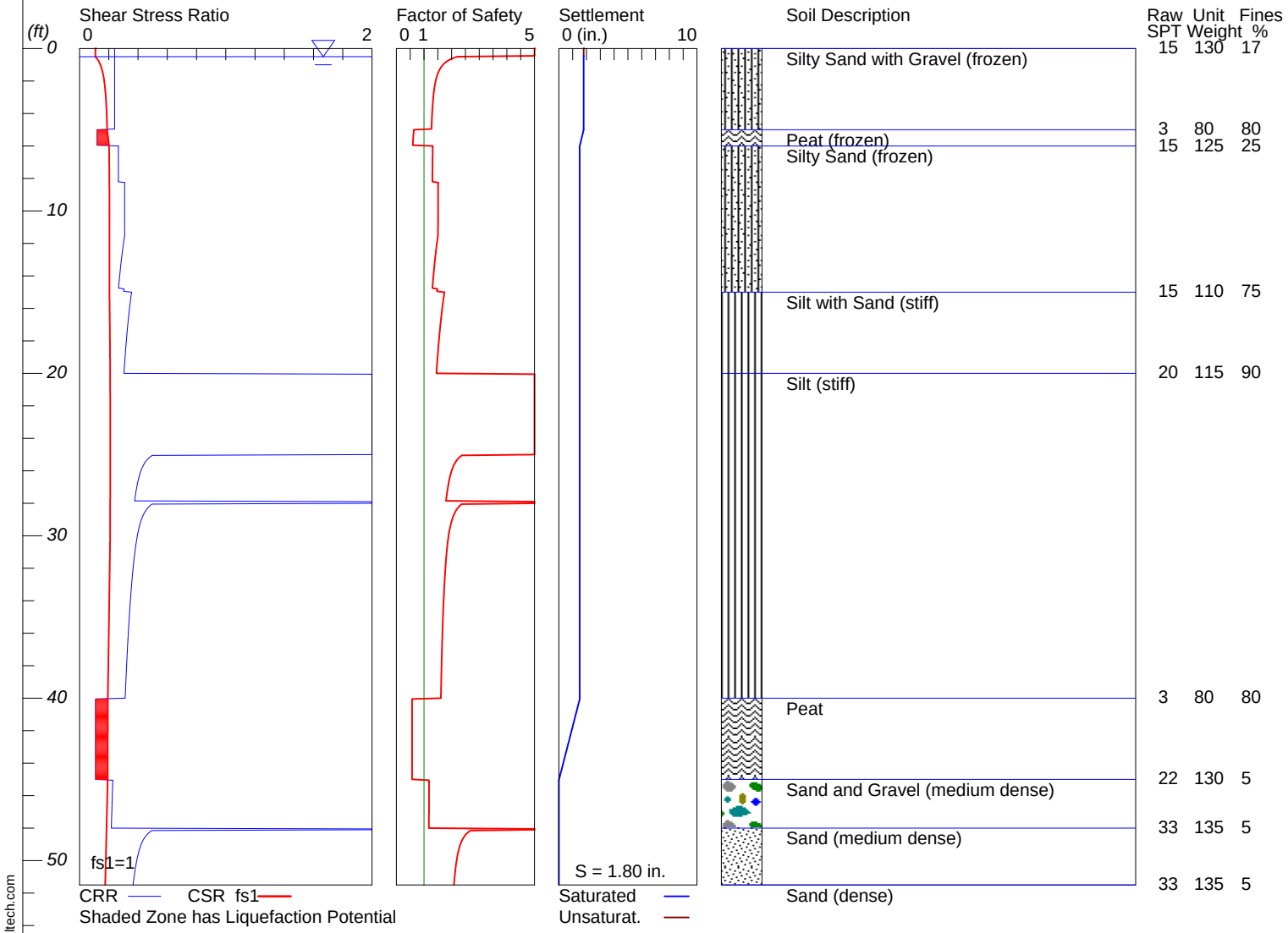

LiquefyPro CivilTech Software USA www.civiltech.com

LIQUEFACTION ANALYSIS

Swan Lake Facility Improvement

Hole No.=URS-03-11 Water Depth=-2 ft Surface Elev.=4

Magnitude=6.0
Acceleration=0.167g

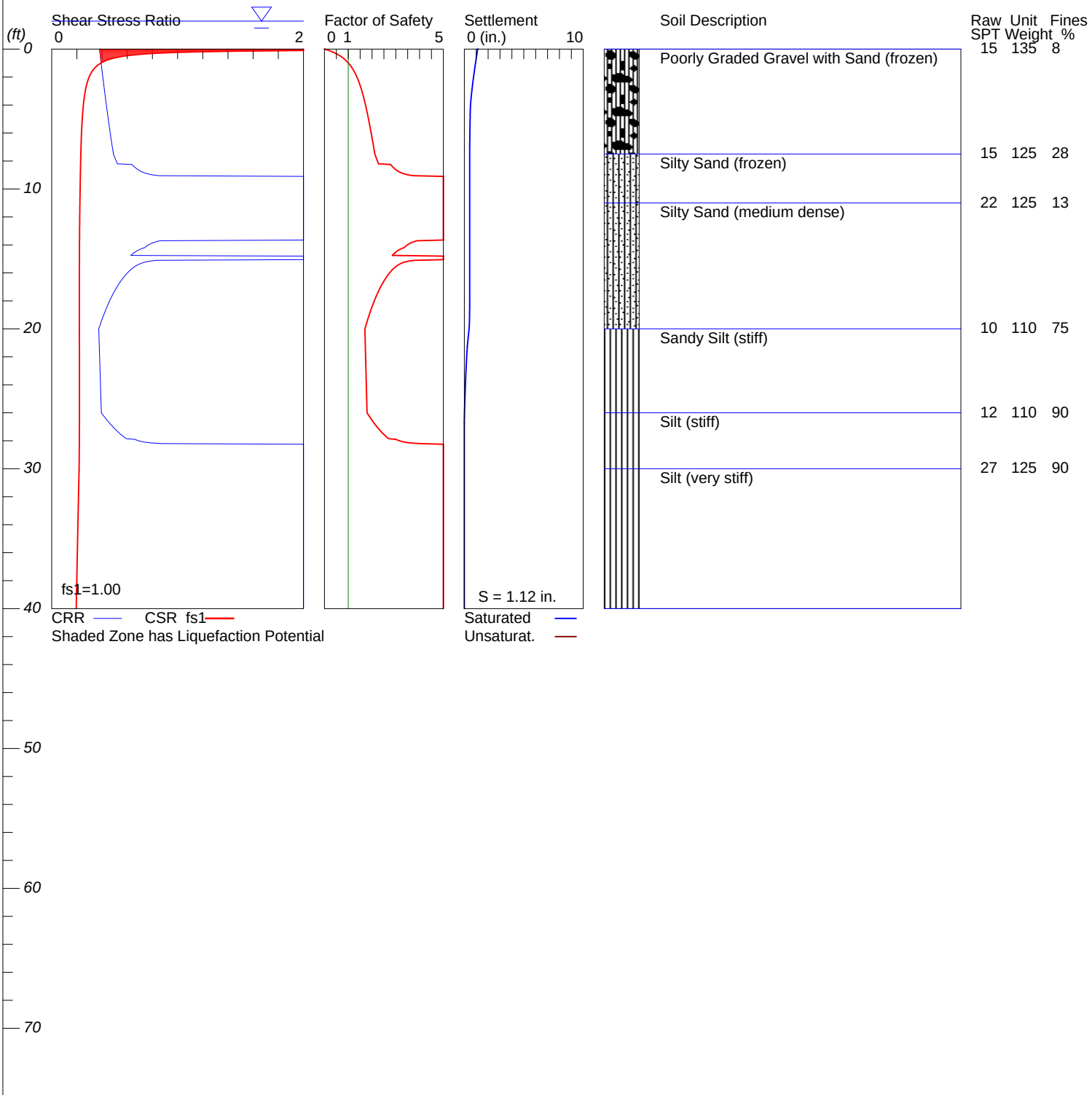

LiquefyPro CivilTech Software USA www.civiltech.com

LIQUEFACTION ANALYSIS

Swan Lake Facility Improvement

Hole No.=URS-5,6,7 & 9-1 Water Depth=-3 ft Surface Elev.=3

Magnitude=6.0
Acceleration=0.167g

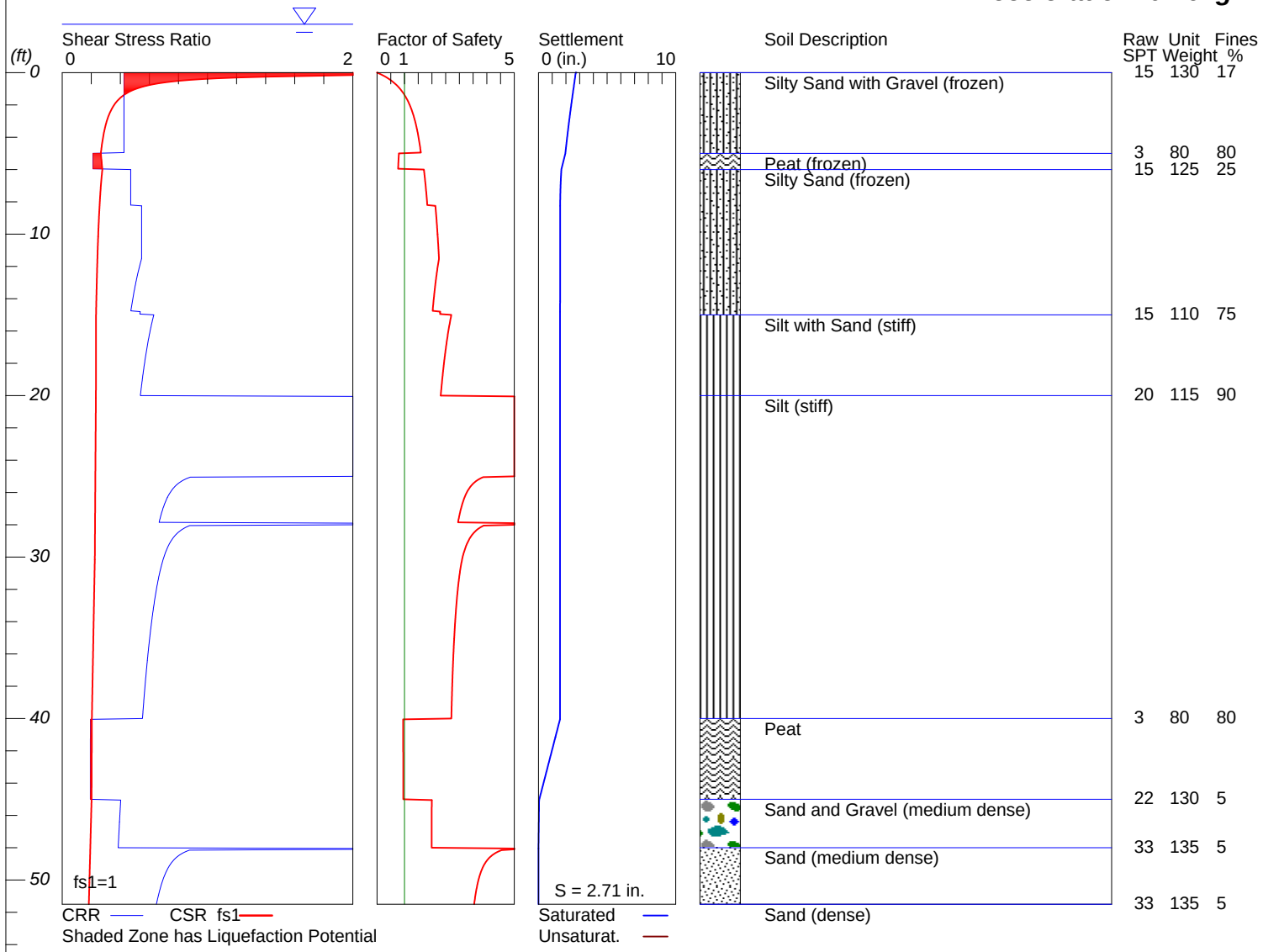

LiquefyPro CivilTech Software USA www.civiltech.com

APPENDIX E

SLOPE STABILITY PARAMETERS AND RESULTS

Static

Name: Silty Sand/ Sand Model: Mohr-Coulomb Unit Weight: 130 pcf Cohesion: 0 psf Phi: 32 °
Name: Silt/sandy Silt Model: Mohr-Coulomb Unit Weight: 115 pcf Cohesion: 0 psf Phi: 28 °
Name: Peat Model: Mohr-Coulomb Unit Weight: 85 pcf Cohesion: 100 psf Phi: 0 °
Name: Hard Material Model: Bedrock (Impenetrable)

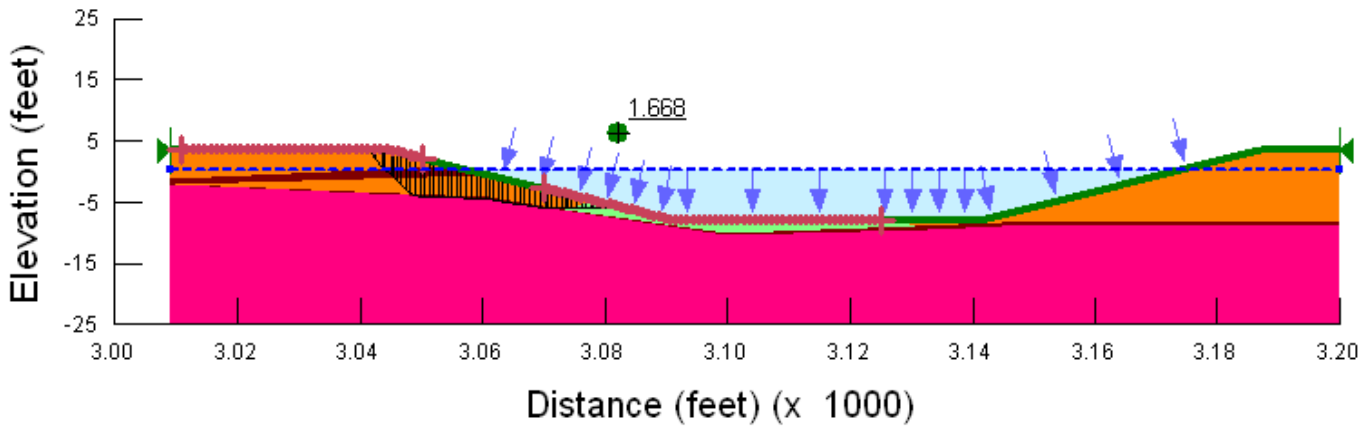

Static

Name: Silty Sand/ Sand Model: Mohr-Coulomb Unit Weight: 130 pcf Cohesion: 0 psf Phi: 32 °
Name: Silt/sandy Silt Model: Mohr-Coulomb Unit Weight: 115 pcf Cohesion: 0 psf Phi: 28 °
Name: Peat Model: Mohr-Coulomb Unit Weight: 85 pcf Cohesion: 100 psf Phi: 0 °
Name: Hard Material Model: Bedrock (Impenetrable)

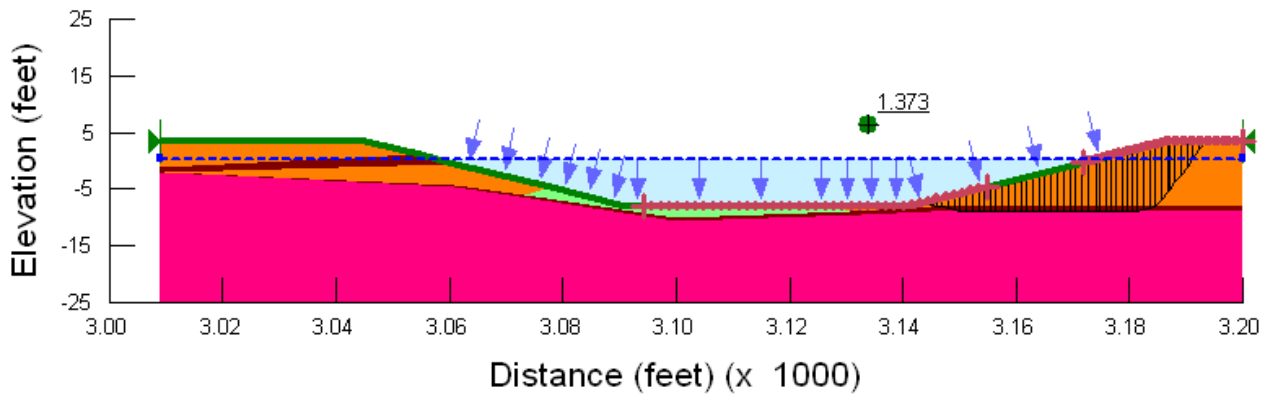

Static

Name: Silty Sand/ Sand Model: Mohr-Coulomb Unit Weight: 130 pcf Cohesion: 0 psf Phi: 32 °
Name: Silt/sandy Silt Model: Mohr-Coulomb Unit Weight: 115 pcf Cohesion: 0 psf Phi: 28 °

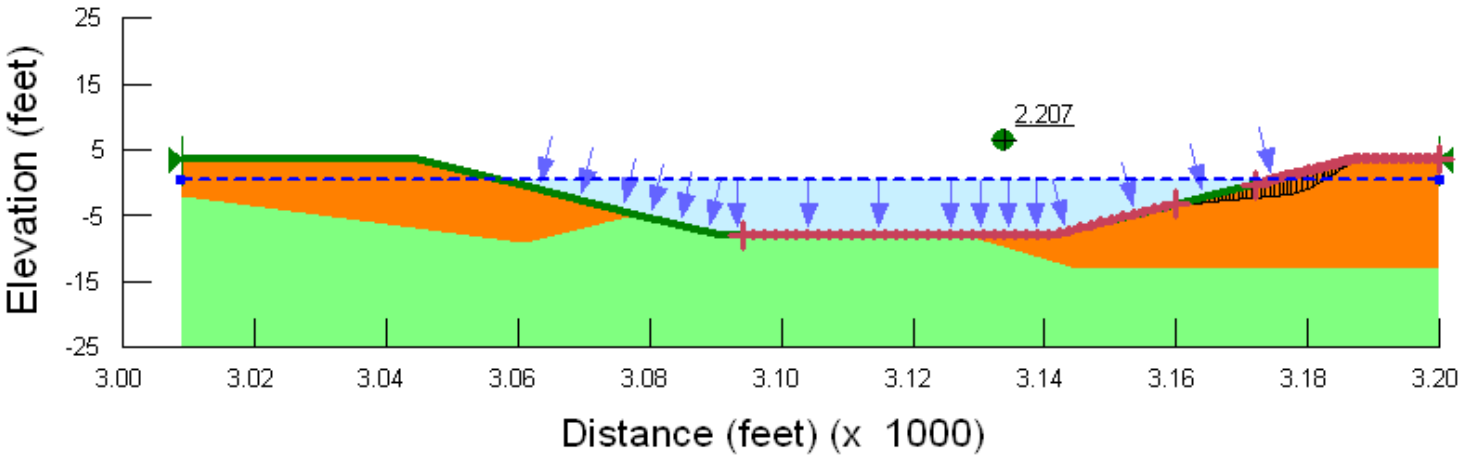

Seismic

Name: Silty Sand/ Sand Model: Mohr-Coulomb Unit Weight: 130 pcf Cohesion: 0 psf Phi: 32 °
Name: Silt/sandy Silt Model: Mohr-Coulomb Unit Weight: 115 pcf Cohesion: 0 psf Phi: 28 °
Name: Peat Model: Mohr-Coulomb Unit Weight: 85 pcf Cohesion: 100 psf Phi: 0 °
Name: Hard Material Model: Bedrock (Impenetrable)

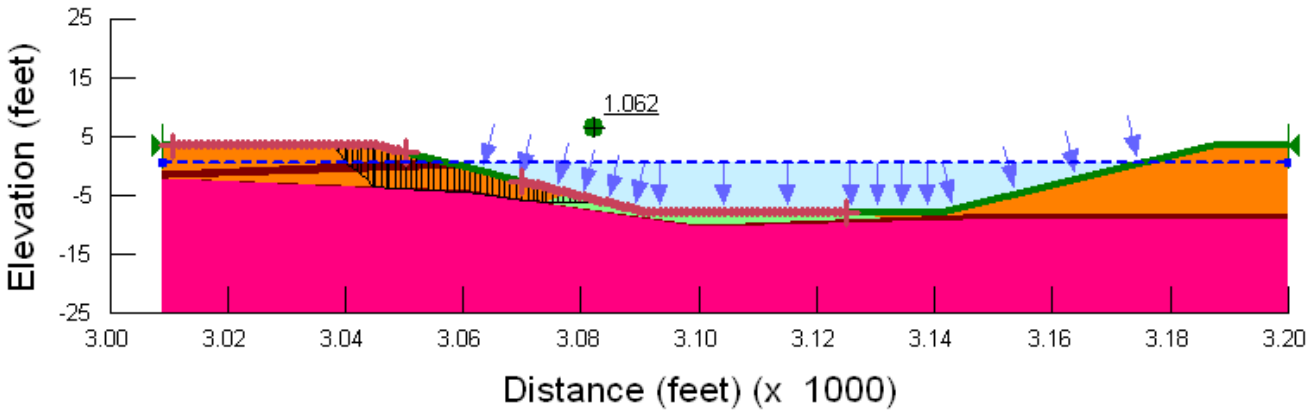

Seismic

Name: Silty Sand/ Sand Model: Mohr-Coulomb Unit Weight: 130 pcf Cohesion: 0 psf Phi: 32 °
Name: Silt/sandy Silt Model: Mohr-Coulomb Unit Weight: 115 pcf Cohesion: 0 psf Phi: 28 °
Name: Peat Model: Mohr-Coulomb Unit Weight: 85 pcf Cohesion: 100 psf Phi: 0 °
Name: Hard Material Model: Bedrock (Impenetrable)

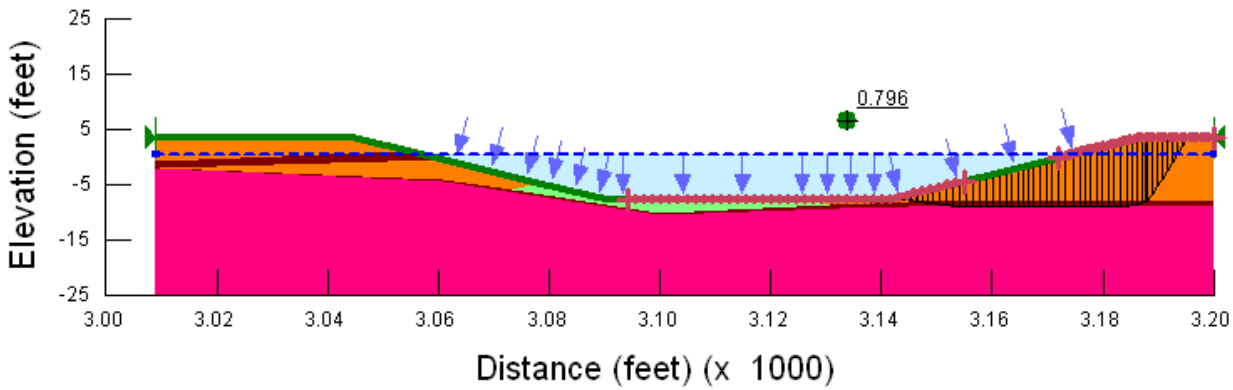

Seismic

Name: Silty Sand/ Sand Model: Mohr-Coulomb Unit Weight: 130 pcf Cohesion: 0 psf Phi: 32 °
Name: Silt/sandy Silt Model: Mohr-Coulomb Unit Weight: 115 pcf Cohesion: 0 psf Phi: 28 °

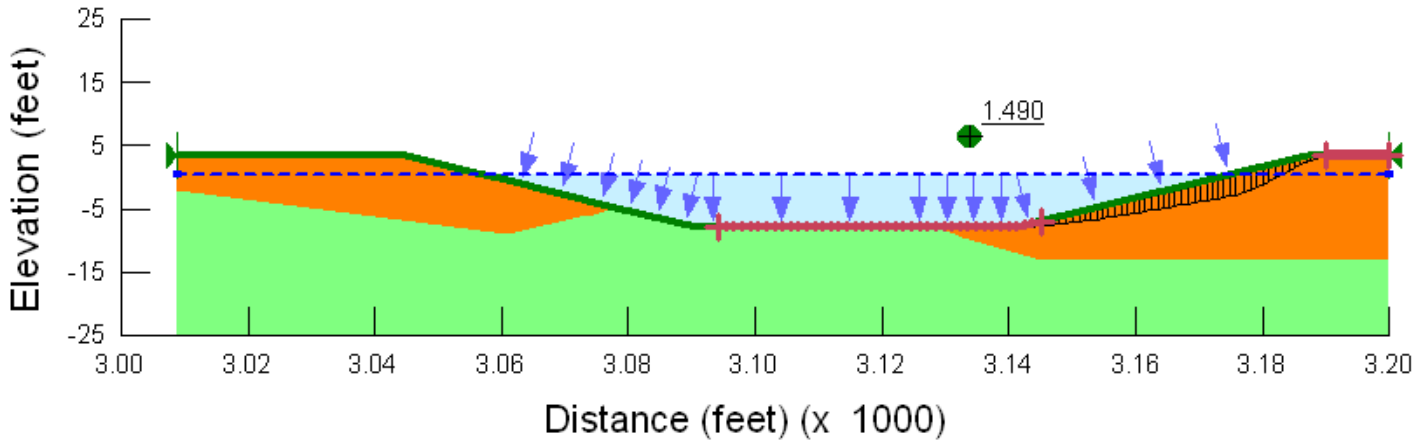

APPENDIX F

ANCHOR PILE EVALUATION RESULTS

Project: Swan Lake Facility Improvement, Kotzebue, AK
Project Number: 26220926
10-Jun-11
Weyrauch

Vertical Capacity, and Lateral Loads and Deflections - Float Anchor Piles

				Deflection (30 ft. Pile Length)						Deflection (25 ft. Pile Length)				Deflection (20 ft. Pile Length)			
				14"x30'x0.172"		14"x30'x0.375"	14"x30'x0.500"	12.75"x30'x0.375"	12.75"x30'x0.500"	14"x25'x0.375"	14"x25'x0.500"	12.75"x25'x0.375"	12.75"x25'x0.500"	14"x20'x0.375"	14"x20'x0.500"	12.75"x20'x0.375"	12.75"x20'x0.500"
Load (P)	Degree	P_{horiz}	P_{vert}	ΔY" (horiz)	ΔX" (vert)	ΔY" (horiz)	ΔY" (horiz)	ΔY" (horiz)	ΔY" (horiz)	ΔY" (horiz)	ΔY" (horiz)	ΔY" (horiz)	ΔY" (horiz)	ΔY" (horiz)	ΔY" (horiz)	ΔY" (horiz)	ΔY" (horiz)
12	0	12.00	0.00	1.22	0	0.55	0.43	0.67	0.55	0.55	0.44	0.68	0.55	0.55	0.44	0.68	0.55
12	10	11.82	2.08	1.19	<.001												
12	20	11.28	4.10	1.11	<.001	0.5	0.4	0.62	0.51	0.5	0.4	0.62	0.51	0.5	0.4	0.62	0.51
10	0	10.00	0.00	0.93	0	0.42	0.33	0.52	0.43								
10	10	9.85	1.74	0.91	<.001												
10	20	9.40	3.42	0.85	<.001	0.38	0.3	0.48	0.39								
8	0	8.00	0.00	0.67	0	0.3	0.24	0.38	0.31								
8	10	7.88	1.39	0.66	<.001												
8	20	7.52	2.74	0.61	<.001	0.27	0.22	0.34	0.28								
6	0	6.00	0.00	0.43	0	0.19	0.15	0.25	0.2								
6	10	5.91	1.04	0.42	<.001												
6	20	5.64	2.05	0.39	<.001	0.18	0.14	0.22	0.18								
Ultimate Vertical Capacity (DOWN)			(kips)	64		79	82	69	71	58	61	52	54	38	41	34	37
Ultimate Vertical Capacity (UP)			(kips)	30		35	36	31	32	25	26	23	23	16	16	14	15

Loads are in kips, degrees are measured from the horizontal

LATERAL ANALYSIS

12.75" x 30' x .375 wall @12 kips

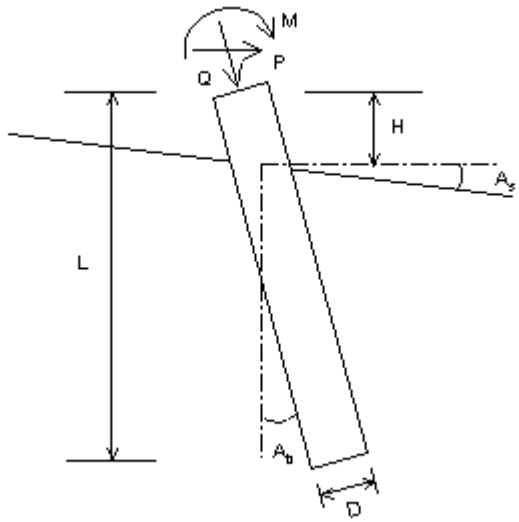

Driving Steel Pile (Open end)

Loads:

Load Factor for Vertical Loads= 1.0
Load Factor for Lateral Loads= 1.0
Loads Supported by Pile Cap= 0 %
Shear Condition: Cyclic
Number of Cycles: 100
Vertical Load, Q= 0.0 -kp
Shear Load, P= 12.0 -kp
Moment, M= 0.0 -kp-f

Profile:

Pile Length, L= 30.0 -ft
Top Height, H= 1 -ft
Slope Angle, As= 0.0
Batter Angle, Ab= 0.0

Free Head Condition

Soil Data:

Depth -ft	Gamma -lb/f3	Phi	C -kp/f2	K -lb/i3	e50 or Dr %	Nspt
0	128	29	.010	120.3	0.92	9
6	131	31	.010	193.8	0.75	13
35	131	31	.010	187.5	0.76	13

Pile Data:

Depth -ft	Width -in	Area -in2	Per. -in	I -in4	E -kp/i2	Weight -kp/f
0.0	12.75	14.0	40.1	267.0	29000	0.047
30.0	12.75	14.0	40.1	269.7	29000	.047

Single Pile Lateral Analysis:

Top Deflection, yt= 0.67700-in
Max. Moment, M= 58.17-kp-f
Top Deflection Slope, St= -0.00868
OK! Top Deflection, 0.6770-in is less than the Allowable Deflection= 1.00-in

Note: If program can't find result or the result exceeds the up limits. The result shows 9999.
The Max. Moment calculated by program is an internal force from the applied load conditions. Structural engineer has to check whether the pile has enough capacity to resist the moment with adequate factor of safety. If not, the pile may fail under the load conditions.

LATERAL ANALYSIS

12.75" x 30' x .500 @12 kips

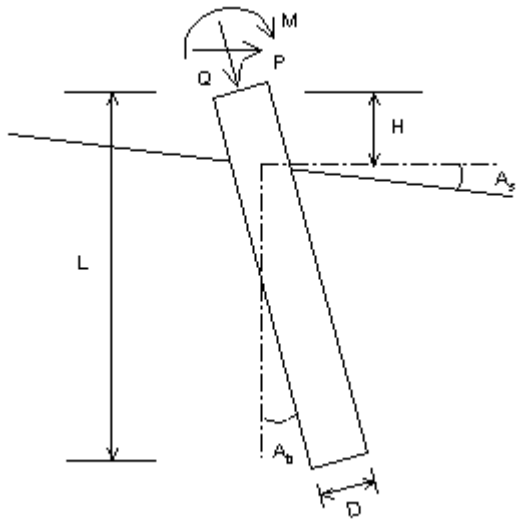

Driving Steel Pile (Open end)

Loads:

Load Factor for Vertical Loads= 1.0
Load Factor for Lateral Loads= 1.0
Loads Supported by Pile Cap= 0 %
Shear Condition: Cyclic
Number of Cycles: 100
Vertical Load, Q= 0.0 -kp
Shear Load, P= 12.0 -kp
Moment, M= 0.0 -kp-f

Profile:

Pile Length, L= 30.0 -ft
Top Height, H= 1 -ft
Slope Angle, As= 0.0
Batter Angle, Ab= 0.0

Free Head Condition

Soil Data:

Depth -ft	Gamma -lb/f3	Phi	C -kp/f2	K -lb/i3	e50 or Dr %	Nspt
0	128	29	.010	120.3	0.92	9
6	131	31	.010	193.8	0.75	13
35	131	31	.010	187.5	0.76	13

Pile Data:

Depth -ft	Width -in	Area -in2	Per. -in	I -in4	E -kp/i2	Weight -kp/f
0.0	12.75	19.2	40.1	356.4	29000	0.065
30.0	12.75	19.2	37.7	117.3	29000	.023

Single Pile Lateral Analysis:

Top Deflection, yt= 0.55200-in
Max. Moment, M= 59.67-kp-f
Top Deflection Slope, St= -0.00687
OK! Top Deflection, 0.5520-in is less than the Allowable Deflection= 1.00-in

Note: If program can't find result or the result exceeds the up limits. The result shows 9999.
The Max. Moment calculated by program is an internal force from the applied load conditions. Structural engineer has to check whether the pile has enough capacity to resist the moment with adequate factor of safety. If not, the pile may fail under the load conditions.

LATERAL ANALYSIS

12.75x25'x0.500wall Float Anchor

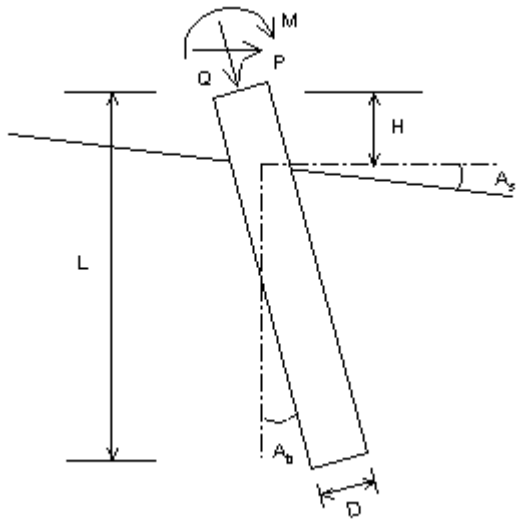

Driving Steel Pile (Open end)

Loads:

Load Factor for Vertical Loads= 1.0
Load Factor for Lateral Loads= 1.0
Loads Supported by Pile Cap= 0 %
Shear Condition: Cyclic
Number of Cycles: 100
Vertical Load, Q= 0.0 -kp
Shear Load, P= 12.0 -kp
Moment, M= 0.0 -kp-f

Profile:

Pile Length, L= 25.0 -ft
Top Height, H= 1 -ft
Slope Angle, As= 0.0
Batter Angle, Ab= 0.0

Free Head Condition

Soil Data:

Depth -ft	Gamma -lb/f3	Phi	C -kp/f2	K -lb/i3	e50 or Dr %	Nspt
0	128	29	.010	120.3	0.92	9
6	131	31	.010	193.8	0.75	13
35	131	31	.010	187.5	0.76	13

Pile Data:

Depth -ft	Width -in	Area -in2	Per. -in	I -in4	E -kp/i2	Weight -kp/f
0.0	12.75	19.2	40.1	356.4	29000	0.065
25.0	12.75	19.2	40.1	356.4	29000	0.065

Single Pile Lateral Analysis:

Top Deflection, yt= 0.55000-in
Max. Moment, M= 59.67-kp-f
Top Deflection Slope, St= -0.00686
OK! Top Deflection, 0.5500-in is less than the Allowable Deflection= 1.00-in

Note: If program can't find result or the result exceeds the up limits. The result shows 9999.
The Max. Moment calculated by program is an internal force from the applied load conditions. Structural engineer has to check whether the pile has enough capacity to resist the moment with adequate factor of safety. If not, the pile may fail under the load conditions.

LATERAL ANALYSIS 12.75" x 20' x 0.500 wall Float Anchor

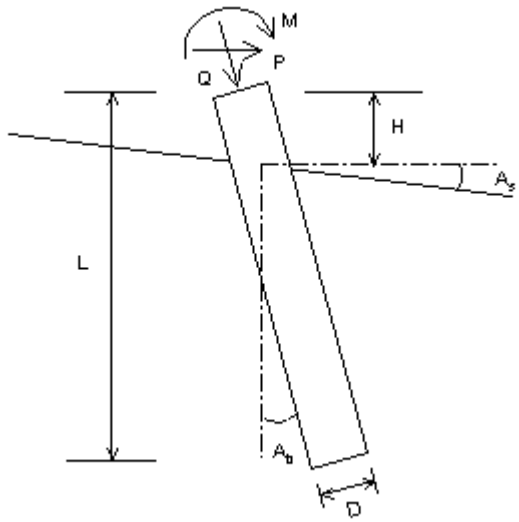

Driving Steel Pile (Open end)

Loads:
Load Factor for Vertical Loads= 1.0
Load Factor for Lateral Loads= 1.0
Loads Supported by Pile Cap= 0 %
Shear Condition: Cyclic
Number of Cycles: 100
Vertical Load, Q= 0.0 -kp
Shear Load, P= 12.0 -kp
Moment, M= 0.0 -kp-f

Profile:
Pile Length, L= 20.0 -ft
Top Height, H= 1 -ft
Slope Angle, As= 0.0
Batter Angle, Ab= 0.0

Free Head Condition

Soil Data:

Depth -ft	Gamma -lb/f3	Phi	C -kp/f2	K -lb/i3	e50 or Dr %	Nspt
0	128	29	.010	120.3	0.92	9
6	131	31	.010	193.8	0.75	13
35	131	31	.010	187.5	0.76	13

Pile Data:

Depth -ft	Width -in	Area -in2	Per. -in	I -in4	E -kp/i2	Weight -kp/f
0.0	12.75	19.2	40.1	356.4	29000	0.065
20.0	12.75	19.2	40.1	356.4	29000	0.065

Single Pile Lateral Analysis:
Top Deflection, yt= 0.55100-in
Max. Moment, M= 59.67-kp-f
Top Deflection Slope, St= -0.00686
OK! Top Deflection, 0.5510-in is less than the Allowable Deflection= 1.00-in

Note: If program can't find result or the result exceeds the up limits. The result shows 9999.
The Max. Moment calculated by program is an internal force from the applied load conditions. Structural engineer has to check whether the pile has enough capacity to resist the moment with adequate factor of safety. If not, the pile may fail under the load conditions.

VERTICAL ANALYSIS

12.75"x30'x0.500 Float Anchor

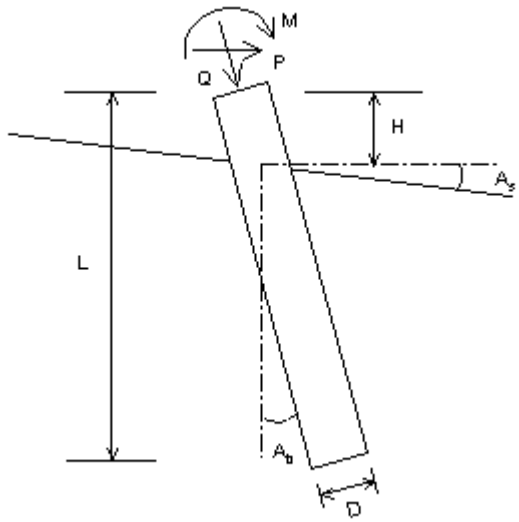

Driving Steel Pile (Open end)

Loads:

Load Factor for Vertical Loads= 1.0
Load Factor for Lateral Loads= 1.0
Loads Supported by Pile Cap= 0 %
Shear Condition: Cyclic
Number of Cycles: 100
Vertical Load, Q= 0.0 -kp
Shear Load, P= 0.0 -kp
Moment, M= 0.0 -kp-f

Profile:

Pile Length, L= 30.0 -ft
Top Height, H= 1 -ft
Slope Angle, As= 0.0
Batter Angle, Ab= 0.0

Free Head Condition

Soil Data:

Depth -ft	Gamma -lb/f3	Phi	C -kp/f2	K -lb/i3	e50 or Dr %	Nspt
0	128	29	.010	120.3	0.92	9
6	131	31	.010	193.8	0.75	13
35	131	31	.010	187.5	0.76	13

Pile Data:

Depth -ft	Width -in	Area -in2	Per. -in	I -in4	E -kp/i2	Weight -kp/f
0.0	12.75	19.2	40.1	356.4	29000	0.065
30.0	12.75	19.2	37.7	117.3	29000	.023

Vertical capacity:

Weight above Ground= 0.06 Total Weight= 0.35-kp *Soil Weight is not included
Side Resistance (Down)= 62.597-kp Side Resistance (Up)= 31.783-kp
Tip Resistance (Down)= 9.090-kp Tip Resistance (Up)= 0.000-kp
Total Ultimate Capacity (Down)= 71.686-kp Total Ultimate Capacity (Up)= 32.128-kp
Total Allowable Capacity (Down)= 46.276-kp Total Allowable Capacity (Up)= 16.237-kp
OK! Qallow > Q

Settlement Calculation:

At Q= 0.00-kp Settlement= 0.00000-in
At Xallow= 1.00-in Qallow= 9999.00000-kp

Note: If program can't find result or the result exceeds the up limits. The result shows 9999.

VERTICAL ANALYSIS

12.75"x25'x0.500wall Float Anchor

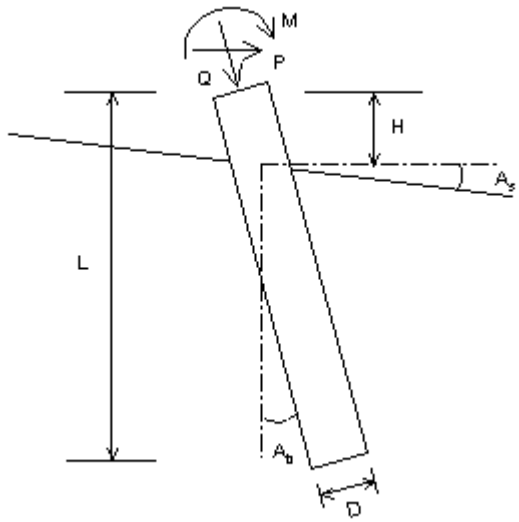

Driving Steel Pile (Open end)

Loads:

Load Factor for Vertical Loads= 1.0
Load Factor for Lateral Loads= 1.0
Loads Supported by Pile Cap= 0 %
Shear Condition: Cyclic
Number of Cycles: 100
Vertical Load, Q= 0.0 -kp
Shear Load, P= 0.0 -kp
Moment, M= 0.0 -kp-f

Profile:

Pile Length, L= 25.0 -ft
Top Height, H= 1 -ft
Slope Angle, As= 0.0
Batter Angle, Ab= 0.0

Free Head Condition

Soil Data:

Depth -ft	Gamma -lb/f3	Phi	C -kp/f2	K -lb/i3	e50 or Dr %	Nspt
0	128	29	.010	120.3	0.92	9
6	131	31	.010	193.8	0.75	13
35	131	31	.010	187.5	0.76	13

Pile Data:

Depth -ft	Width -in	Area -in2	Per. -in	I -in4	E -kp/i2	Weight -kp/f
0.0	12.75	19.2	40.1	356.4	29000	0.065
25.0	12.75	19.2	40.1	356.4	29000	0.065

Vertical capacity:

Weight above Ground= 0.06 Total Weight= 0.30-kp *Soil Weight is not included
Side Resistance (Down)= 45.618-kp Side Resistance (Up)= 23.210-kp
Tip Resistance (Down)= 9.087-kp Tip Resistance (Up)= 0.000-kp
Total Ultimate Capacity (Down)= 54.705-kp Total Ultimate Capacity (Up)= 23.507-kp
Total Allowable Capacity (Down)= 34.955-kp Total Allowable Capacity (Up)= 11.902-kp
OK! Qallow > Q

Settlement Calculation:

At Q= 0.00-kp Settlement= 0.00000-in
At Xallow= 1.00-in Qallow= 9999.00000-kp

Note: If program can't find result or the result exceeds the up limits. The result shows 9999.

VERTICAL ANALYSIS 12.75" x 20' x 0.500 wall Float Anchor

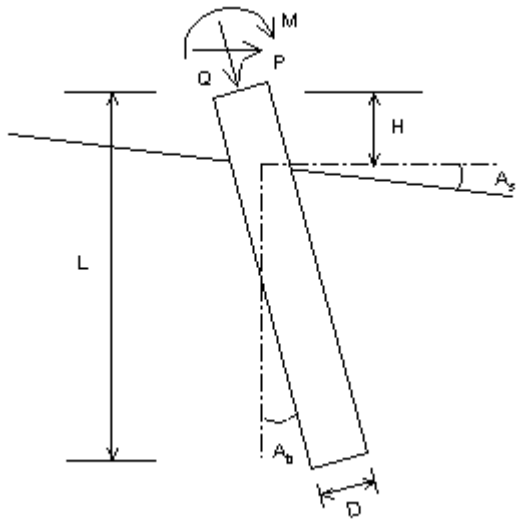

Driving Steel Pile (Open end)

Loads:
Load Factor for Vertical Loads= 1.0
Load Factor for Lateral Loads= 1.0
Loads Supported by Pile Cap= 0 %
Shear Condition: Cyclic
Number of Cycles: 100
Vertical Load, Q= 0.0 -kp
Shear Load, P= 0.0 -kp
Moment, M= 0.0 -kp-f

Profile:
Pile Length, L= 20.0 -ft
Top Height, H= 1 -ft
Slope Angle, As= 0.0
Batter Angle, Ab= 0.0

Free Head Condition

Soil Data:

Depth -ft	Gamma -lb/f3	Phi	C -kp/f2	K -lb/i3	e50 or Dr %	Nspt
0	128	29	.010	120.3	0.92	9
6	131	31	.010	193.8	0.75	13
35	131	31	.010	187.5	0.76	13

Pile Data:

Depth -ft	Width -in	Area -in2	Per. -in	I -in4	E -kp/i2	Weight -kp/f
0.0	12.75	19.2	40.1	356.4	29000	0.065
20.0	12.75	19.2	40.1	356.4	29000	0.065

Vertical capacity:
Weight above Ground= 0.06 Total Weight= 0.25-kp *Soil Weight is not included
Side Resistance (Down)= 29.042-kp Side Resistance (Up)= 14.839-kp
Tip Resistance (Down)= 8.134-kp Tip Resistance (Up)= 0.000-kp
Total Ultimate Capacity (Down)= 37.176-kp Total Ultimate Capacity (Up)= 15.087-kp
Total Allowable Capacity (Down)= 23.428-kp Total Allowable Capacity (Up)= 7.668-kp
OK! Qallow > Q

Settlement Calculation:
At Q= 0.00-kp Settlement= 0.00000-in
At Xallow= 1.00-in Qallow= 9999.00000-kp

Note: If program can't find result or the result exceeds the up limits. The result shows 9999.

PILE DEFLECTION & FORCE vs DEPTH

Single Pile, Khead=2, Kbc=1

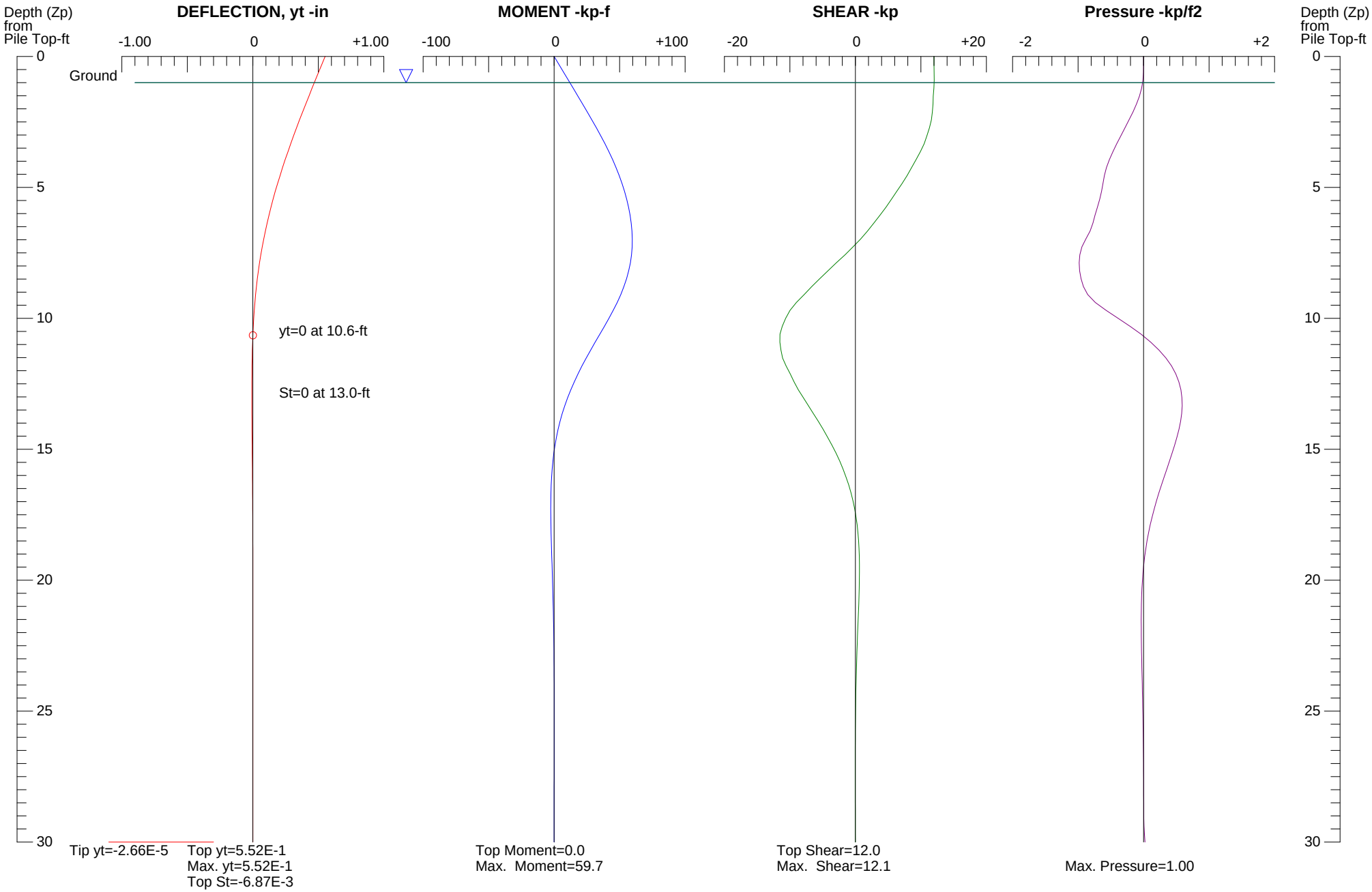

CivilTech Software

Swan Lake Facility Improvement
Kotzebue, AK

12.75x30x0.500 Float Anchor

PILE DEFLECTION & FORCE vs DEPTH

Single Pile, Khead=2, Kbc=1

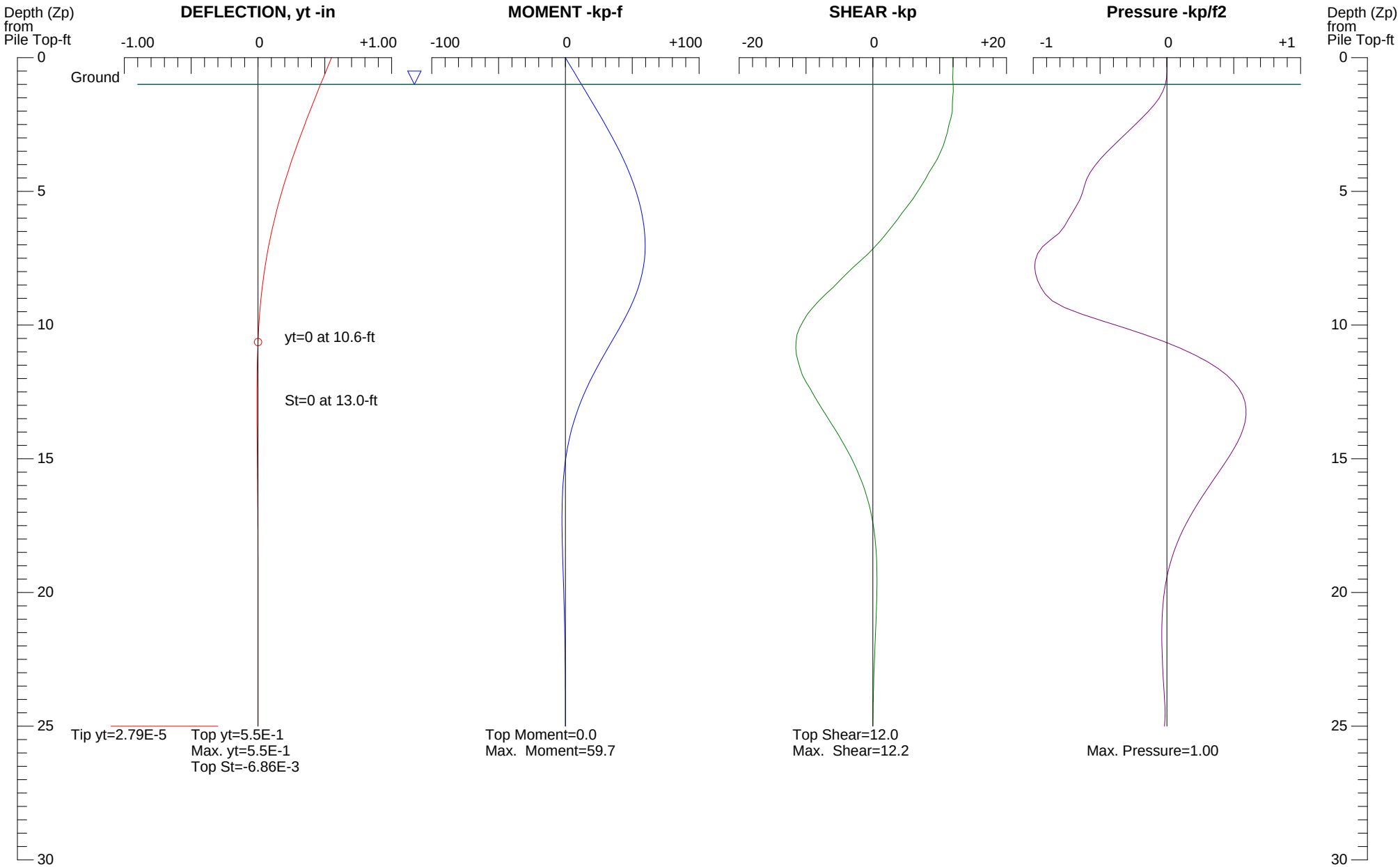

CivilTech Software

Swan Lake Facility Improvement
Kotzebue, AK

12.75"x25'x0.500"Float Anchor

PILE DEFLECTION & FORCE vs DEPTH

Single Pile, Khead=2, Kbc=1

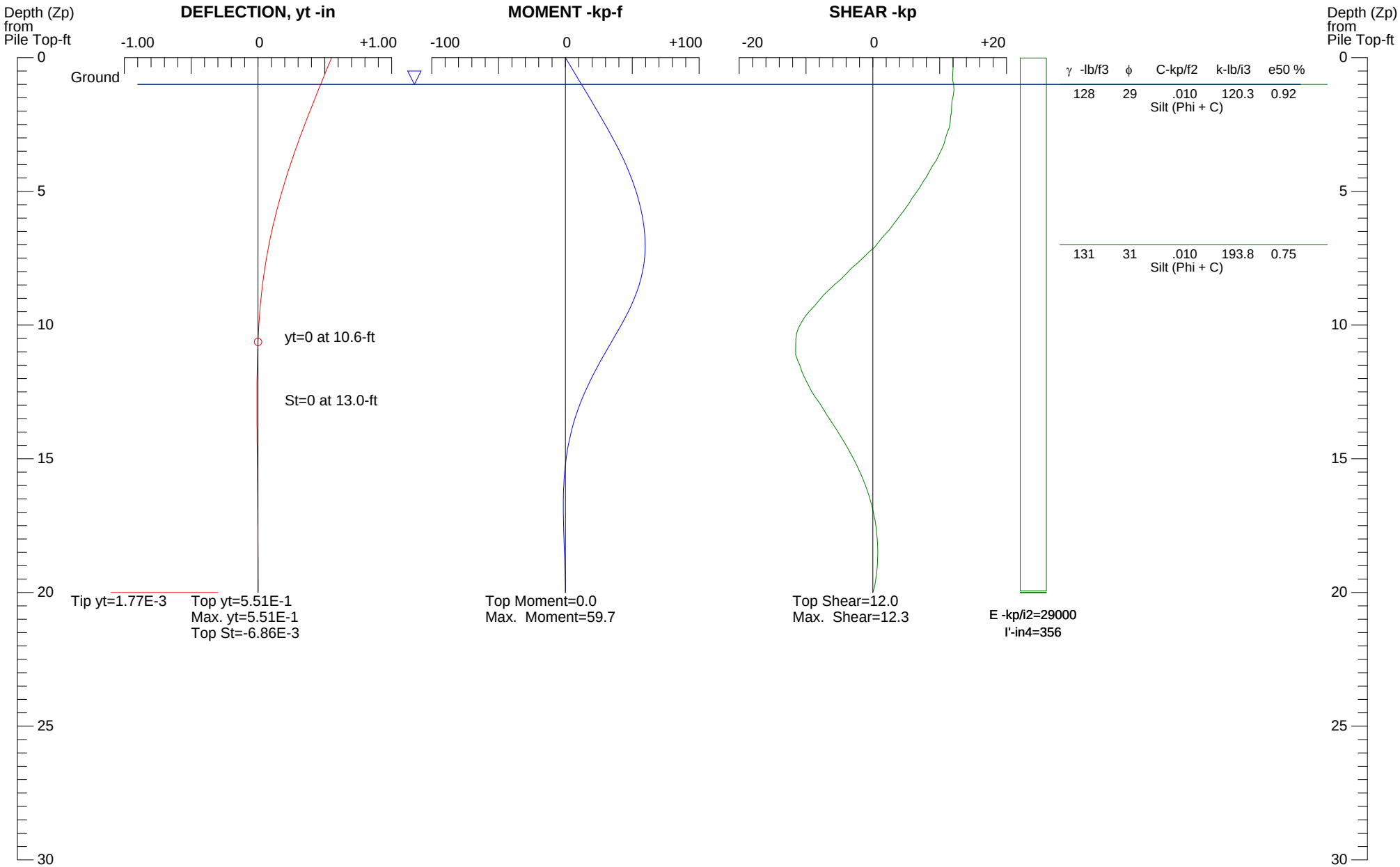

CivilTech Software

Swan Lake Facility Improvement
Kotzebue, AK

12.75"x20'x0.500 Float Anchor

LATERAL ANALYSIS

14 x 30 x .500 wall @ 12 kips

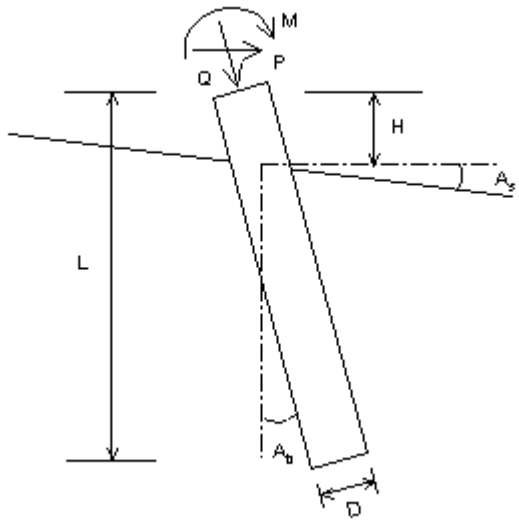

Driving Steel Pile (Open end)

Loads:

Load Factor for Vertical Loads= 1.0
Load Factor for Lateral Loads= 1.0
Loads Supported by Pile Cap= 0 %
Shear Condition: Cyclic
Number of Cycles: 100
Vertical Load, Q= 0.0 -kp
Shear Load, P= 12.0 -kp
Moment, M= 0.0 -kp-f

Profile:

Pile Length, L= 30.0 -ft
Top Height, H= 1 -ft
Slope Angle, As= 0.0
Batter Angle, Ab= 0.0

Free Head Condition

Soil Data:

Depth -ft	Gamma -lb/f3	Phi	C -kp/f2	K -lb/i3	e50 or Dr %	Nspt
0	128	29	.010	120.3	0.92	9
6	131	31	.010	193.8	0.75	13
35	131	31	.010	187.5	0.76	13

Pile Data:

Depth -ft	Width -in	Area -in2	Per. -in	I -in4	E -kp/i2	Weight -kp/f
0.0	14	21.6	44.0	491.0	29000	0.073
30.0	14	21.6	37.7	117.3	29000	.023

Single Pile Lateral Analysis:

Top Deflection, yt= 0.43200-in
Max. Moment, M= 60.33-kp-f
Top Deflection Slope, St= -0.00523
OK! Top Deflection, 0.4320-in is less than the Allowable Deflection= 1.00-in

Note: If program can't find result or the result exceeds the up limits. The result shows 9999.
The Max. Moment calculated by program is an internal force from the applied load conditions. Structural engineer has to check whether the pile has enough capacity to resist the moment with adequate factor of safety. If not, the pile may fail under the load conditions.

LATERAL ANALYSIS

14" x 30' x .375 @ 12 kips

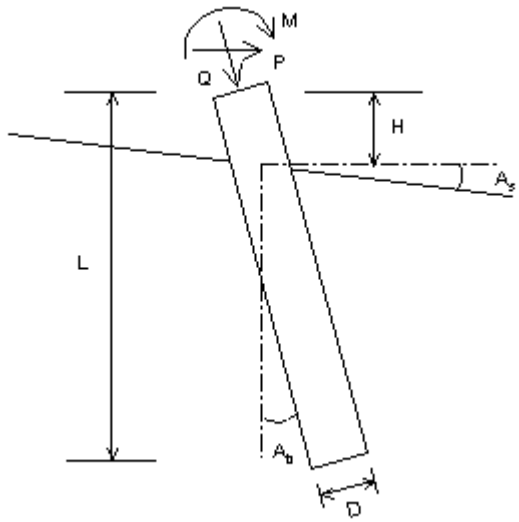

Driving Steel Pile (Open end)

Loads:

Load Factor for Vertical Loads= 1.0
Load Factor for Lateral Loads= 1.0
Loads Supported by Pile Cap= 0 %
Shear Condition: Cyclic
Number of Cycles: 100
Vertical Load, Q= 0.0 -kp
Shear Load, P= 12.0 -kp
Moment, M= 0.0 -kp-f

Profile:

Pile Length, L= 30.0 -ft
Top Height, H= 1 -ft
Slope Angle, As= 0.0
Batter Angle, Ab= 0.0

Free Head Condition

Soil Data:

Depth -ft	Gamma -lb/f3	Phi	C -kp/f2	K -lb/i3	e50 or Dr %	Nspt
0	128	29	.010	120.3	0.92	9
6	131	31	.010	193.8	0.75	13
35	131	31	.010	187.5	0.76	13

Pile Data:

Depth -ft	Width -in	Area -in2	Per. -in	I -in4	E -kp/i2	Weight -kp/f
0.0	14	15.4	44.0	354.7	29000	0.052
30.0	14	15.4	44.0	354.7	29000	0.052

Single Pile Lateral Analysis:

Top Deflection, yt= 0.54600-in
Max. Moment, M= 58.83-kp-f
Top Deflection Slope, St= -0.00682
OK! Top Deflection, 0.5460-in is less than the Allowable Deflection= 1.00-in

Note: If program can't find result or the result exceeds the up limits. The result shows 9999.
The Max. Moment calculated by program is an internal force from the applied load conditions. Structural engineer has to check whether the pile has enough capacity to resist the moment with adequate factor of safety. If not, the pile may fail under the load conditions.

LATERAL ANALYSIS

14" x 30' x .172 wall @ 12 kips

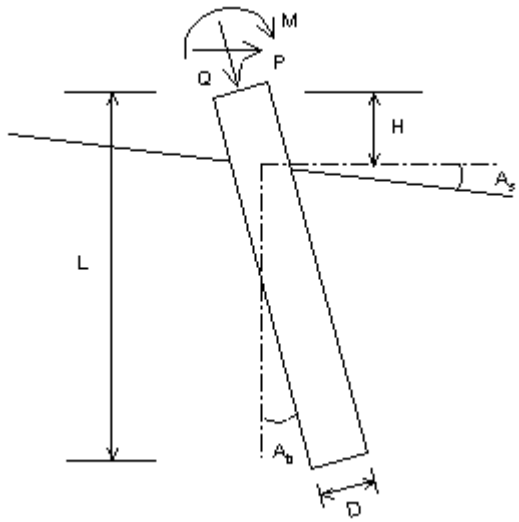

Driving Steel Pile (Open end)

Loads:

Load Factor for Vertical Loads= 1.0
Load Factor for Lateral Loads= 1.0
Loads Supported by Pile Cap= 0 %
Shear Condition: Cyclic
Number of Cycles: 100
Vertical Load, Q= 0.0 -kp
Shear Load, P= 12.0 -kp
Moment, M= 0.0 -kp-f

Profile:

Pile Length, L= 30.0 -ft
Top Height, H= 1 -ft
Slope Angle, As= 0.0
Batter Angle, Ab= 0.0

Free Head Condition

Soil Data:

Depth -ft	Gamma -lb/f3	Phi	C -kp/f2	K -lb/i3	e50 or Dr %	Nspt
0	128	29	.010	120.3	0.92	9
6	131	31	.010	193.8	0.75	13
35	131	31	.010	187.5	0.76	13

Pile Data:

Depth -ft	Width -in	Area -in2	Per. -in	I -in4	E -kp/i2	Weight -kp/f
0.0	14	6.8	37.7	117.3	29000	0.023
30.0	14	6.8	37.7	117.3	29000	.023

Single Pile Lateral Analysis:

Top Deflection, yt= 1.22000-in
Max. Moment, M= 54.25-kp-f
Top Deflection Slope, St= -0.01690
N/G! Top Deflection, 1.2200-in, Exceeds the Allowable Deflection= 1.00-in

Note: If program can't find result or the result exceeds the up limits. The result shows 9999.
The Max. Moment calculated by program is an internal force from the applied load conditions. Structural engineer has to check whether the pile has enough capacity to resist the moment with adequate factor of safety. If not, the pile may fail under the load conditions.

PILE DEFLECTION & FORCE vs DEPTH

Single Pile, Khead=2, Kbc=1

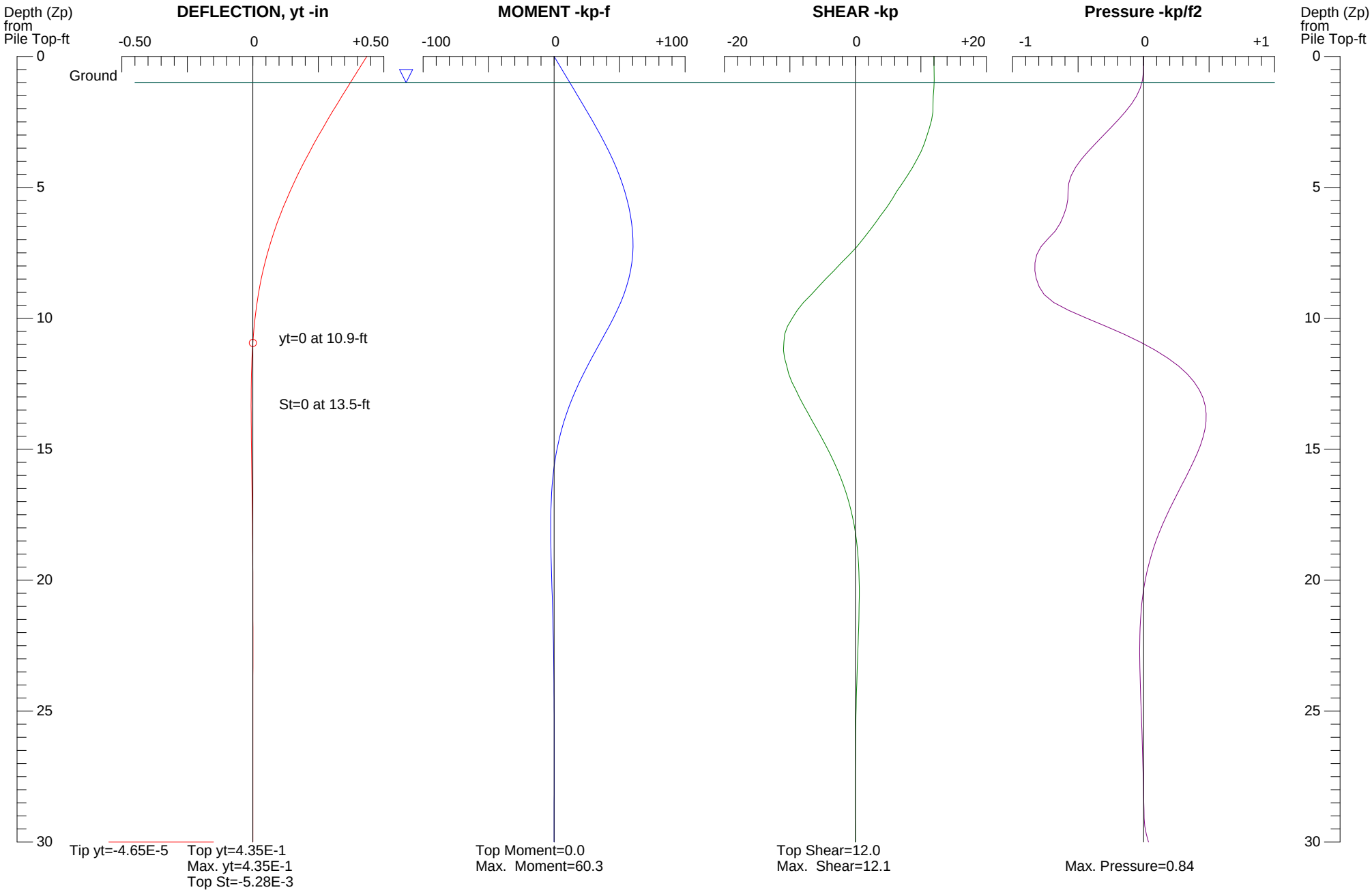

CivilTech Software

Swan Lake Facility Improvement
Kotzebue, AK

14x30x0.50 Float Anchor

PILE DEFLECTION & FORCE vs DEPTH

Single Pile, Khead=2, Kbc=1

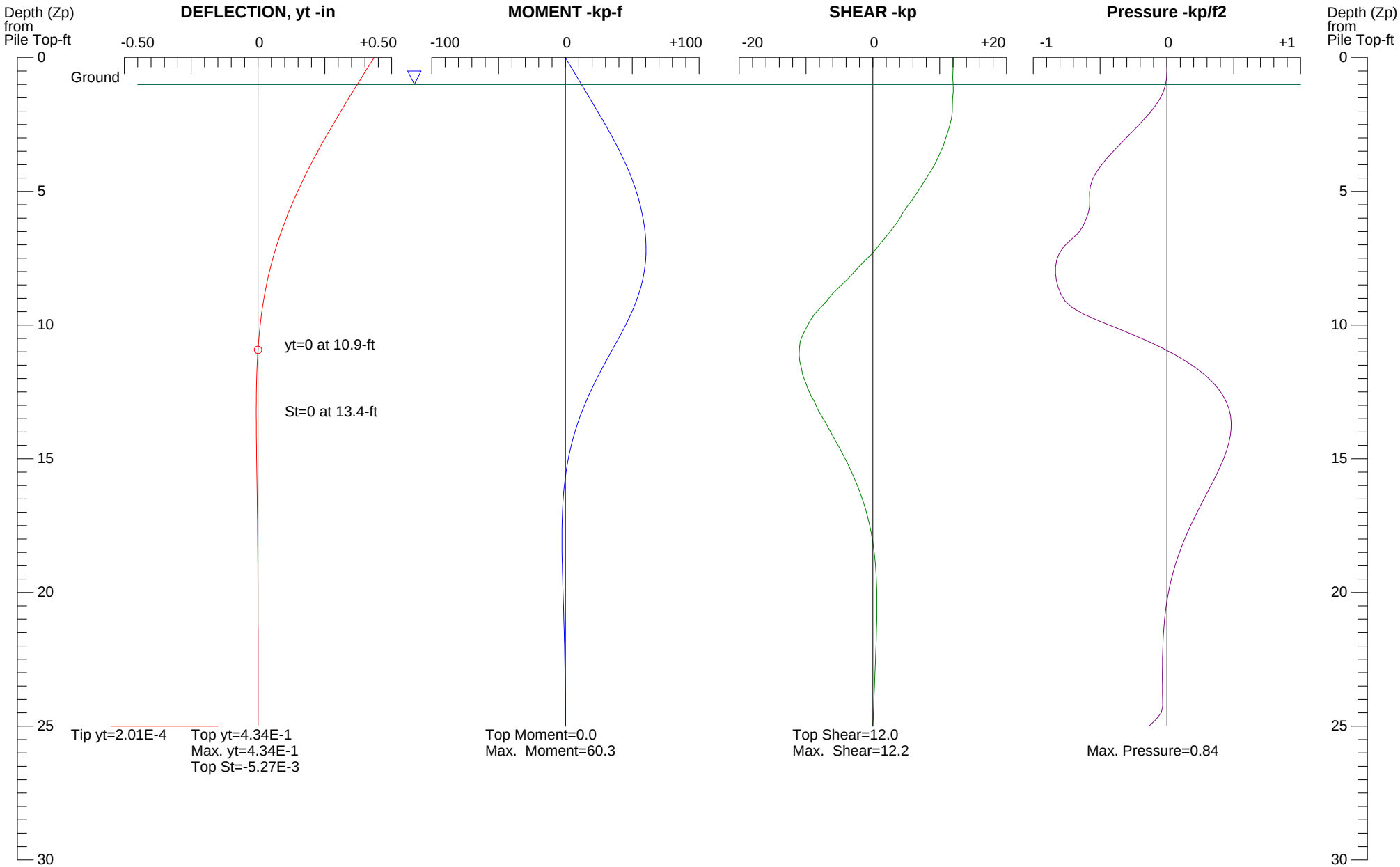

CivilTech Software

Swan Lake Facility Improvement
Kotzebue, AK

14x25x0.500 Float Anchor

PILE DEFLECTION & FORCE vs DEPTH

Single Pile, Khead=2, Kbc=1

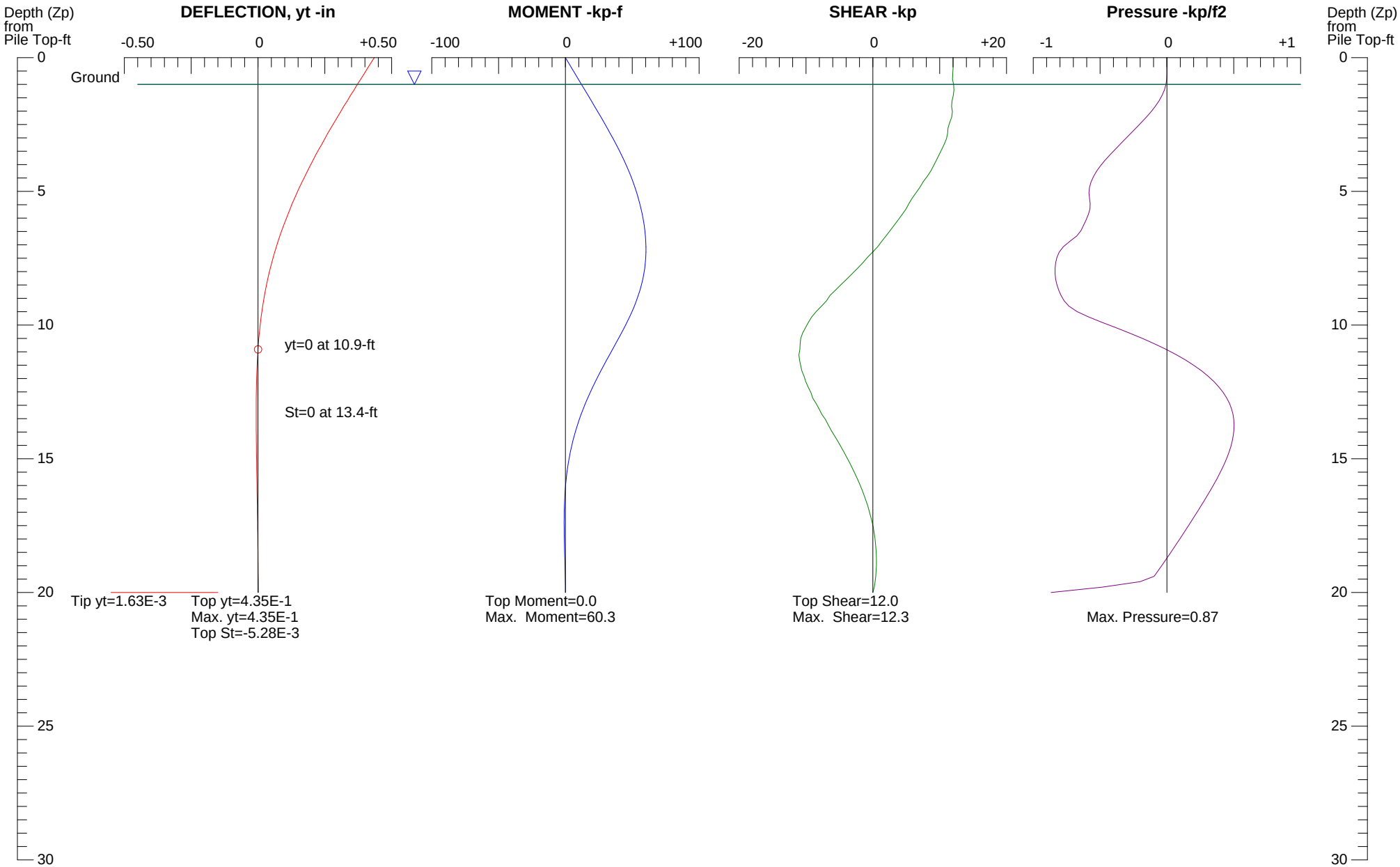

CivilTech Software

Swan Lake Facility Improvement
Kotzebue, AK

14x20x0.50 Float Anchor

VERTICAL ANALYSIS Vertical Capacity 14 x 30 x .172 wall

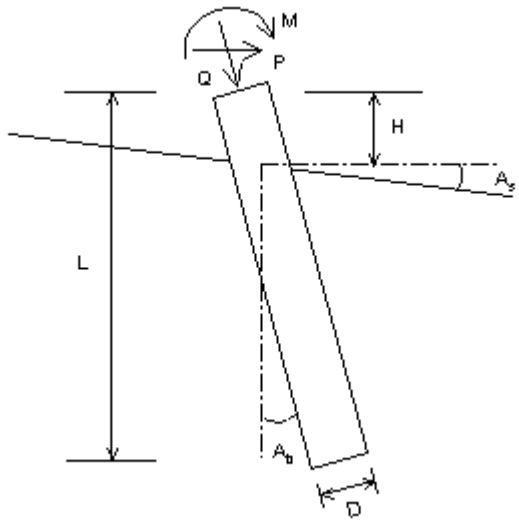

Driving Steel Pile (Open end)

Loads:
Load Factor for Vertical Loads= 1.0
Load Factor for Lateral Loads= 1.0
Loads Supported by Pile Cap= 0 %
Shear Condition: Cyclic
Number of Cycles: 100
Vertical Load, Q= 0.0 -kp
Shear Load, P= 0.0 -kp
Moment, M= 0.0 -kp-f

Profile:
Pile Length, L= 30.0 -ft
Top Height, H= 1 -ft
Slope Angle, As= 0.0
Batter Angle, Ab= 0.0

Free Head Condition

Soil Data:

Depth -ft	Gamma -lb/f3	Phi	C -kp/f2	K -lb/i3	e50 or Dr %	Nspt
0	128	29	.010	120.3	0.92	9
6	131	31	.010	193.8	0.75	13
35	131	31	.010	187.5	0.76	13

Pile Data:

Depth -ft	Width -in	Area -in2	Per. -in	I -in4	E -kp/i2	Weight -kp/f
0.0	14	6.8	37.7	117.3	29000	0.023
30.0	14	6.8	37.7	117.3	29000	.023

Vertical capacity:
Weight above Ground= 0.02 Total Weight= -0.73-kp *Soil Weight is not included
Side Resistance (Down)= 60.954-kp Side Resistance (Up)= 30.933-kp
Tip Resistance (Down)= 3.538-kp Tip Resistance (Up)= 0.000-kp
Total Ultimate Capacity (Down)= 64.492-kp Total Ultimate Capacity (Up)= 30.201-kp
Total Allowable Capacity (Down)= 42.405-kp Total Allowable Capacity (Up)= 14.735-kp
OK! Qallow > Q

Settlement Calculation:
At Q= 0.00-kp Settlement= 0.00000-in
At Xallow= 1.00-in Qallow= 9999.00000-kp

Note: If program can't find result or the result exceeds the up limits. The result shows 9999.

VERTICAL ANALYSIS

14" x 30' x 0.375 wall Float Anchor

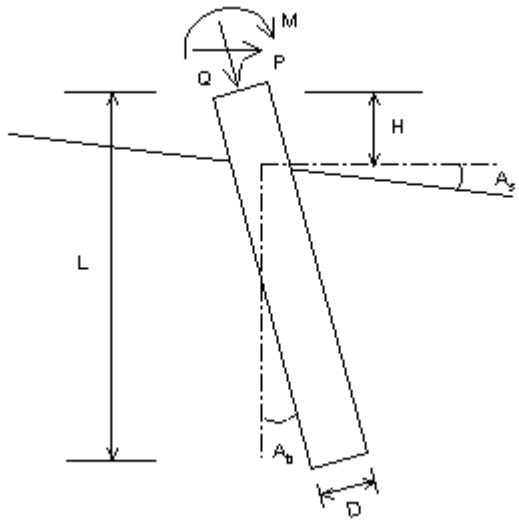

Driving Steel Pile (Open end)

Loads:

Load Factor for Vertical Loads= 1.0
Load Factor for Lateral Loads= 1.0
Loads Supported by Pile Cap= 0 %
Shear Condition: Cyclic
Number of Cycles: 100
Vertical Load, Q= 0.0 -kp
Shear Load, P= 0.0 -kp
Moment, M= 0.0 -kp-f

Profile:

Pile Length, L= 30.0 -ft
Top Height, H= 1 -ft
Slope Angle, As= 0.0
Batter Angle, Ab= 0.0

Free Head Condition

Soil Data:

Depth -ft	Gamma -lb/f3	Phi	C -kp/f2	K -lb/i3	e50 or Dr %	Nspt
0	128	29	.010	120.3	0.92	9
6	131	31	.010	193.8	0.75	13
35	131	31	.010	187.5	0.76	13

Pile Data:

Depth -ft	Width -in	Area -in2	Per. -in	I -in4	E -kp/i2	Weight -kp/f
0.0	14	15.4	44.0	354.7	29000	0.052
30.0	14	15.4	44.0	354.7	29000	0.052

Vertical capacity:

Weight above Ground= 0.05 Total Weight= -0.37-kp *Soil Weight is not included
Side Resistance (Down)= 71.140-kp Side Resistance (Up)= 36.102-kp
Tip Resistance (Down)= 8.012-kp Tip Resistance (Up)= 0.000-kp
Total Ultimate Capacity (Down)= 79.152-kp Total Ultimate Capacity (Up)= 35.728-kp
Total Allowable Capacity (Down)= 51.433-kp Total Allowable Capacity (Up)= 17.677-kp
OK! Qallow > Q

Settlement Calculation:

At Q= 0.00-kp Settlement= 0.00000-in
At Xallow= 1.00-in Qallow= 9999.00000-kp

Note: If program can't find result or the result exceeds the up limits. The result shows 9999.

VERTICAL ANALYSIS

14" x 30' x 0.500 wall Float Anchor

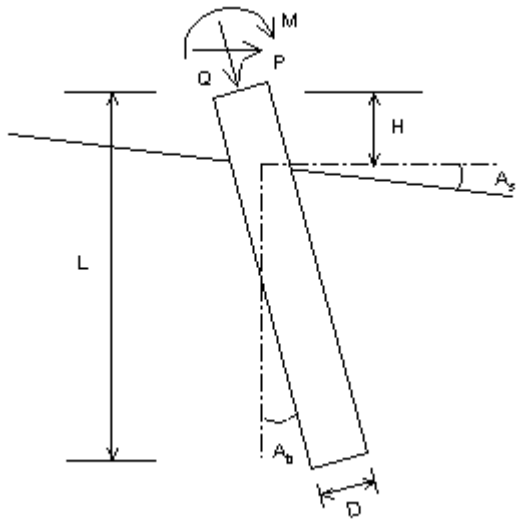

Driving Steel Pile (Open end)

Loads:

Load Factor for Vertical Loads= 1.0
Load Factor for Lateral Loads= 1.0
Loads Supported by Pile Cap= 0 %
Shear Condition: Cyclic
Number of Cycles: 100
Vertical Load, Q= 0.0 -kp
Shear Load, P= 0.0 -kp
Moment, M= 0.0 -kp-f

Profile:

Pile Length, L= 30.0 -ft
Top Height, H= 1 -ft
Slope Angle, As= 0.0
Batter Angle, Ab= 0.0

Free Head Condition

Soil Data:

Depth -ft	Gamma -lb/f3	Phi	C -kp/f2	K -lb/i3	e50 or Dr %	Nspt
0	128	29	.010	120.3	0.92	9
6	131	31	.010	193.8	0.75	13
35	131	31	.010	187.5	0.76	13

Pile Data:

Depth -ft	Width -in	Area -in2	Per. -in	I -in4	E -kp/i2	Weight -kp/f
0.0	14	21.6	44.0	486.1	29000	0.073
30.0	14	21.6	44.0	486.1	29000	0.073

Vertical capacity:

Weight above Ground= 0.07 Total Weight= 0.26-kp *Soil Weight is not included
Side Resistance (Down)= 71.140-kp Side Resistance (Up)= 36.102-kp
Tip Resistance (Down)= 11.238-kp Tip Resistance (Up)= 0.000-kp
Total Ultimate Capacity (Down)= 82.378-kp Total Ultimate Capacity (Up)= 36.358-kp
Total Allowable Capacity (Down)= 53.046-kp Total Allowable Capacity (Up)= 18.307-kp
OK! Qallow > Q

Settlement Calculation:

At Q= 0.00-kp Settlement= 0.00000-in
At Xallow= 1.00-in Qallow= 9999.00000-kp

Note: If program can't find result or the result exceeds the up limits. The result shows 9999.

VERTICAL ANALYSIS

14 x 25 x 0.500 Float Anchor

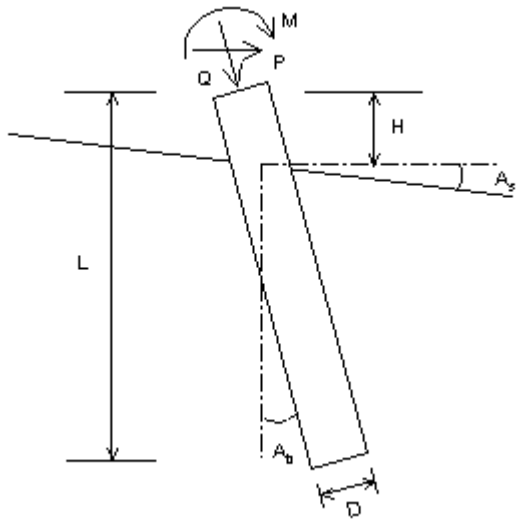

Driving Steel Pile (Open end)

Loads:

Load Factor for Vertical Loads= 1.0
Load Factor for Lateral Loads= 1.0
Loads Supported by Pile Cap= 0 %
Shear Condition: Cyclic
Number of Cycles: 100
Vertical Load, Q= 0.0 -kp
Shear Load, P= 0.0 -kp
Moment, M= 0.0 -kp-f

Profile:

Pile Length, L= 25.0 -ft
Top Height, H= 1 -ft
Slope Angle, As= 0.0
Batter Angle, Ab= 0.0

Free Head Condition

Soil Data:

Depth -ft	Gamma -lb/f3	Phi	C -kp/f2	K -lb/i3	e50 or Dr %	Nspt
0	128	29	.010	120.3	0.92	9
6	131	31	.010	193.8	0.75	13
35	131	31	.010	187.5	0.76	13

Pile Data:

Depth -ft	Width -in	Area -in2	Per. -in	I -in4	E -kp/i2	Weight -kp/f
0.0	14	21.6	44.0	486.1	29000	0.073
25.0	14	21.6	44.0	486.1	29000	0.073

Vertical capacity:

Weight above Ground= 0.07 Total Weight= 0.22-kp *Soil Weight is not included
Side Resistance (Down)= 50.686-kp Side Resistance (Up)= 25.783-kp
Tip Resistance (Down)= 11.247-kp Tip Resistance (Up)= 0.000-kp
Total Ultimate Capacity (Down)= 61.933-kp Total Ultimate Capacity (Up)= 26.008-kp
Total Allowable Capacity (Down)= 39.414-kp Total Allowable Capacity (Up)= 13.116-kp
OK! Qallow > Q

Settlement Calculation:

At Q= 0.00-kp Settlement= 0.00000-in
At Xallow= 1.00-in Qallow= 9999.00000-kp

Note: If program can't find result or the result exceeds the up limits. The result shows 9999.

VERTICAL ANALYSIS

14x20x0.50 Float Anchor

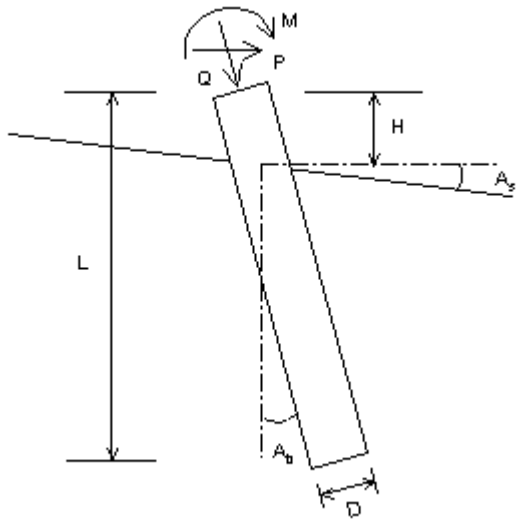

Driving Steel Pile (Open end)

Loads:

Load Factor for Vertical Loads= 1.0
Load Factor for Lateral Loads= 1.0
Loads Supported by Pile Cap= 0 %
Shear Condition: Cyclic
Number of Cycles: 100
Vertical Load, Q= 0.0 -kp
Shear Load, P= 0.0 -kp
Moment, M= 0.0 -kp-f

Profile:

Pile Length, L= 20.0 -ft
Top Height, H= 1 -ft
Slope Angle, As= 0.0
Batter Angle, Ab= 0.0

Free Head Condition

Soil Data:

Depth -ft	Gamma -lb/f3	Phi	C -kp/f2	K -lb/i3	e50 or Dr %	Nspt
0	128	29	.010	120.3	0.92	9
6	131	31	.010	193.8	0.75	13
35	131	31	.010	187.5	0.76	13

Pile Data:

Depth -ft	Width -in	Area -in2	Per. -in	I -in4	E -kp/i2	Weight -kp/f
0.0	14	21.6	44.0	486.1	29000	0.073
20.0	14	21.6	44.0	486.1	29000	0.073

Vertical capacity:

Weight above Ground= 0.07 Total Weight= 0.19-kp *Soil Weight is not included
Side Resistance (Down)= 31.867-kp Side Resistance (Up)= 16.282-kp
Tip Resistance (Down)= 9.151-kp Tip Resistance (Up)= 0.000-kp
Total Ultimate Capacity (Down)= 41.017-kp Total Ultimate Capacity (Up)= 16.475-kp
Total Allowable Capacity (Down)= 25.820-kp Total Allowable Capacity (Up)= 8.334-kp
OK! Qallow > Q

Settlement Calculation:

At Q= 0.00-kp Settlement= 0.00000-in
At Xallow= 1.00-in Qallow= 9999.00000-kp

Note: If program can't find result or the result exceeds the up limits. The result shows 9999.

Project: Swan Lake Facility Improvement, Kotzebue, AK
Project Number: 26220926
10-Jun-11
by Weyrauch

Timber Float Anchor Loads

Timber Float Anchor Loads

CASE 1 6 kip load down 12 % slope + 3 kip load transverse to the slope
Assume down slope direction is 0 degrees and transverse direction is 90 degrees
Assume worst case load is downslope rather than upslope

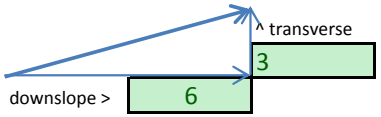

Step 1	Resolve concurrent loads into one load, vector analysis				
Step 2	Magnitude is:	6.71	kips		
Step 3	Direction is:	26.6	degrees from downslope		
Step 4	Slope gradient:	8.5	% slope in direction of load vector = 4.9 degrees		
Step 5	Moment is:	13.4	kip-ft @	2	ft
Step 6	Moment is:	67.1	kip-ft	10	ft

CASE 2 8 kip load down 12 % slope + 4 kip load transverse to the slope
Assume down slope direction is 0 degrees and transverse direction is 90 degrees
Assume worst case load is downslope rather than upslope

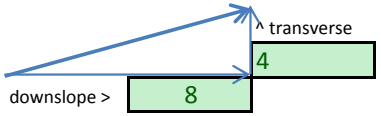

Step 1	Resolve concurrent loads into one load, vector analysis				
Step 2	Magnitude is:	8.94	kips		
Step 3	Direction is:	26.6	degrees from downslope		
Step 4	Slope gradient:	8.5	% slope in direction of load vector = 4.9 degrees		
Step 5	Moment is:	17.9	kip-ft @	2	ft
Step 6	Moment is:	89.4	kip-ft	10	ft

Project: Swan Lake Facility Improvement
Project #: 26220926

Project: Swan Lake Facility Improvement, Kotzebue, AK
Project Number: 26220926
10-Jun-11
by Weyrauch

Timber Float Anchor Loads and Deflection

Soil reaction forces equal shear forces
F=Rt+Rb

Determine Rt and Rb by summing moments about bottom of pile
F*(L+H)=Rt*L Rt=F(L+H)/L Rb=F-Rt

	F	H1 or H2	L	Rt	Rb	Pile Head Deflection (in.)[1] Existing soil[2]	NFS mitigated[3]
F1	6.71	10	35	8.63	-1.92	0.18	0.25
F1	6.71	10	30	8.95	-2.24		
F1	6.71	10	25	9.39	-2.68		
F1		10	20	0.00	0.00		
F1	6.71	2	35	7.09	-0.38	0.13	0.19
F1	6.71	2	30	7.16	-0.45		
F1	6.71	2	25	7.25	-0.54		
F1	6.71	2	20	7.38	-0.67		
F2	8.94	10	35	11.49	-2.55	0.28	0.37
F2	8.94	10	30	11.92	-2.98		
F2	8.94	10	25	12.52	-3.58		
F2	8.94	10	20	13.41	-4.47		
F2	8.94	2	35	9.45	-0.51	0.20	0.28
F2	8.94	2	30	9.54	-0.60		
F2	8.94	2	25	9.66	-0.72		
F2	8.94	2	20	9.83	-0.89		

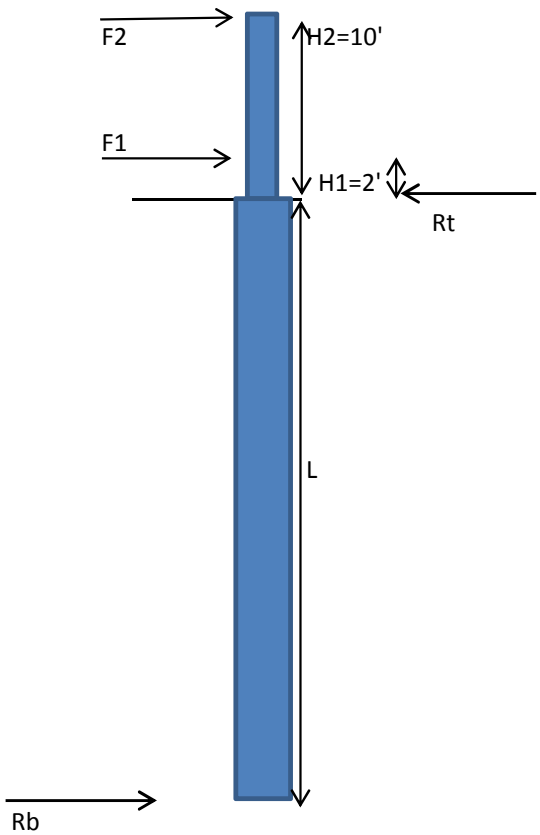

1 Computed using Allpile, based on application of Rt only.
2 Based on existing soil conditions, no adfreeze mitigation measures.
3 Based on minimum adfreeze mitigation of poly-sheeting wrap and backfill around pile with pea-rock

Project: Swan Lake Facility Improvement, Kotzebue, AK
Project Number: 26220926
10-Jun-11
by Weyrauch

Timber Float Anchor Adfreeze Loads

Adfreeze load is estimated from the perimeter area exposed to freezing soils times the adfreeze value.
The perimeter area is the pile diameter (B) times (Pi) times the depth of freezing (Df).
Adfreeze values can vary from 10 to 50 psi.

Diameter B (in)	Feeze Depth Df (ft)	Unit Adfreeze (psi)	Adfreeze Jacking (kips)
16	5	50	151
16	5	30	90
16	5	10	30
16	8	50	241
16	8	30	145
16	8	10	48
16	10	50	302
16	10	30	181
16	10	10	60

LATERAL ANALYSIS

16" x 35' Sleeve @ 7.09 kip

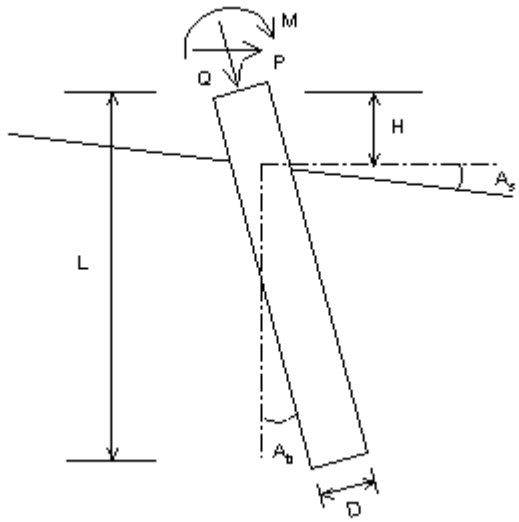

Driving Steel Pile (Closed end)

Loads:

Load Factor for Vertical Loads= 1.0
Load Factor for Lateral Loads= 1.0
Loads Supported by Pile Cap= 0 %
Shear Condition: Static

Vertical Load, Q= 0.0 -kp
Shear Load, P= 7.1 -kp
Moment, M= 0.0 -kp-f

Profile:

Pile Length, L= 35.0 -ft
Top Height, H= 0.0 -ft
Slope Angle, As= 4.9
Batter Angle, Ab= 0

Free Head Condition

Soil Data:

Depth -ft	Gamma -lb/f3	Phi	C -kp/f2	K -lb/i3	e50 or Dr %	Nspt
0	56.9	35.1	0.00	51.2	45.92	15
5	58.8	32.0	0.00	65.1	52.90	19
18	68.6	28.0	0.10	426.3	0.77	12
32.5	74.9	28.0	0.50	1593.1	0.42	34

Pile Data:

Depth -ft	Width -in	Area -in2	Per. -in	I -in4	E -kp/i2	Weight -kp/f
0.0	16	30.7	64.0	1232.1	29000	0.104
35.0						

Single Pile Lateral Analysis:
Top Deflection, yt= 0.13100-in
Max. Moment, M= 30.42-kp-f
Top Deflection Slope, St= -0.00136
OK! Top Deflection, 0.1310-in is less than the Allowable Deflection= 1.00-in

Note: If program can't find result or the result exceeds the up limits. The result shows 9999.
The Max. Moment calculated by program is an internal force from the applied load conditions. Structural engineer has to check whether the pile has enough capacity to resist the moment with adequate factor of safety. If not, the pile may fail under the load conditions.

LATERAL ANALYSIS

16" x 35' Sleeve @ 8.63 kip

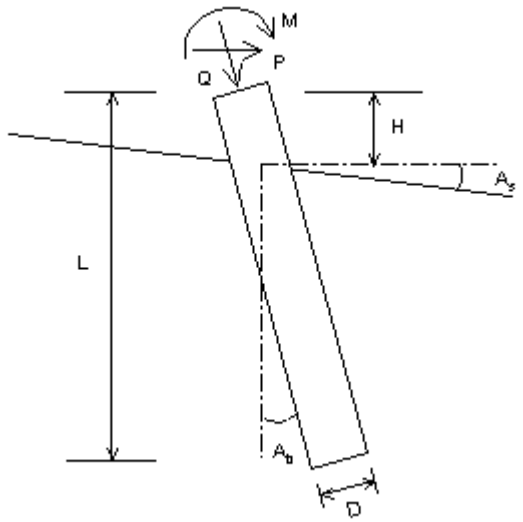

Driving Steel Pile (Closed end)

Loads:

Load Factor for Vertical Loads= 1.0
Load Factor for Lateral Loads= 1.0
Loads Supported by Pile Cap= 0 %
Shear Condition: Static

Vertical Load, Q= 0.0 -kp
Shear Load, P= 8.6 -kp
Moment, M= 0.0 -kp-f

Profile:

Pile Length, L= 35.0 -ft
Top Height, H= 0.0 -ft
Slope Angle, As= 4.9
Batter Angle, Ab= 0

Free Head Condition

Soil Data:

Depth -ft	Gamma -lb/f3	Phi	C -kp/f2	K -lb/i3	e50 or Dr %	Nspt
0	56.9	35.1	0.00	51.2	45.92	15
5	58.8	32.0	0.00	65.1	52.90	19
18	68.6	28.0	0.10	426.3	0.77	12
32.5	74.9	28.0	0.50	1593.1	0.42	34

Pile Data:

Depth -ft	Width -in	Area -in2	Per. -in	I -in4	E -kp/i2	Weight -kp/f
0.0	16	30.7	64.0	1232.1	29000	0.104
35.0						

Single Pile Lateral Analysis:

Top Deflection, yt= 0.17800-in
Max. Moment, M= 39.25-kp-f
Top Deflection Slope, St= -0.00178
OK! Top Deflection, 0.1780-in is less than the Allowable Deflection= 1.00-in

Note: If program can't find result or the result exceeds the up limits. The result shows 9999.
The Max. Moment calculated by program is an internal force from the applied load conditions. Structural engineer has to check whether the pile has enough capacity to resist the moment with adequate factor of safety. If not, the pile may fail under the load conditions.

LATERAL ANALYSIS

16" x 35' Sleeve @ 9.45kip

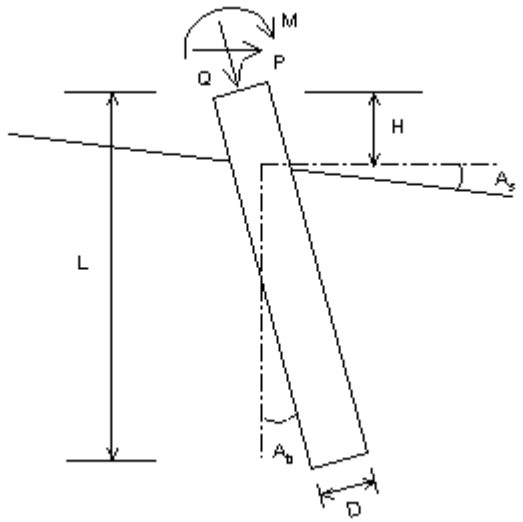

Driving Steel Pile (Closed end)

Loads:

Load Factor for Vertical Loads= 1.0
Load Factor for Lateral Loads= 1.0
Loads Supported by Pile Cap= 0 %
Shear Condition: Static

Vertical Load, Q= 0.0 -kp
Shear Load, P= 9.4 -kp
Moment, M= 0.0 -kp-f

Profile:

Pile Length, L= 35.0 -ft
Top Height, H= 0.0 -ft
Slope Angle, As= 4.9
Batter Angle, Ab= 0

Free Head Condition

Soil Data:

Depth -ft	Gamma -lb/f3	Phi	C -kp/f2	K -lb/i3	e50 or Dr %	Nspt
0	56.9	35.1	0.00	51.2	45.92	15
5	58.8	32.0	0.00	65.1	52.90	19
18	68.6	28.0	0.10	426.3	0.77	12
32.5	74.9	28.0	0.50	1593.1	0.42	34

Pile Data:

Depth -ft	Width -in	Area -in2	Per. -in	I -in4	E -kp/i2	Weight -kp/f
0.0	16	30.7	64.0	1232.1	29000	0.104
35.0						

Single Pile Lateral Analysis:
Top Deflection, yt= 0.20400-in
Max. Moment, M= 44.08-kp-f
Top Deflection Slope, St= -0.00202
OK! Top Deflection, 0.2040-in is less than the Allowable Deflection= 1.00-in

Note: If program can't find result or the result exceeds the up limits. The result shows 9999.
The Max. Moment calculated by program is an internal force from the applied load conditions. Structural engineer has to check whether the pile has enough capacity to resist the moment with adequate factor of safety. If not, the pile may fail under the load conditions.

LATERAL ANALYSIS

16" x 35' Sleeve @ 11.49kip

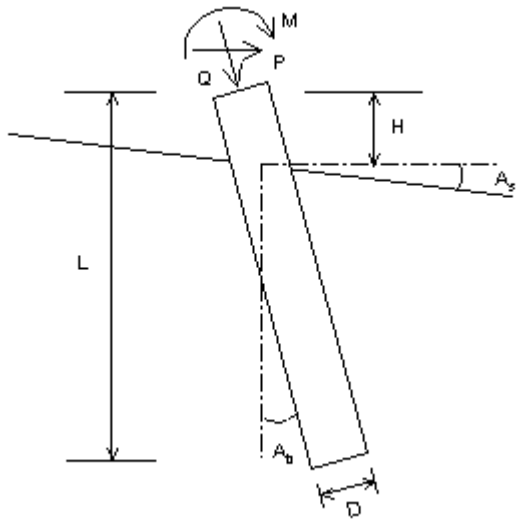

Driving Steel Pile (Closed end)

Loads:

Load Factor for Vertical Loads= 1.0
Load Factor for Lateral Loads= 1.0
Loads Supported by Pile Cap= 0 %
Shear Condition: Static

Vertical Load, Q= 0.0 -kp
Shear Load, P= 11.5 -kp
Moment, M= 0.0 -kp-f

Profile:

Pile Length, L= 35.0 -ft
Top Height, H= 0.0 -ft
Slope Angle, As= 4.9
Batter Angle, Ab= 0

Free Head Condition

Soil Data:

Depth -ft	Gamma -lb/f3	Phi	C -kp/f2	K -lb/i3	e50 or Dr %	Nspt
0	56.9	35.1	0.00	51.2	45.92	15
5	58.8	32.0	0.00	65.1	52.90	19
18	68.6	28.0	0.10	426.3	0.77	12
32.5	74.9	28.0	0.50	1593.1	0.42	34

Pile Data:

Depth -ft	Width -in	Area -in2	Per. -in	I -in4	E -kp/i2	Weight -kp/f
0.0	16	30.7	64.0	1232.1	29000	0.104
35.0						

Single Pile Lateral Analysis:
Top Deflection, yt= 0.27400-in
Max. Moment, M= 56.50-kp-f
Top Deflection Slope, St= -0.00264
OK! Top Deflection, 0.2740-in is less than the Allowable Deflection= 1.00-in

Note: If program can't find result or the result exceeds the up limits. The result shows 9999.
The Max. Moment calculated by program is an internal force from the applied load conditions. Structural engineer has to check whether the pile has enough capacity to resist the moment with adequate factor of safety. If not, the pile may fail under the load conditions.

VERTICAL ANALYSIS

Vertical Capacity 16" x 35' Sleeve

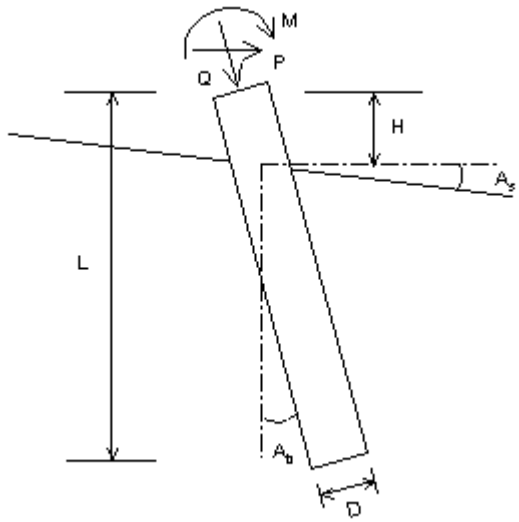

Driving Steel Pile (Closed end)

Loads:

Load Factor for Vertical Loads= 1.0
Load Factor for Lateral Loads= 1.0
Loads Supported by Pile Cap= 0 %
Shear Condition: Static

Vertical Load, Q= -48.0 -kp
Shear Load, P= 0.0 -kp
Moment, M= 0.0 -kp-f

Profile:

Pile Length, L= 35.0 -ft
Top Height, H= 0.0 -ft
Slope Angle, As= 4.9
Batter Angle, Ab= 0

Free Head Condition

Soil Data:

Depth -ft	Gamma -lb/f3	Phi	C -kp/f2	K -lb/i3	e50 or Dr %	Nspt
0	56.9	35.1	0.00	51.2	45.92	15
5	58.8	32.0	0.00	65.1	52.90	19
18	68.6	28.0	0.10	426.3	0.77	12
32.5	74.9	28.0	0.50	1593.1	0.42	34

Pile Data:

Depth -ft	Width -in	Area -in2	Per. -in	I -in4	E -kp/i2	Weight -kp/f
0.0	16	30.7	64.0	1232.1	29000	0.104
35.0						

Vertical capacity:

Weight above Ground= 0.00 Total Weight= -0.24-kp *Soil Weight is not included
Side Resistance (Down)= 95.208-kp Side Resistance (Up)= 61.492-kp
Tip Resistance (Down)= 52.439-kp Tip Resistance (Up)= 0.000-kp
Total Ultimate Capacity (Down)= 147.648-kp Total Ultimate Capacity (Up)= 61.250-kp
Total Allowable Capacity (Down)= 89.692-kp Total Allowable Capacity (Up)= 40.793-kp
N/G! Qallow < Q

Settlement Calculation:

At Q= -48.00-kp Settlement= 0.00092-in
At Xallow= -1.00-in Qallow= 9999.00000-kp

Note: If program can't find result or the result exceeds the up limits. The result shows 9999.

VERTICAL ANALYSIS

16" x 40' Sleeve w/ 10' NFS

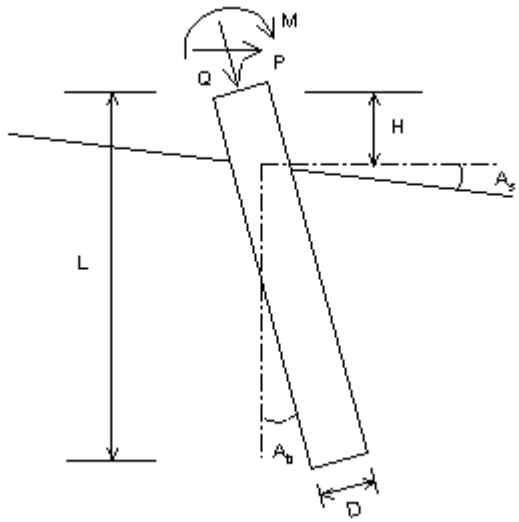

Driving Steel Pile (Closed end)

Loads:

Load Factor for Vertical Loads= 1.0
Load Factor for Lateral Loads= 1.0
Loads Supported by Pile Cap= 0 %
Shear Condition: Static

Vertical Load, Q= 0.0 -kp
Shear Load, P= 0.0 -kp
Moment, M= 0.0 -kp-f

Profile:

Pile Length, L= 40.0 -ft
Top Height, H= 0.0 -ft
Slope Angle, As= 4.9
Batter Angle, Ab= 0

Free Head Condition

Soil Data:

Depth -ft	Gamma -lb/f3	Phi	C -kp/f2	K -lb/i3	e50 or Dr %	Nspt
0	50.2	30	0.00	25.6	29.96	8
10	58.8	32.0	0.00	65.1	52.90	19
18	68.6	28.0	0.10	426.3	0.77	12
32.5	74.9	28.0	0.50	1593.1	0.42	34

Pile Data:

Depth -ft	Width -in	Area -in2	Per. -in	I -in4	E -kp/i2	Weight -kp/f
0.0	16	30.7	64.0	1232.1	29000	0.104
40.0	16	256.0	64.0	5461.3	29000	0.866

Vertical capacity:

Weight above Ground= 0.00 Total Weight= -0.28-kp *Soil Weight is not included
Side Resistance (Down)= 115.529-kp Side Resistance (Up)= 78.899-kp
Tip Resistance (Down)= 50.293-kp Tip Resistance (Up)= 0.000-kp
Total Ultimate Capacity (Down)= 165.822-kp Total Ultimate Capacity (Up)= 78.622-kp
Total Allowable Capacity (Down)= 102.166-kp Total Allowable Capacity (Up)= 52.322-kp
OK! Qallow > Q

Settlement Calculation:

At Q= 0.00-kp Settlement= 0.00000-in
At Xallow= 1.00-in Qallow= 156.17896-kp

Note: If program can't find result or the result exceeds the up limits. The result shows 9999.

VERTICAL ANALYSIS

16" x 45' Sleeve w/ NFS

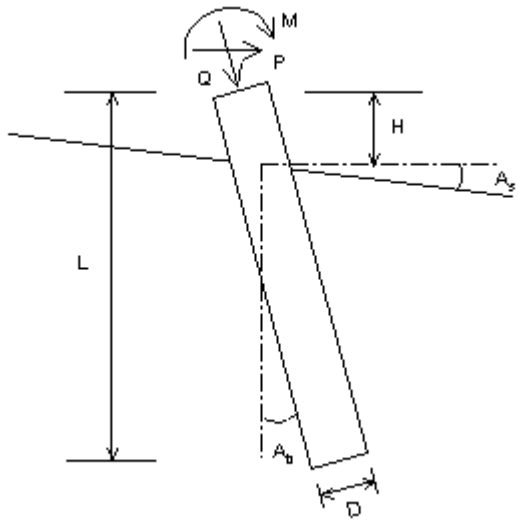

Driving Steel Pile (Closed end)

Loads:

Load Factor for Vertical Loads= 1.0
Load Factor for Lateral Loads= 1.0
Loads Supported by Pile Cap= 0 %
Shear Condition: Static

Vertical Load, Q= 0.0 -kp
Shear Load, P= 0.0 -kp
Moment, M= 0.0 -kp-f

Profile:

Pile Length, L= 45.0 -ft
Top Height, H= 0.0 -ft
Slope Angle, As= 4.9
Batter Angle, Ab= 0

Free Head Condition

Soil Data:

Depth -ft	Gamma -lb/f3	Phi	C -kp/f2	K -lb/i3	e50 or Dr %	Nspt
0	50.2	30	0.00	25.6	29.96	8
10	58.8	32.0	0.00	65.1	52.90	19
18	68.6	28.0	0.10	426.3	0.77	12
32.5	74.9	28.0	0.50	1593.1	0.42	34

Pile Data:

Depth -ft	Width -in	Area -in2	Per. -in	I -in4	E -kp/i2	Weight -kp/f
0.0	16	30.7	64.0	1232.1	29000	0.104
45.0	16	256.0	64.0	5461.3	29000	0.866

Vertical capacity:

Weight above Ground= 0.00 Total Weight= -0.31-kp *Soil Weight is not included
Side Resistance (Down)= 147.063-kp Side Resistance (Up)= 102.841-kp
Tip Resistance (Down)= 50.284-kp Tip Resistance (Up)= 0.000-kp
Total Ultimate Capacity (Down)= 197.346-kp Total Ultimate Capacity (Up)= 102.529-kp
Total Allowable Capacity (Down)= 123.184-kp Total Allowable Capacity (Up)= 68.249-kp
OK! Qallow > Q

Settlement Calculation:

At Q= 0.00-kp Settlement= 0.00000-in
At Xallow= 1.00-in Qallow= 181.65471-kp

Note: If program can't find result or the result exceeds the up limits. The result shows 9999.